TURCK

Industrial
Automation

INTERFACE TECHNOLOGY IN MODULAR HOUSINGS

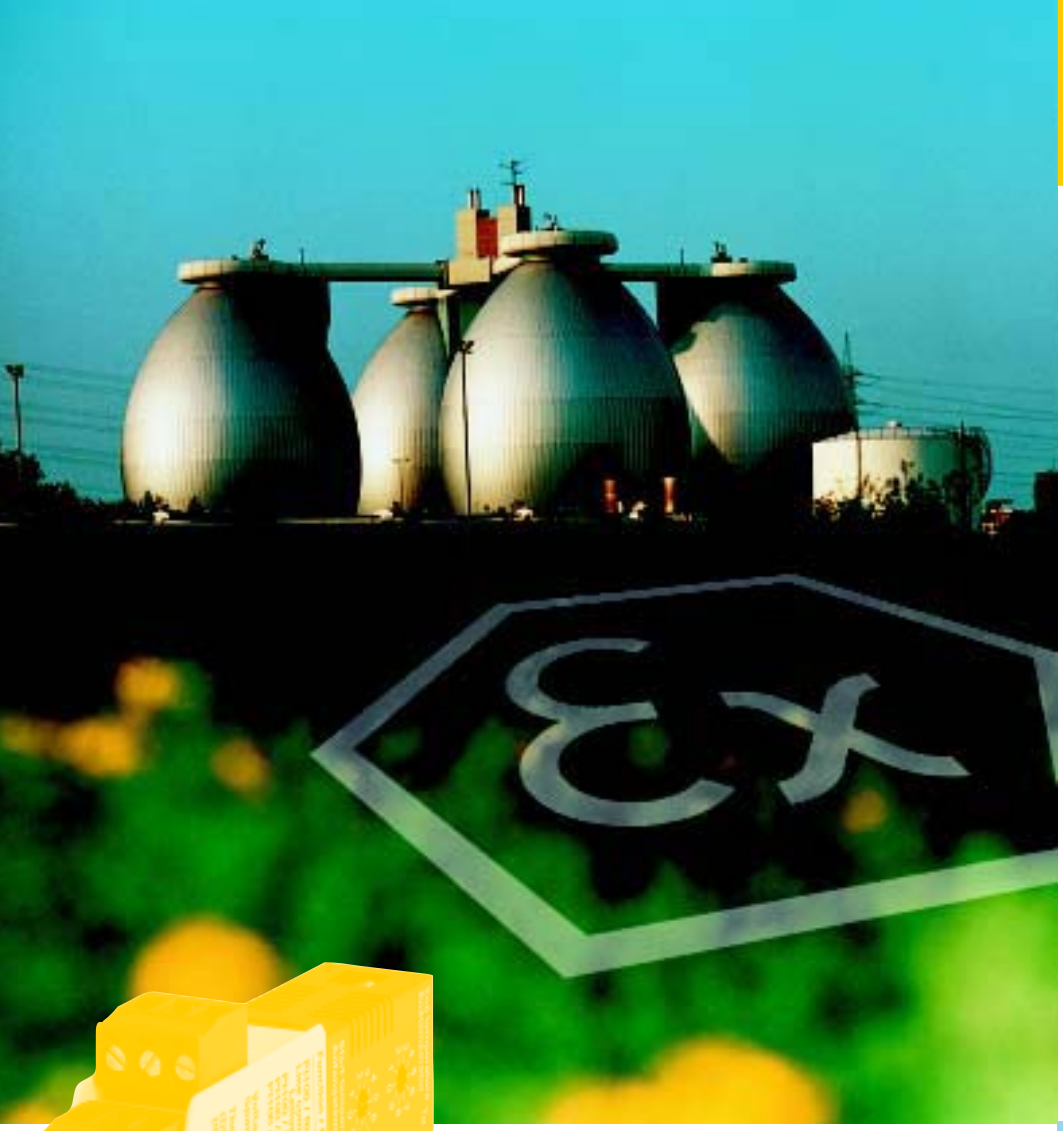

I 423/05

The Company

TURCK is the leading company group in the field of industrial automation. From the very outset, our company was actively involved in supporting the trend of automating manufacturing processes using electronic components.

TURCK products conform to national (DIN) as well as European (EN) and international (IEC) standards, and are manufactured conform to DIN ISO 9001. We manufacture products for the European and international markets at three locations in Germany and one location in Switzerland. We manufacture products for the North-American market in the USA in order to facilitate the special demands of this market. A contributing factor as to why TURCK is the market leader in the inductive sensor field in the USA.

The focus of interest for all TURCK employees is the customer; we endeavour to provide individual solutions. The basis for successful co-operation is formed by the most modern manufacturing technology and a sales network which spans the globe. We offer competent on-location solutions to your problems with more than 2000 employees in 25 countries and representatives in more than 65 countries.

Hans Turck GmbH & Co.KG • D–45466 Mülheim/Ruhr • Tel. 0208/4952-0 • Fax 0208/4952-264 • E-Mail: turckmh@mail.turck-globe.de • www.turck.com

The Programme

Interface technology means isolating, converting, processing and matching of signals in all areas of control and automation technology. Regardless of if its a modular housing for top-hat rail mounting or a 19“ card for a rack, TURCK offers the most effective solution for almost every application.

The “Interface Technology in Modular Housings” includes devices in the ***interfacemodul***, ***multimodul*** and ***multisafe®*** housings.

If you are looking for interface technology on a 19“ card, the ***multicart®*** series is the ideal solution. Please request the “Interface Technology on 19“ Card” catalogue.

The ***interfacemodul*** series offers a host of new features such as removable terminal blocks, universal power supply, a common housing concept as well as parameterisation via PACT*ware*™.

Further advantage result for the user, e.g. simplified connection and exchange of devices, reduced inventory costs and universal application in many countries on the globe.

A focal point of the “Interface Technology in Modular Housings” is the availability of the respective equipment for explosion hazardous area in the “intrinsic safety i” protection class. The particularly wide-ranging offer includes the spectrum of tasks from isolating switching amplifiers with optionally input circuit monitoring and differing numbers of channels, to rotational speed monitors for monitoring of rotating

or oscillating movements, valve control elements for switching of valves or other power converters in explosion hazardous areas.

TURCK interface devices in modular housings are approved without exception conform to the Ex-guideline 94/9/EG (ATEX). This ensures possible use in all EU countries.

Bitte senden Sie mir Unterlagen:

Sensortechnik
- ❑ Induktive Sensoren
- ❑ *uprox®* induktive Sensoren
- ❑ Induktive Sensoren für Schwenkantriebe
- ❑ Magnetfeldsensoren
- ❑ Opto-Sensoren
- ❑ Geräte für den Personenschutz
- ❑ Kapazitive Sensoren
- ❑ Ultraschallsensoren
- ❑ Strömungssensoren
- ❑ Drucksensoren
- ❑ Füllstandssensoren *levelprox®*
- ❑ Temperatursensoren
- ❑ Identifikationssysteme
- ❑ Linearwegsensoren
- ❑ Drehwegsensoren
- ❑ Steckverbinder
- ❑ CD-ROM Sensortechnik

Prozessautomation
- ❑ Interfacetechnik im Aufbaugehäuse für Hutschiene (DIN 50022), Platten- oder Bodenmontage
- ❑ Interfacetechnik auf 19"-Karte für Baugruppenträger (DIN 41494)
- ❑ CD-ROM Interfacetechnik
- ❑ Remote-I/O-System *excom®*
- ❑ Segmentkoppler
- ❑ FOUNDATION™ fieldbus Feldbuskomponenten
- ❑ PROFIBUS-PA Feldbuskomponenten
- ❑ Multibarriere
- ❑ Feldbussystem *sensoplex®2/2 Ex*
- ❑ Miniaturrelais, Industrierelais, Zeitwürfel, Sockel
- ❑ Zeit- und Überwachungsrelais
- ❑ Ex-Schutz – Grundlagen für die Praxis (Übersichtsposter)

Feldbustechnik für die Fabrikautomation
- ❑ Kompakte Feldbuskomponenten PROFIBUS-DP/DeviceNet™/ Ethernet
- ❑ *piconet®* – modulares Feldbus-I/O-System in IP67
- ❑ BL67 – modulares Feldbus-I/O-System in IP67
- ❑ BL20 – modulares Feldbus-I/O-System in IP20

Please send me more information:

Sensors
- ❑ inductive sensors
- ❑ *uprox®* inductive sensors
- ❑ inductive sensors for rotary actuators
- ❑ magnetic-field sensors
- ❑ photoelectric sensors
- ❑ machine safety equipment
- ❑ capacitive sensors
- ❑ ultrasonic sensors
- ❑ flow sensors
- ❑ pressure sensors
- ❑ level sensors *levelprox®*
- ❑ temperature sensors
- ❑ identification systems
- ❑ linear position sensors
- ❑ rotary position sensors
- ❑ connectors
- ❑ CD-ROM Sensors

Process automation
- ❑ devices in modular housings for top-hat rail (DIN 50022) or panel mounting
- ❑ devices on 19" card for rack mounting (DIN 41494)
- ❑ CD-ROM Interface technology
- ❑ Remote I/O system *excom®*
- ❑ Segment coupler
- ❑ FOUNDATION™ fieldbus fieldbus components
- ❑ PROFIBUS-PA fieldbus components
- ❑ Multibarrier
- ❑ fieldbus system *sensoplex®2/2 Ex*
- ❑ miniature relays, industrial relays, time cubes, sockets
- ❑ programmable relays and timers
- ❑ explosion protection – basics for practical application (overview poster)

Fieldbus technology for factory automation
- ❑ Compact fieldbus components PROFIBUS-DP/DeviceNet™/ Ethernet
- ❑ *piconet®* – modular fieldbus I/O-system in IP67
- ❑ BL67 – modular fieldbus I/O-system in IP67
- ❑ BL20 – modular fieldbus I/O-system in IP20

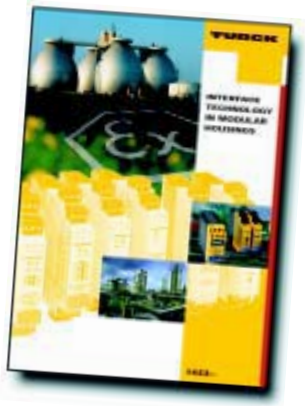

FAX-ANTWORT/FAX REPLY

Absender/Sender:

Name:

Firma/Company:

Abt./Position:

Adresse/Address:

Tel./Phone: Fax:

E-Mail:

D200423 0304

Hans Turck GmbH & Co.KG • D–45466 Mülheim/Ruhr • Tel. 0208/4952-0 • Fax 0208/4952-264 • E-Mail: turckmh@mail.turck-globe.de • www.turck.com

Interface Technology in Modular Housings

Functions – Selection Guide Explosion Protection Fundamentals General Technical Data and Guidelines	A
Isolating Switching Amplifiers	1
Rotational Speed Monitors/Motion Controls	2
Analogue Data Transmitters/Isolating Transducers	3
Logic Controllers	4
Valve Control Modules/Intrinsic Safe Power Supply	5
Coupler and Interface Devices	6
Power Supplies	7
Level Controls	8
Accessories	9
Index of Types – Interface Technology in Modular Housings TURCK Housings: *interfacemodul*, *multimodul*, *multisafe*® – Interface Technology on 19“ Card TURCK Housing Style: *multicart*®	10

The data sheets for the *multicart*® series can be found in the “Interface Technology on 19“ Card” catalogue

Functions – Selection Guide

interfacemodul:
Polycarbonate/ABS, snap-fit to hat rail (DIN 50022) or screw onto mounting panel, removable terminal blocks

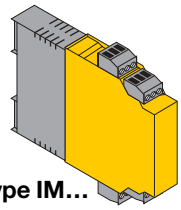

Type IM...

multimodul:
Polycarbonate/ABS, snap-fit to hat rail (DIN 50022) or screw onto mounting panel

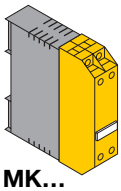

Type MK...

multisafe®:
Polycarbonate/ABS, base mounting or snap-fit to hat rail (DIN 50022), removable terminal blocks

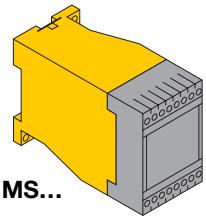

Type MS...

Circuit type	Function	interface modul	multi modul	multi safe®
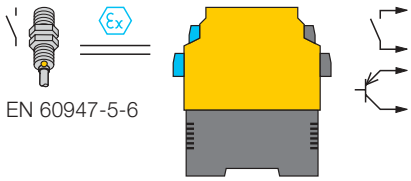 EN 60947-5-6		**Chapter 1**		
	Switching amplifiers	IM12...	MK1...	
	Isolating switching amplifiers	IM1...Ex IM12...Ex	MK1...Ex0 MK13...Ex0	MS1...Ex0 MS13...Ex0
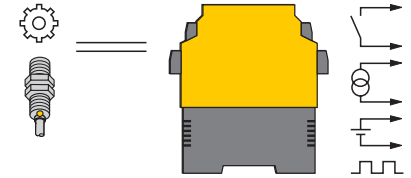		**Chapter 2**		
	Rotational speed monitoring **Frequency-to-current conversion**		MK21... MK21...Ex0 MK26...	MS21, MS22, MS23, MS24, MS25, MS27, MS28
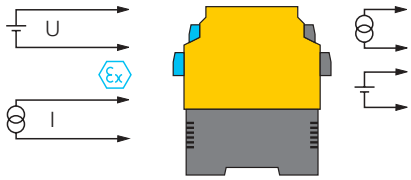		**Chapter 3**		
	Analogue data transmitters for standard signals		MK31.. MK31...Ex0	MS31...
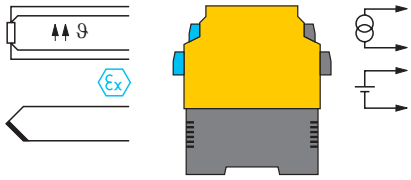		**Chapter 3**		
	Temperature transducers **Temperature measuring amplifier**	IM34...Ex	MK32...Ex0	
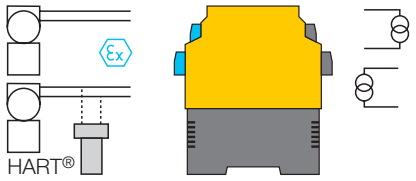 HART®		**Chapter 3**		
	Isolating transducers	IM33..Ex	MK33...Ex0	
	HART® isolating transducers	IM33..Ex-Hi		
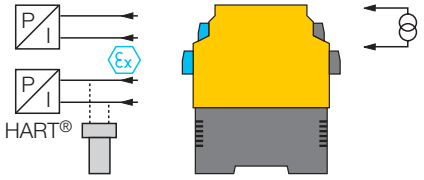 HART®		**Chapter 3**		
	Intrinsically safe output barrier **Intrinsically safe HART® output barrier**	IM35...Ex-Hi	MK35...Ex0	
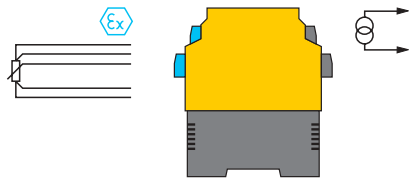		**Chapter 3**		
	Potentiometer amplifiers	IM36...Ex		

Hans Turck GmbH & Co.KG • D–45466 Mülheim/Ruhr • Tel. 0208/4952-0 • Fax 0208/4952-264 • E-Mail: turckmh@mail.turck-globe.de • www.turck.com

Circuit type	Function	interface modul	multi modul	multi safe
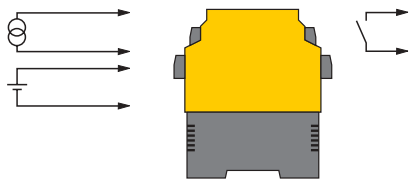	**Setpoint monitors**	**Chapter 4**		
		IM43...	MK43...	MS43...
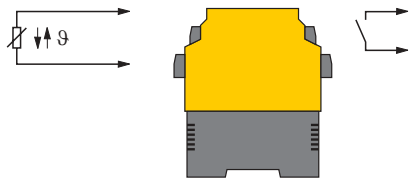	**Thermistor relays** **Pulse processing Amplifier relays**	**Chapter 4**		
			MK44...	MS41...
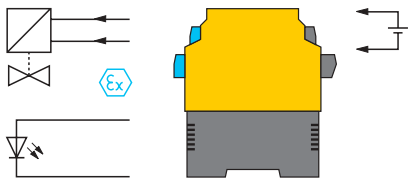	**Valve control modules**	**Chapter 5**		
			MK72...Ex MK72...Ex0	
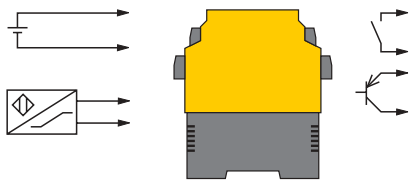	**Coupling and interface modules** **Relay couplers** **Electronic couplers**	**Chapter 6**		
		IM73...	MK71... MK73... MK73...S...	
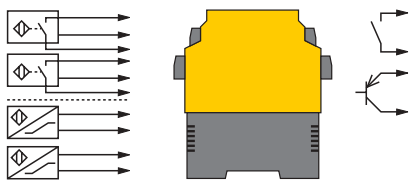	**Amplifier relays for sensors**	**Chapter 7**		
			MK81...	MS81...
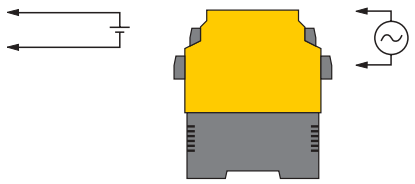	**Power supplies**	**Chapter 7**		
		IM82...	MK82...	
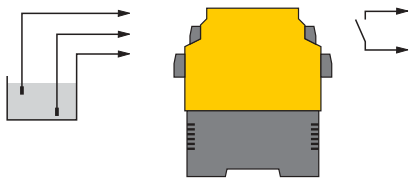	**Level controls**	**Chapter 8**		
			MK91...	MS91...

Explosion Protection

Summary of Topics

		Page
1	Directives and standards	8
2	Definitions of terms	9
3	Electrical equipment featuring protection type “Intrinsic Safety“	10
4	Zone Classification	12
5	Marking of devices	15
6	Manufacturer obligations	15
7	Guidelines for use of devices with intrinsically safe circuits	16
8	Proof of intrinsic safety	19
9	Approvals outside the EU	20
10	Approvals and certificates of conformity via Internet	20

The process of harmonisation of regulations in the field of explosion protection within the member states of the European Union was initiated in 1996. One of the main reasons for harmonisation is that the different regulations existing in the individual member states present a trade barrier. A transitionary period applied until the 30.06.2003 in which both the old and new regulations could be applied.
Since the 01.07.2003, the same common regulations apply for explosion protection in all EU states.

In the following please find a brief comparison between the new and the ”old” regulations. Our more detailed brochure **”Explosion Protection - A Practical Guide”** can be provided on request. Nevertheless, the user is obliged to know the presently applicable regulations and directives.

1 Directives and standards

History
Until the end of 1975, numerous national directives covering the field of explosion protection existed in the individual European states. On 18 December 1975, the first framework directive on explosion protection (mining excluded) came into effect, applying in the member states of the European Union: 76/117/EWG.

Until 1990 there were frequent amendments of this directive. This directive referred to the characteristics and structure of the equipment at issue and was directly related to standards. It applied exclusively to electrical equipment and explosion protection (except mining).

The fact that national directives were still in effect restricted free trade in this area.
In the beginning of 1994, the ”Framework Directive 94/9/EC of the European Parliament and Council of 23 March 1994 on the approximation of the laws of the Member States concerning equipment and protective systems intended for use in potentially explosive atmospheres” was passed. This directive has regard to the ”European Treaty” of 1985, in particular article 100a (amendment of 2 February 1992), establishing the European Community.

To find a general abbreviation for this new directive it was agreed to use the name **ATEX 100a**. ATEX is an abbreviation of the French translation of ”explosive atmosphere” (**at**mosphère **ex**plosible) and 100a refers to the article 100a. Apart from the article 100a, there are further articles which have not yet been fully transposed into according directives. TURCK catalogues always use the term **ATEX** to relate to the new directives on explosion protection conforming to ATEX 100a.

Within the member states of the European Union the ATEX 100a was translated into national legislation, e.g. in the Federal Republic of Germany by the ”Gerätesicherheitsgesetz (§11 GSGV)” and the ”Explosionsschutzverordnung (EXVO)”.

The directives applying for explosion protection were valid until 30.06.2003. The ATEX 100a came into force on the 01.07.2003.

Installation and operation of electrical equipment in hazardous areas – standards and requirements

Involved with installation, acceptance and operation of electrical equipment are:

The Legislator having industrial supervision, trade organizations, TÜV and experts as supervisory authorities.

All **Plant Personnel** are required to observe strict guidelines such as health and safety and other work regulations that govern the maintenance and operation of electrical equipment located in the hazardous area.

The System Specifiers who must meet safety requirements according to IEC 31 (CO) 43, ATEX137, EN 60079-14.

The Manufacturers of Components bound by constructional requirements set forth by EN 50014...20, 28 and 39 and ATEX 100a.

EN 60079-14
Installation of intrinsically safe systems in explosion hazardous areas

This standard includes the safety requirements that must be observed (e. g. identification and classification of explosion hazardous locations, temperature classes, cabling and wiring, requirements for the installation of electrical devices in zones 0 and 1).
Contrary to the standards described, which are primarily for manufacturers, this standard applies to maintenance, operators and test personnel.

As EN 60079-14 this standard also complies with the requirements of ATEX. Please note that the former exemption clause for components is no longer included. Partly an approval for individual components is now required.

ElexV – Regulations on electrical equipment in explosion hazardous locations (old) /areas (new)

As a national directive, the ElexV is addressed to those responsible in Germany for the technological causes of the formation of explosive mixtures.

The former ElexV of 1980 related to European regulations on explosion protection of industrial electrical equipment. This ”old” version constituted the legal basis for almost the entire field of explosion protection of electrical equipment. By defining explosion hazardous areas and especially by dividing these into specific zones, ElexV gained major importance as a standard for explosion protection measures. Since the introduction of the ATEX directive in 1996 a lot has changed. Definitions relating to the non-electrical aspects of new electrical equipment are now covered by the new ”Explosion Protection Directive” (ExVO). The amended

version of ElexV of 1996 refers only to those parts which have not yet been translated into national regulations.

ATEX 137 - Directive for system operators
The directive 1999/92/EC of the European Parliament and Council of 16 December concerning the essential health and safety requirements is intended to guard workers against the potential hazards of an explosive atmosphere. It is addressed to system operators and employers and contains binding regulations. Among other things, it requires to assess the risks resulting from a potentially explosive atmosphere, to classify areas exposed to potentially explosive atmospheres and to keep an explosion protection document.

The explosion protection directive – (ExVO)

The ExVO determines the placing on the market of devices, protective systems and components intended for use in potentially explosive atmospheres and is the German transposition of the directive 94/9/EC.
It describes the essential health and safety requirements and mandatory conformity assessment procedures. The ExVO is mainly aimed at manufacturers of devices, maintenance and test personnel.

In compliance with the directive 94/9/EC, ExVO excludes the following equipment from its scope (summarised): medical devices, explosive substances, or unstable chemicals, personnel protection equipment, seagoing vessels, offshore systems and products for military purposes.

EN 50014 – Electrical apparatus for use in potentially explosive atmospheres – General requirements

EN 50014 contains general requirements for the construction and testing of any electrical apparatus to be used in hazardous areas.
EN 50015...20, 28 and 39 describe the technical requirements of different methods of protection:
- oil immersion (EN 50015)
- pressurised apparatus (EN 50016)
- powder filling (EN 50017)
- flameproof enclosure (EN 50018)
- increased safety (EN 50019)
- intrinsic safety (EN 50020)
- encapsulation (EN 50028)
- intrinsically safe electrical systems (EN 50039)

With this protection method, all or parts of the electrical apparatus are immersed in oil so that the explosive atmosphere above the oil level or outside the enclosure cannot be ignited.

EN 50020 – Protection type "Intrinsic Safety (i)"

All other methods of protection attempt to contain an explosion to the inside of the housing and to prevent penetration of an ignitable gaseous mixture.

The method of "intrinsic safety" is based on a different approach. It limits the electrical energy to such an extent, that elevated temperatures, sparcs or arcs are incapable of generating the energy needed to ignite an explosive atmosphere. Due to the limitation of electrical energy, these circuits are especially suited to application in the field of measuring, control and instrumentation. The method of "intrinsic safety" has some significant advantages over other protection methods, e.g. maintenance and wiring of live circuits. These systems are easy to handle and cost effective due to inexpensive intrinsically safe components.

2 Definitions of terms

Explosion

An explosion is an exothermic reaction of a material (such as gas, fumes, or dust) occurring at a high reaction speed.

The risk of an explosion exists wherever there is the probability of an explosive atmosphere containing flammable gases or vapours, flammable liquids, combustible dust, or ignitable flyings due to handling, processing, using and storing of these materials.

Such hazardous atmospheres can be present for instance in chemical industries, gas stations, refineries, power plants, paint shops, vehicles, sewage plants, grain mills, airports, grain silos and filling plants.

Explosion hazards

Explosion hazards exist in locations:

- in which ignitable concentrations of flammable gases or vapours can exist under normal operating conditions, or because of repair or of leakage, and when these conditions provide the probability that a dangerous fuel to air mixture will occur;
- where the explosive or ignitable mixtures can come in contact with a source of ignition and they continue to burn after ignition.

Explosive (flammable) mixtures (general term)

A combustible (flammable) mixture is an atmosphere containing substances that when mixed with air, gases or vapours, propel a reaction after ignition.

Explosive (flammable) atmospheres

An explosive atmosphere contains gases, vapours or dust mixed with air as well as the usual filler materials that can explode spontaneously under atmospheric conditions.

Dangerous explosive atmospheres

A dangerous explosive atmosphere is a mixture containing concentrations of flammable gases or vapours that, when ignited, can cause damage to persons directly or indirectly through an explosion.

Explosion hazardous location

An explosion hazardous area is a location where potentially explosive atmospheres may exist due to local operating conditions.

Explosion Protection

Ignition triangle

In order to have an explosion, the following three components must be present simultaneously:

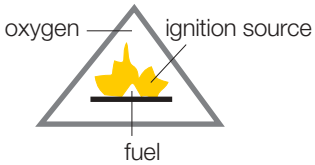

Possible sources of ignition:

- hot surfaces
- flammable or explosive gases
- mechanically generated sparks
- electrical installations
- transient currents
- static electricity
- lightning, ultrasonic energy...

Oxidizers:

- air (21 % Oxygen)
- pure Oxygen
- oxygen releasing compounds (i.e. potassium manganate)

Fuels (flammable substances):

Flammable concentrations of gases and powders from liquids or solids which have the potential for igniting an explosion.

Explosive limits

A mixture is only explosive when its concentration falls within certain material specific limits. These limits are called the upper and lower explosive limits and are listed in according tables.

Flash-point temperature

The flash-point is the lowest temperature at which a liquid releases sufficient vapours that are ignitable by an energy source and extinguish when the energy source is removed.

An explosive atmosphere cannot occur when the flash-point of a material is not exceeded during storage or handling. Flammable liquids, which do not dissolve in water, constitute a source of danger.

In Germany they are classified according to VbF (directive for the installation and operation of plants where flammable liquids are stored and handled). Further parameters to evaluate the danger are the glow temperature, the minimum ignition energy and the ignition temparature. These values are listed in according tables.

Primary and secondary methods of protection

Basically there are two methods used to prevent an explosion.

Primary method of protection

The primary method prevents formation of a dangerous atmosphere by one or more of the following measures:

- avoiding the use of flammable liquids
- increase of flash point
- limiting the concentration to safe levels
- through natural and technical ventilation
- monitoring the concentration

The primary method of protection is not described in this brochure. Please refer to the explosion protection regulations of the professional association of the chemical industry in Germany (Ex-RL) and EN 1127-1.

Secondary method of protection

The secondary method comprises measures to prevent ignition of an explosive mixture. Here, constructive or electrical techniques are used to

- segregate the electrical parts of the equipment, which could ignite a dangerous mixture, by keeping the explosive atmosphere away from the ignition source
- prevent an explosion by impeding the propagation to the surrounding explosive atmosphere.

The secondary protection method is frequently used, if primary protection does not provide adequate protection.

3 Electrical equipment featuring protection type "Intrinsic Safety"

The term "intrinsic safety" implies that the electrical energy of an intrinsically safe circuit is limited to such an extent that a thermal effect or spark is incapable of igniting an explosive atmosphere under specified conditions.

TURCK devices for use in explosion hazardous locations comply with protection type "intrinsic safety". The devices are divided into two different kinds of electrical equipment: intrinsically safe equipment and associated equipment. Marking of the devices enables clear distinction between the two types of apparatus (see point 5). Further there are devices defined as "simple equipment" which maintain an exceptional position within this field.

Intrinsically safe electrical apparatus
is any apparatus in which all circuits are intrinsically safe. Direct installation in hazardous locations is permitted, provided that all related requirements are met. An example is a NAMUR sensor approved according to EN 60947-5-6 or a transmitter.

Associated electrical apparatus
is any equipment which may incorporate both intrinsically safe and non-intrinsically safe circuits. Intrinsically safe devices may be connected to associated electrical equipment, provided that all essential conditions for this kind of interconnected assembly are fulfilled.

Associated electrical apparatus must generally be installed outside the hazardous areas. If installed within the hazardous location, additional types of protection must be provided.

All TURCK devices, type *multisafe*®, *multimodul*, *interfacemodul* and *multicart*® with intrinsically safe circuits, are classified as associated electrical apparatus.

Simple electrical equipment

Simple components and simple equipment not generating or storing more than 1.5 V, 0.1 A and 25 mW, do not require approval. This kind of equipment includes thermo-elements, photocells, switches, resistors and simple printed circuits, which feature defined and known parameters and do not affect the intrinsically safe circuit.
A definition of simple electrical apparatus is contained in EN 50020 and EN 60079-14.

Categories

The intrinsically safe electrical apparatus conforming to EN 50020 is divided into two categories. This classification is determined by the failure probability and the ignition capability of the intrinsically safe circuitry.

Category "ia"

Category "ia" indicates that the electrical apparatus should not be able to ignite a dangerous mixture during normal operation and in the event of a single fault, nor in the event of any combination of two faults. Intrinsic safety must be maintained even when two independent faults occur at the same time.

Therefore, components of any apparatus of category "ia" that are susceptible to faults must be present in triplicate.

Category "ib"

An electrical apparatus in category "ib" should not be capable of causing ignition during normal operation and in the event of a single fault. Intrinsic safety must be maintained in the event of a single fault.

A fault could be the failure of a component that is susceptible to disturbances. Any apparatus in category "ib" must have all components in duplicate.

Groups and temperature classes

Electrical apparatus for use in the hazardous area is classified into groups and classes based on the likelihood of an explosion danger. This is of great importance from a **safety aspect** as well as an **economical aspect** because it determines the requirements that must be met by the electrical apparatus.

Definition of **Groups** is based on the location in which the apparatus is going to be used.

- Group I classified apparatus may be used in mines susceptible to firedamp and must conform to European standards EN 50014...50020 and 28.

- Group II classified apparatus may be used in all other potentially explosive atmospheres.

Group II classified apparatus is used in all hazardous (classified) areas except mining applications where methane may be present. Depending on the application, different flammable materials with different ignition energy ratings are needed. From a practical point of view, subdividing Group II is therefore necessary and makes sense, not only for economical reasons.
Subdivision of Group II equipment is determined by the different ignition energy of the flammable materials. The different groups are classified by capital letters in ascending alphabetical order according to the hazard risk of the associated material. Materials belonging to group C require less ignition energy than Group A materials (see table 1).

	T1	T2	T3	T4	T5	T6
I	Methane					
II A	Acetone	Ethyl alcohol	Gasolines	Acetadehyde		
	Ethane	i-Amylacetate	Diesel fuel	Ethyl ether		
	Ethyl acetate	n-Butane				
	Ammonium	n-Butyl alcohol	Aircraft fuel			
	Benzol (pure)					
	Acetic acid		Fuel oils			
	Carbon monoxide		n-Hexane			
	Methanol					
	Propane					
	Toluene					
II B	City gas	Athylene*)				
	(carbonated hxdrogen)					
II C	Hydrogen	Acethylene*)			Carbon-dissulfide*)	Ethylnitride*)
	*) no authorised regulations					

Tab. 1 Flammable materials - temperature classes and groups

Temperature class IEC/EN NEC 505-10	Maximum surface temperature of apparatus (°C)	Ignition temperatures of flammable materials (°C)	Temperature class NEC 500-3
T1	450	> 450	T1
T2	300	> 300 ≤ 450	T2
	280	> 280 ≤ 300	T2A
	260	> 260 ≤ 280	T2B
	230	> 230 ≤ 260	T2C
	215	> 215 ≤ 230	T2D
T3	200	> 200 ≤ 300	T3
	180	> 180 ≤ 200	T3A
	165	> 165 ≤ 180	T3B
	160	> 160 ≤ 165	T3C
T4	135	> 135 ≤ 200	T4
	120	> 120 ≤ 135	T4A
T5	100	> 100 ≤ 135	T5
T6	85	> 85 ≤ 100	T6

Tab. 2 Surface and ignition temperatures

Explosion Protection

Temperature class

The temperature class specifies the maximum allowable surface temperature of an apparatus. In this category, the explosion protected apparatus can be approved for different temperature classes - a decision which depends on technical and economical considerations.

In the majority of cases, explosion proof equipment for the lowest temperature can be very expensive to buy and install. By comparison, using products featuring protection type „intrinsic safety“ is more efficient and cheaper. Intrinsically safe equipment for direct installation in hazardous areas requires temperature classification. For associated apparatus temperature classification is not needed.

Ignition temperature

The ignition temperature (defined as the temperature at which a mixture self-ignites during testing) directly relates to the temperature class. The temperature class indicates the maximum surface temperature of an apparatus and must be lower than the minimum ignition temperature of the flammable material (see table 2 - page A-11) to prevent an ignition.

Device Groups and Categories According to the ATEX Directive

The ATEX directive includes a new kind of device marking which describes the application and the constructional level of safety.

This new marking per ATEX does not replace standardised marking including temperature class, explosion group and protection type.

Marking according to ATEX contains information on the area of application and the safety level achieved by the device. Marking according to EN 50020 provides detailed information on how the protection measures were realised and which applications are permitted. EN 50020 and ATEX use similar terms but the information provided may be essentially different.

The first criterion is the **Equipment Group.** This classification accords to the groups described on page 11 and defines the location in which a device may be installed.

- Device Group I: for mining underground with a potential hazard due to firedamp and/or combustible dusts.
- Device Group II: for all other locations in which a potentially explosive atmosphere exisits

The second criterion is the **Equipment Category,** defining the level of safety:

1: very high level of safety: devices featuring two independent means of protection; even in the event of rare device disturbances, the device remains functional and maintains the requisite level of protection

2: high level of safety: devices featuring one means of protection. Even in the event of frequently occurring device disturbances or equipment faults which normally have to be taken into account the device provides the requisite level of safety

3: normal safety; the device ensures the requisite level of protection during normal operation.

Equipment classified as Group I (underground mining susceptible to firedamp) uses the prefix M, e. g. M1, in addition to the category classification.

The third and last criterion is the **Substance Group** which characterises the application of devices in particular atmospheres:

G: explosion protection in explosive atmospheres due to gases, vapours or mists (G: gas)

D: explosion protection in explosive atmospheres due to dusts (D: dust)

The equipment category also determines whether the device is an associated apparatus or an intrinsically safe apparatus. If it is an associated apparatus the equipment category is put into round brackets, e.g. II (1) G.

4 Zone classification

According to EN 60079-10 and EN 1127-1 explosion hazardous areas are divided into zones such as flammables gases, vapours, mists and combustible dust. The classification is based on the likelihood that a dangerous explosive atmosphere occurs. The ATEX directive has re-defined the zone division as follows:

- zone 0, 1 and 2 for gases and vapours
- former zones 10 and 11, now zones 20, 21 and 22 for dusts
- zones G and M for locations used for medical purposes

Zone classification	Likelihood of an explosive atmosphere	Compliance with safety requirements by	Requirements fulfilled by		
			equipment group	related equipment category	additional equipment category
Zone 0 (gas, ...) Zone 20 (dust)	continuously, for long periods or frequently	2 independent means of protection	II	1 G (for gas, ...) 1 D (for dust)	–
Zone 1 Zone 21	occasionally	1 independent means of protection	II	2 G 2 D	1
Zone 2 Zone 22	unlikely or infrequently - for a short period only	normal operation	II	3 G 3 D	1 or 2

Tab. 3 Zone classification – equipment category

Gases and vapours

Zone 0

Zone 0 is a location in which ignitable concentrations of flammable gases or vapours are continuously present, or present for long periods. The example shows a gas station with zone 0 locations.

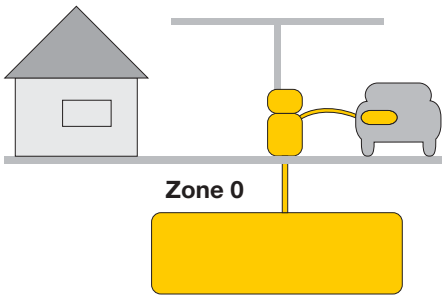

According to the previous national regulations any apparatus or parts thereof used in a zone 0 location had to be specially certified and approved for use in zone 0 locations. Further, the certificate of conformity had to mention explicitly that the equipment and parts thereof were permitted for use in zone 0. When using intrinsically safe and associated equipment as an interconnected assembly, both parts used to require a system approval.

This restriction is not included to the ATEX directive. If both parts of equipment meet the regulations for installation in zone 0, it is permitted to use the equipment accordingly without an extra approval. When electrical equipment approved by both previous and new regulations is used as an interconnected assembly, it is required to meet all requirements set forth by both directives. Additionally a system approval is needed.

Intrinsically safe apparatus designed for use in zone 0 must meet category "ia" safety standards and must have no live contacts. Galvanic isolation between intrinsically safe and non-safe equipment is the method of choice. If earthing of the intrinsically safe circuit is required for functionality, this must be done outside zone 0, but as close as possible to zone 0.

Zone 1

Zone 1 are locations in which an explosive air/gas mixture is likely to occur under normal operation. Here ATEX does not incorporate any changes.The example identifies the area near the gas pump during refuelling as a zone 1 location.

Generally the following areas in industrial plants are considered to be zone 1 locations:

- in the vicinity of zone 0
- close to inspection openings
- near filling and draining devices
- inside of machinery

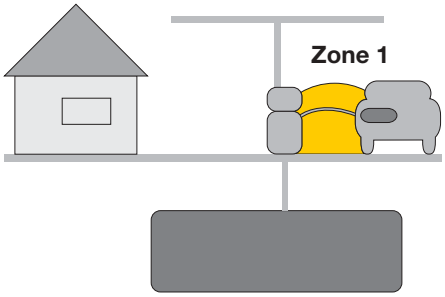

Any equipment certified for zone 1 must be Group IIA, IIB or IIC and at least category "ib".

Zone 2

Zone 2 comprises areas in which an explosive and dangerous atmosphere is unlikely to occur, but, if it does, only for a short period. The ATEX definition of zone 2 differs slightly: An explosive atmosphere should not occur, but, if it does, only infrequently and for a short period.

- any areas near zone 0 and 1
- areas near flange seals whenever standard flange joints are used
- areas near pipe lines in closed rooms

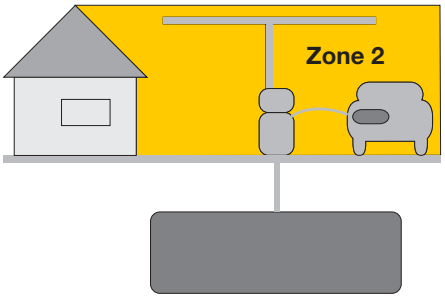

Unlike apparatus for zones 0 and 1, equipment for use in zone 2 does not require a test certificate by an authorised body. Devices for zone 2 must conform to category 3 and must meet the following criteria (EN 50021):

- **restricted breathing enclosures**
  (10 K overtemperature only)
- **sealed enclosures**
  (various test methods/requirements)
- **simple pressurized enclosure**
  (like „p" without purging)
- **limited energy**
  (intrinsic safety without safety factor)
- **encapsulated switching devices**
  (simple „pressurized enclosure")
- **lower requirements for equipment in zone 1, e.g.**
  - clearances and creepages
  - housing impact test
  - plastic materials
  - construction of lampholders and starters

Installation of devices in Zone 0 to 2

For installation in zones 0 to 2 (gas, vapour) it is required that intrinsically safe and associated equipment must meet at least those requirements applying to the zone in which the intrinsically safe apparatus is to be installed. If the equipment meets higher requirements, operation is obviously permitted. The national regulations apply to interconnected assembly and installation of devices. Please refer to point 7 for further information.

Explosion Protection

Combustible dusts

Explosion protection regulations applying to combustible dusts differ from those relating to gases and vapours due to the different hazard points. Here, ATEX also determines new regulations. Transposition into new directives and standards has not yet been completed, so that it is likely that there will be various amendments and complications.

The previous zone classification and the new division into zones according to ATEX differ in many respects. Following please find a comparison.

Previous zones 10 and 11 will be replaced by the zones 20, 21 and 22. Here the zone classification is similar to that of gases and vapours.

Previous Zone 10 - new Zone 20

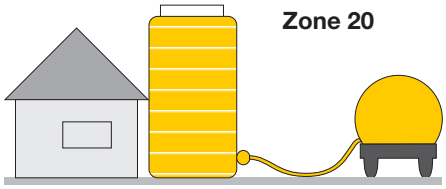

According to the previous regulations, zone 10 comprises areas in which a dangerous explosive atmosphere is constantly present or prevails for a long period.

According to ATEX, zone 20 is classified as an area in which a dangerous explosive atmosphere in form of a dust cloud is continuously present, or occurs frequently, or for a long period. The possibility of a dust deposit with a known or excessive thickness is given. The presence of dust deposits as a single event does not constitute a zone 0 classification.

As a rule, these conditions can only prevail inside an enclosure, pipes and instruments.

Areas, in which dust deposits occur, but where clouds of dust are not present constantly, frequently, or for a long term, do not belong to this zone.

Previous Zone 11, new Zone 21 and Zone 22

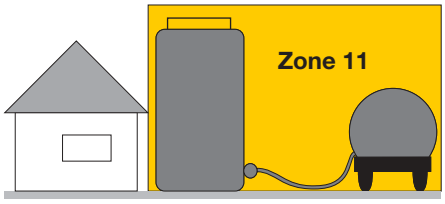

Zone 11 comprises areas in which it is likely that a dangerous explosive atmosphere occurs occasionally due to whirling up of dust. According to ATEX, zone 11 is subdivided into two zones, i.e. zones 21 and 22.

Zone 21:

Areas in which, during normal operation, a potentially explosive atmosphere in form of a dust cloud can occur occasionally. Dust deposits or layers of combustible dust will usually be present.

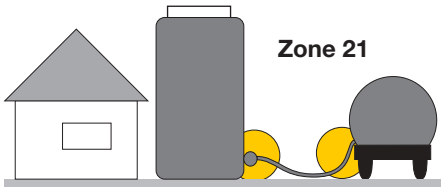

These can be areas in the close vicinity of filling or dust extraction stations, where dust deposits are present and explosive concentrations of flammable dust mixed with air may occur during normal operation.

Zone 22:

An area in which it is unlikely that a potentially explosive atmosphere in form of a dust cloud occurs during normal operation. If such an atmosphere occurs, then only for a short period, or in the event of dust accumulation, or in layers of combustible dust.

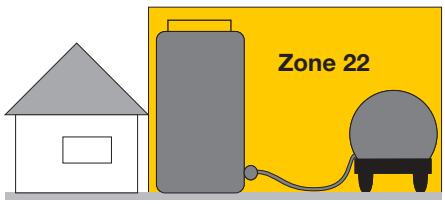

An example: areas in the vicinity of equipment containing dust which can escape due to leakages und where dust deposits can build up (e.g. mills from which dust is released and accumulates) could be classified as zone 22 environments.

Devices for use in Zone 20 to 22

The ATEX regulations covering combustible dusts are still in preparation. Installation and operation of devices in zone 20 to 22 are subject to the national regulations (pr EN50281-1-2). Associated equipment does not require an approval for flammable dusts, an approval for gases and vapour is sufficient. It must be ensured that the limit values of intrinsic safety of the EC type examination certificate are met in case of an interconnected assembly. Then it is permitted to mark the intrinsically safe equipment, for instance as II 1 D and the associated apparatus as II (1) G.

During installation it is required to observe the special conditions of dust protection. E.g. simple apparatus for use in zone 20 to 22 must have an approval, whereas this is not necessary for simple equipment in zones 0 to 2.

Medical environments

According to the previous regulations, medical environments, e.g. all equipment used for anesthesia or for articificial respiration, were subdivided into zones M and G. ATEX no longer includes medical equipment in the scope of its explosion protection regulations. The applicable legislation covering the protective aspects associated with medical products do not relate to explosion protection so that there is a juridical insecurity in this field.

5 Marking of devices

Equipment for explosion protected areas must be clearly marked. There are two different types of marking. According to CENELEC marking of an apparatus conforming to EN 50014/20 must provide the following information:

- manufacturer's name or trademark
- part number
- EEx-symbol
- ignition category (e. g. „ia")
- designated group together with the respective subdivision (e. g. IIC)
- temperature class or maximum surface temperature (for group II devices only)
- serial number (may be omitted if space is restricted)
- test authority, date and file number
- "x" after the test certificate number indicates that special conditions must be met (see certificate for special conditions)

An intrinsically safe apparatus could have the following marking:

EEx ia IIC T6

- T6 — temperature class
- IIC — explosion group
- ia — type of protection
- EEx — conform to European standard

An associated apparatus could have the following marking:

[EEx ia] IIC

- IIC — explosion group
- ia — type of protection
- EEx — acc. to European standard
- [ ] — associated apparatus

To date, the test certificate number of the test authority used to contain the generation number of the applicable standard to indicate the amendment status, e.g.:

PTB Nr. Ex-85.B.2128X

PTB Nr.	authorised body
Ex-	explosion protected apparatus
85.	year of issue
B.	generation indicator
2128	serial certificate number
X	special conditions

According to ATEX marking must be as follows:

PTB 97 ATEX 2128X

PTB	authorised body
97	year of issue
ATEX	accord. to 94/9/EC
2128	serial certificate number
X	special conditions

Within the European Union the devices must meet the respective requirements. If the manufacturer fulfills these, he is permitted to affix the CE sign.
The ATEX directive extends marking. The identification number of the notified body, which carried out the quality assurance system approval, is added to the CE sign (see point 6).

CE 0102

For example, the test body of the TÜV Hannover uses the identification code 0032 and the PTB in Braunschweig has the code number 0102. Additionally the year of production and the constructional level of safety must be contained in the device's marking. In case of intrinsically safe apparatus marking according to ATEX would be:

II 1 G

- G — explosion protected against gas, vapour and mist
- 1 — very high safety level suited for zone 0
- II — all areas except mining

Associated equipment is identifiable by round brackets enclosing the device category:

II (1) G

- (1) — may not be installed in hazardous areas

6 Manufacturer obligations

Certificates of conformity and EC type test certficates

An authorised body is entitled to test and certify that devices are suited for use in explosion hazardous areas and comply with the relevant regulations and standards.

Previous regulations required the manufacturer to submit a test sample to the test body and to ensure compliance with existing regulations. The authorised test body then issued the certificate of conformity and passed it on to the manufacturer. The certificate of conformity contains all relevant data associated with explosion protection.

Here, the ATEX directive also implements a change. The manufacturer is requested to supply a type test sample to an authorised inspection body, which draws up a test report to be submitted to the notified body entitled to issue the EC type examination certificate after verifying conformity. Notified bodies and external inspection bodies are registered centrally. The EC type examination certificate contains all data relevant for explosion protection.

The obligation to keep a copy of this certificate is the responsibility of the manufacturer of the device. Along with the certificate, the manufacturer provides an instruction manual with all relevant Ex data. In addition, the manufacturer issues a declaration of conformity, stating that all applicable standards and directives are met. The user needs these documents to document compliance of the system installation correctly.

Explosion Protection

CE marking of equipment

Devices for use in explosion hazardous area are equipped with the CE marking and the identification code of the testing authority. The assessment procedure for CE marking is clearly defined and depends on the device category. The example shown relates to device category 1, featuring the highest safety level. The applicable annexes of the directive 94/9/EC are also shown.

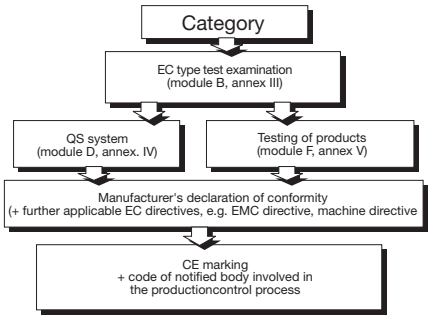

Different annexes apply to the various device categories.

Assessment of the quality assurance system

The manufacturer of intrinsically safe devices, categories 1 and 2, must have an approved quality management system. This approval is needed to ensure that the manufacturer produces the devices according to the test type sample and that conformity to relevant protection regulations is given. Assessment of the quality assurance system is carried out by a notified body. Assessment can be achieved in two different ways:

Assessment and certification can be done directly within the frame of certification according to ISO 9000ff. Approval of those fields associated with explosion protection is accomplished in cooperation with an expert of the notified body. If the ISO certificate has already been granted, it is possible to certify those parts relating to explosion protection subsequently within the frame of an additional audit.

The following illustration shows both possibilities:

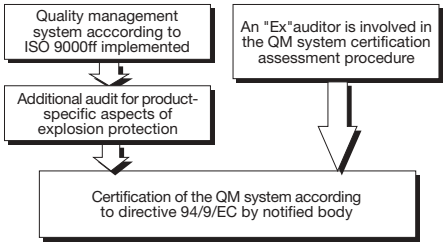

TURCK's manufacturing sites for explosion protected devices are certifed according to ISO 9001 and have a quality system approval.

7 Guidelines for use of devices with intrinsically safe circuits

The national regulations and standards are the basis for use of devices with intrinsically safe circuits. These must be strictly observed and followed. The user is obliged to inform himself on all revisions.
The following guidelines relate to the ATEX (94/9/EG) directive of the member states of the European Union, especially to the field of explosion protection in areas exposed to hazards by gas.

If the device is classified as an associated apparatus equipped with intrinsically safe and non-intrinsically safe circuits it may not be installed in explosion hazardous areas. It is permitted to connect intrinsically safe devices located in the hazardous area to the intrinsically safe connections of this device. With the Turck devices, series *multisafe*®, *multimodul* and *multicart*®, these connections are marked in blue. When interconnecting devices within such an assembly it is mandatory to provide a proof of intrinsic safety (EN 60079-14). It is required to verify that all data related associated to explosion protection of the devices allow mutual operation. Verification must include the internal capacitances and inductances of the cables used. Please refer to section 8.1 on page A-19 for further information.

Intrinsically safe circuits should never be interconnected with non-safe circuits. Even if only interconnected once, it is possible that essential protective elements are damaged without the user being aware of this fact. A simple function test is not suited to verify a damage of this kind. Once intrinsically safe circuits have been connected to the non-intrinsically safe circuit, it is not permitted to use the device subsequently as intrinsically safe equipment.

The governing regulations cover installation of intrinsically safe circuits, mounting to external connections, cable characteristics and cable installation. Cables and terminals with intrinsically safe circuits must be marked and separated from non-intrinsically safe circuits or feature appropriate isolation (> 1.500 VAC) Following an excerpt from the requirements according to EN 60079-14:

- protection against external electrical or magnetic fields (e.g. power current cables)
- prevent conductor splicing of fine wires through wire sleeves
- min. cross section of 0.1 mm (also single wires of a conductor)
- protection against damaging (mechanical, chemical, thermic...)
- armouring, metal cladding, shielding of cables and lines
- common use of single-core non-sheathed cables of intrinsically and non-safe circuits in one line is not permitted
- separate error assessment when using multi-conductor cables and lines
- when marking cables by colour, light-blue must be used.

It is required to observe the specified clearances between the intrinsically safe connections of this device and the earthed components and connections of other devices. If intrinsically safe TURCK devices, style *multimodul* or *multisafe*® are used, these may be mounted directly next to each other. The required safety distance of 6 mm between intrinsically safe connections is ensured by the terminal design. It is further required to observe a safety distance of 3 mm (EN 50020, chapter 6.3, table 4) to earthed components, such as covers or side panels of mounting cabinets. A thread measure of 50 mm must be observed between intrinsically safe connections and non-safe connections.

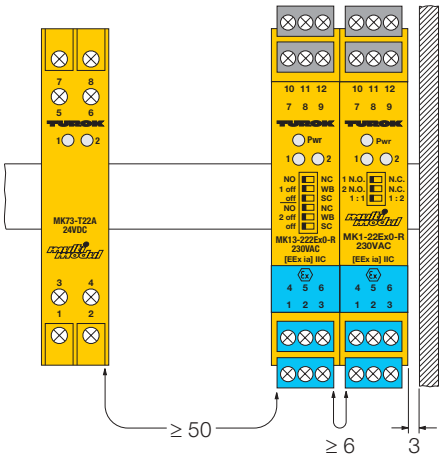

Due to the open construction and the special wiring of *Eurocard* style devices, the following regulations must be followed when installing *multicart*® switching amplifiers:

- According to IEC publication 60529, *multicart*® style devices require a protection of at least IP20. Generally, this is achieved by installing special partiton barriers or special enclosures in the mounting rack.
- connections for intrinsically safe and non-intrinsically safe circuits must either be separated by a physical barrier so that they are at least 50 mm (thread measure) apart from each other, or each connection must be provided with cable sleeves which cannot slip off and ensure covering of all bare parts. These safety measures are not necessary if crimp snap-in type edge connectors are used.
- all edge connectors on the *multicart*® devices must be coded by a pin/plug coding to avoid insertion of the wrong module. The coding is prepared by the manufacturer by means of coding pins and holes on the contact strips according to a coding plan.
- within the mounting rack, the safety distances must also be observed.

A thread measure is defined as the distance between circuits separated by an partition barrier. The reason for this regulation is that it possible to work with live intrinsically safe circuits; thus it must avoided that these come into contact incidentally with any non-safe connection components.

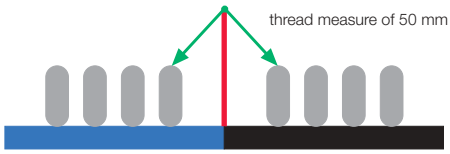

This distance is only required for external connections which can be accessed by the user. The minimum distance between two intrinsically safe circuits must be 6 mm and separation from other (earthed) metal parts must be 3 mm.

The approval expires, if the device is repaired, altered or opened by a person other than the manufacturer or an expert unless the device-specific instruction manual explicitly permits such interventions. Only an expert disposes of the information on protection measures needed to assure that the device is still in accordance with the applicable regulations after such an intervention. Visible damages of the device's housing (e. g. black or brown discolouration due to heat accumulation, perforation or deformation) indicate a serious error and the device must be turned off immediately. It is required to check the connected equipment too.

Inspection of a device with regard to all relevant aspects of explosion protection may only be carried out by an expert or the manufacturer. Operation of the device is only permitted within the specified limits, e.g. the supply voltage may never exceed the maximum rating and the temperature range during operation must be strictly observed.

Intrinsically safe circuits with galvanic isolation - as is the case with TURCK devices - should not be earthed, unless not absolutely necessary from a functional point of view.

Circuits without galvanic isolation, e.g. Zener barriers, always require earthing. EN 60079-14 includes the relevant earthing regulations. Within zone 0 earthing of a circuit is not necessary. If earthing is necessary for functional reasons, then it must be carried out in close vicinity of zone 0.

Prior to every initial set-up or after any change of the device interconnection within the assembly, it must be ensured that all applicable regulations, directives and framework directives are met, that all safety regulations are fulfilled and that the device is functioning properly. Only then operation is permitted.

Mounting and connection of the device should only be carried out by qualified and trained staff familiar with the relevant national and international regulations of explosion protection to ensure correct operation.

The system operator must ensure that the system is always in the required safe condition. The system must be inspected continuously and necessary maintenance work must be carried out immediately while observing the safety regulations. The system must be tested in case of need, latest every three years.

Accidents

The operator must report any explosion which could have been caused by the electrical equipment to the supervisory body. The supervisory body is entitled to order an investigation by an expert.

Explosion Protection

Safety barriers

Safety barriers are considered protection devices and their function is to avoid possible errors and faults by preventing the transfer of unsafe levels of energy to the hazardous area. Possible faults are:

- excessive voltage in the hazardous area
- high current levels in the hazardous area (short-circuit)

Because barriers have no galvanic isolation, they require connection to the equipotential connection (PA) leading into the hazardous area to prevent potential variances between conducting constructional parts and the intrinsically safe circuit.

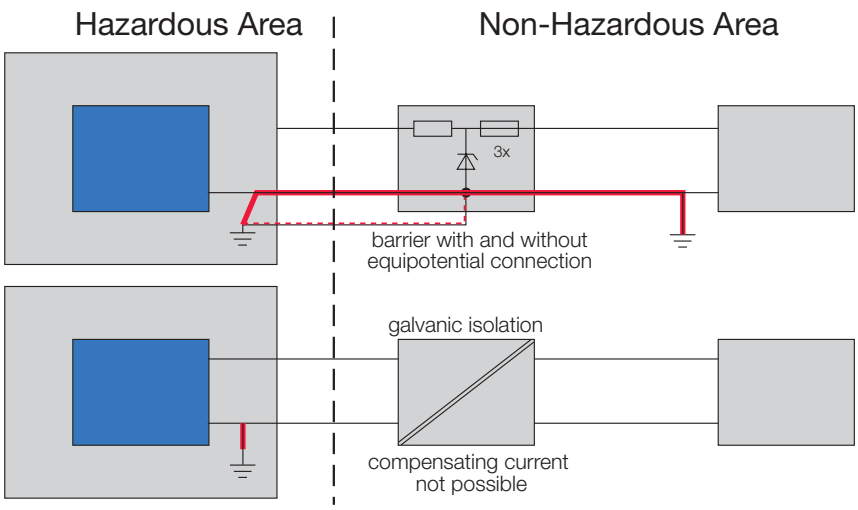

The following parameters must be observed when using safety barriers:

- Zener voltage U_Z
- short-circuit current I_k
- maximum current I_m

In cause of fault, these maximum energy values could reach the hazardous area.

The safety parameters of the barrier are:

- the supply voltage of the barrier should always be lower than the maximum input voltage indicated on the barrier, otherwise any leakage currents occurring during normal operation could flow through the Zener diodes
- total series resistance R of the barrier
- maximum voltage U_M on the hazardous side
- maximum allowable external inductances L_a and capacitances C_a.

Section 12, 2.4 of EN 60079-14 generally requires intrinsically safe circuits to be earth-free, but for safety and functional reasons earthing is permitted.
Due to an earth fault between two different potentials of remote system components, compensation currents may flow in the intrinsically safe circuit. These currents can counteract intrinsic safety, e.g. by causing excessive heat within a cable which originally was rated correctly for the intrinsically safe circuit.

The safest method is an isolated (earth-free) design of intrinsically safe circuits. As a rule, earthing is usually not necessary for functional reasons. Earthing of an intrinsically safe apparatus at one point is permitted and in many cases needed to prevent disturbances. Metal housings of intrinsically safe equipement do not require earthing. Further details on Zener barriers are included in the data sheets available from the respective manufacturers.

8 Proof of intrinsic safety

According to EN 60079-14 a proof of intrinsic safety must be provided to confirm that equipment interconnected within an assembly accords to the requirement of intrinsic safety. In this context there is a clear distinction between two basically different circuits:

1. simple intrinsically safe circuit with a single associated apparatus and at least one intrinsically safe apparatus without additional supply
2. more than one associated apparatus which is capable of supplying electrical energy to the intrinsically safe circuit not only during normal operation but also in a fault condition.

8.1 Simple circuits

The first definition of a simple intrinsically safe circuit requires to observe all electrical limit values stated in the EC type examination certificate and the power characteristics. If these conditions are met, the user is entitled to keep a proof of intrinsic safety. Inductances and capacitances of the installed cables must be taken into account.
Intrinsic safety of a simple circuit is given, if the limit values are maintained according to the following conditions:

associated equipment	condition	intrinsically safe apparatus + cable
U_0	≤	U_I
I_0	≤	I_I
P_0	≤	P_I
L_0	≥	$L_I + L_C$
C_0	≥	$C_I + C_C$

The cable characteristics provided by the manufacturer should be used. Should these not be available, it is recommended to use the following typical values (BASEEFA newsletter no. 3, October 1980):
L_C = 1 mH/km / C_C = 110 nF/km

The connection of proximity switches to isolating switching amplifiers, or 2-wire transmitters to isolating transducers, or solenoid valves to a valve control module can be considered as simple circuits.

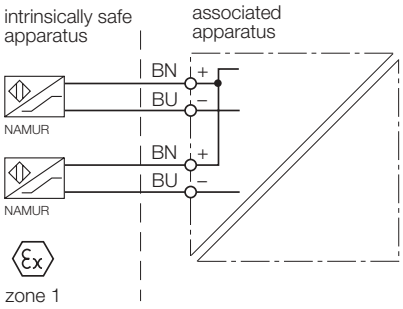

The limit value indexes of the old certificate of conformity and the new EC type examination certificate differ.
In this overview the indexes according to EN 60079-14 are used. Index „o“ stands for maximum output values and „i“ for maximum input values.

The proof of intrinsic safety should be laid down in a standardised document to facilitate clear documentation.

The document should contain the date, the name of the manufacturer, the circuit type and the type code. A possible form of documentation is shown below.

Associated equipment

Type	Type name	Manufacturer	Approval Number	Expl. Group	Device Category	U_0 [V]	I_0 [mA]	P_0 [mW]	L_0 [mH]	C_0 [nF]
Isolat. switching amplifier	MS13-11Ex0-T	TURCK	DMT 01 ATEX E119	[EEx ia] IIC		11.0	55.0	150.0	1.0	500.0

Intrinsically safe electrical equipment

No.	Type	Type name	Manufacturer	Approval Number	Expl. Group	Device Category	U_I [V]	I_I [mA]	P_I [mW]	L_I [mH]	C_I [nF]
1	Proximity switch	BIM-INT-Y1X	TURCK	KEMA 01 ATEX 1264 X	EEx ib IIC T6		15.0	60.0	100.0	50.0	30.0
2	Proximity switch	SI2-K08-Y1X	TURCK	KEMA 01 ATEX 1264 X	EEx ib IIC T6		15.0	60.0	100.0	266	41.0
3											
	Cable inductances and capacitances: (Manufacturer data or L_C = 1 mH/km, C_C = 110 nF/km)	Total cable length: 130 m								0.13	14.3
	Total inductances and capacitances: (ΣL_I and ΣC_I)									0.69	454.3

Intrinsic safety is given if the following conditions are fulfilled: $U_0 \leq U_I$ $I_0 \leq I_I$ $P_0 \leq P_I$ $L_0 \geq \Sigma L_I$ $C_0 \geq \Sigma C_I$

Example of a "Proof of intrinsic safety"

Explosion Protection

8.2 Interconnection/Assembly of several devices

The second case considers interconnection of several active associated devices. It differs essentially from the first case. Here it is not permitted to apply the electric limit values of the EC type examination certificate for the proof of intrinsic safety.

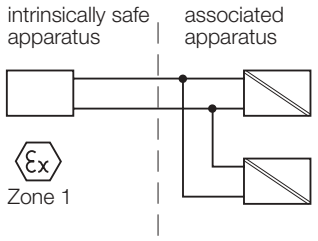

Different limit values apply to an assembly of the individual associated apparatus. Such an assembly will always be classified as equipment according to category „ib“, even if the single apparatus accords to category „ia“. An assembly may therefore not be installed in zone 0. A detailed description of interconnection and assembly is beyond the scope of this catalogue. The related calculation methods and an example are contained in annexes A and B of EN 60079-14. Additionally, the ignition curves of IEC 60079-11 are needed. EN 50020 also contains the ignition curves.

8.3 Non-linear characteristics

When interconnecting associated apparatus whose typical curves are not entirely linear, a special procedure must be applied. This procedure is explained precisely in report number PTB-THEx-10 of the German PTB in Braunschweig (ISBN 3-89701-440-8).

9 Approvals outside the EU

Equipment certified according to the ATEX directive may be placed on the market, installed and put into service within the member states of the European Union. Even though Switzerland does not belong to the EU, approvals according to ATEX are accepted. An approval by SEV is not required, if the customer provides the mandatory documentation, i.e. the instruction manual, the EC type examination certificate, the CE declaration and the certificate of the quality management audit relating to explosion protection.

Many states outside the European Union explicitly request an own national approval. Therefore TURCK devices feature approvals for many different countries. Own approvals are required e.g. in the USA, Canada, China, Japan, Australia, CIS states, Hungary or in the Czech Republic, whereas other states accept approvals issued by other states. For this reason it is indispensable to be familiar with the national requirements.

In many states approvals are granted for a certain period only. Therefore it is recommended to check if the approval has expired or has been prolonged accordingly. If an approval expires after installation, many countries accept further operation.

Approvals according to ATEX and approvals in the USA and Canada are not subject to a time limit.

Apart from the national approvals there are also specific installation and operation requlations. These are supplied together with devices featuring approvals for the USA and Canada. The TURCK brochure „**Understanding Hazardous Area Sensing**“ (in English) gives insight into explosion protection in the United States and can be provided on request.

10 Approvals and certififcates of conformity via Internet

TURCK offers their customers to view all valid approvals and to download these as PDF files (Acrobat Reader, version 3.0):
www.turck.com
⇒ Worldwide Headquarters Germany
⇒ Download
⇒ Approvals

General Technical Data and Guidelines

A

Mounting of devices

multimodul and *multisafe*® devices are suited for hat-rail mounting (EN 50022) or screw panel mounting.

Accordance with safety regulations must be verified during installation. Devices must be protected against dust, dirt, moisture and other environmental influences.They should also be protectd against the risks of mechanical damaging, unauthorised access and incidental contact. When mounting devices in cabinets, it must be ensured that dissipating heat is conducted away. If natural ventilation is insufficient for this purpose, it is required to integrate ventilation slots, ventilators or cooling means. The manufacturers of mounting cabinets provide according calculations. The admissible temperature range is indicated in the technical data of the devices.

The most favourable installation mode is mounting on a horizontal hat-rail on which most devices may be mounted directly next to each other. Exceptions may be necessary, e.g. due to separation distances of intrinsically safe devices. When mounting devices on a vertically installed hat-rail, usually an air gap of a few millimetres should be observed to ensure sufficient ventilation in case of heat accumulation. The lower the temperature in the mounting cabinet, the smaller the gap may be.

Notes for mounting and installation

Mounting and installation have to be performed conform to the valid regulations and the operator is obliged to ensure that they are observed. On devices with intrinsically safe connections, special knowledge in the field of explosion protection is required.

The removable terminal blocks of the devices are coded and can only be inserted into the intended socket. This coding may not be changed or damaged.

Environmental conditions

The devices listed in this catalogue are designed for normal industrial use under normal atmospheric conditions. This does not exclude non-condensing humidity. The operational temperature range is stated for every device. Sources of intensive solar radiation or other heat sources should be avoided.
Use in environments with high-energy radiation should be avoided due to the use of semi-conductor components in the devices. Usage may still be possible after a thorough examination of the application and further clarification by TURCK.

The devices have been designed and developed to the current state-of-the-art in the field or electromagnetic compatibility. Conformity to the respective guidelines is confirmed by the use of the CE mark. However, the operator is urged to ensure that his installation is designed for EMC compatibility.

Removable terminal blocks

interfacemodul and *multisafe*® devices are generally equipped with removable terminal blocks with screw connection. *Cage-clamp* style terminals can also be supplied on request. Terminal blocks of intrinsically safe devices are coded to avoid interchange errors during installation. The coding scheme may not be damaged or altered.

multimodul devices are equipped with screw terminals.

Relay outputs

The use of relay couplers is limited by their relatively low switching frequencies and limited contact life. TURCK uses high quality relays with a mechanical life of at least 20 mio. switching operations.
The electrical life depends strongly on the connected load type and can drop to approx. 1 mio. switching operations, when the relay contacts are subject to maximum load. All switching capacity and switching current indications refer to resistive loads. Lower values apply to inductive or capacitive loads, such as solenoid valves or motors. For inductive loads it is required to observe the relay-specific load limits, which can be provided by TURCK on request. If the relay coupler is directly connected to a contactor, the contactor must be equipped with a protective circuitry at the coil connection. Relays are designed to switch large voltage and current ranges. Once that a high current has been switched, low currents or voltages cannot be switched subsequently.

Electronic outputs

Electronic outputs are typically bounce-free and fast switching devices.
Compared to relay contacts, the current and voltage ranges of an electronic output are clearly defined depending on the kind of output used. Transistor outputs are only suited to low currents and DC voltages, e.g. a PCL input. Switching frequencies are above 1 kHz. In order to protect transistors against overload, they are equipped with a short-circuit protection. Due to the resulting voltage drop it is not possible to switch the low level of TTL inputs. Mosfets are a particular kind of transistor. Based on their special design and circuitry, they can be used to switch AC and DC currents of up to 250 V. Their switching frequency is lower than that of transistors, but the switching current may be higher. Thyristor and Triac outputs are used in high current and AC voltage applications.

Analogue outputs

In addition to switching outputs, analogue voltage and current outputs are also available. A voltage output is a kind of internally regulated voltage source. The output provides a measurable voltage. The minimum load resistance specified in the data sheet must be observed.

When using current outputs, active and passive outputs must be distinguished. Active outputs are an internally regulated current source and provide measurable current signals. The load ratings of the data sheet may not be exceeded. Passive current outputs are internally controlled current sink mode devices. The current sink mode output requires voltage supply

General Technical Data and Guidelines

to control the current flow. Passive current outputs are normally used in conjunction with remote processors featuring input circuits for connection of 2-wire isolating transducers or transmitters.

Voltage supply

The operating voltage range indicated in the data sheets include all admissible tolerances. For safety reasons it is not permitted to exceed these specifications, especially when intrinsically safe circuits are concerned.

Most of the devices are equipped with universal power supplies which operate with AC and DC voltages in a range of 20 to 250 V. The DC-voltage range of associated apparatus is 20...125 VDC.

Time and date processing

With the exception of the PACT*ware*™ compatible devices, **no** processing of the time and date information is undertaken.

Installation of cables

Electrical cables are the connection between field and interface devices and are important functional components of an automation system. Therefore it is advisable to observe some frame conditions when installing cables. Cables must be protected against negative environmental influences.
Chemical resistance, temperature rating, resistance against ultraviolet radiation and applicable operation standards are just some of the parameters which should be taken into account.

By choosing an appropriate installation method it is possible to prevent damages, e.g. through vehicles. When connected to field devices, the cable should be routed in a conduit. If connected to vibrating machines or moving parts, some extra cable should be added as a reserve.
The minimum bending radius must also be observed. Cable manufacturers provide information on cable installation and valuable installation hints. Data integrity and reliability depend strongly on the cable types and installation methods.

Sensor cables should always be installed separately from the power cables. Electromagnetic interferences must also be avoided. Cable connections to motors which are controlled via frequency converters should be protected according to the manufacturer's safety specifications. If long cables are needed, it is recommended to use shielded and earthed cables. The line resistance of sensors may not exceed 50 Ω (EN 60947-5-6); the maximum cable length is determined by the cable's cross-section:

$$l = \frac{R \times S}{\delta}$$

R = line resistance [Ω]
S = cable cross-section [mm^2]
δ = resistivity [$\Omega \times mm^2/m$]
l = cable length [m]

Configuration and parameterisation via PACT*ware*™

PACT*ware*™ stands for "Process Automation Configuration Tool" and is an open-source configuration software in which the manufacturers can integrate the operation of their field devices. The optimisation of the device operation is the primary objective with the PACT*ware*™ concept.

Contrary to the concept of writing to devices via a text file (Device Description = DD), PACT*ware*™ uses a common interface (Field Device Tool = FDT) between the core program and the individual software modules for device operation. Modern and user-friendly operating concepts can be implemented as a result.

FDT specifies an interface in order to use the software modules for field devices (Device Type Manager = DTM) in various applications from differing manufacturers. Some of the TURCK field devices can be configured via PACT*ware*™. The DTMs which are required are contained in a free of charge basic version which is not equipped with all functional features, as well as in a Professional version.

More information about this topic can be found under **www.pactware.de**.
The PACT*ware*™ software and the DTM can be downloaded free from the TURCK homepage **www.turck.com**.

Processor Cards

General data

multicart® modules offer multiple programming possibilities and are thus suited to a wide variety of applications.

There are two ways of altering factory settings:

- a set of toggle switches on the front panel (menu driven)
- or via personal computer (PC)

The attributes of each model are easy to change. Enclosed with each card is a diagram with the programming sequence showing all possible settings for each parameter in several languages.

Front label

All settings necessary for operation of the card are displayed on the front label. The label indications depend on the type of device and can differ from those shown on the right.

During operation or active mode, the green „Power" LED is lit and the display shows the actual value. If a card has setpoint outputs, yellow LEDs indicate if the limit value of the respective output is below the setpoint. The respective setpoint relay and the transistor output de-energise and the LED stays off when the setpoint is reached.

If the card is provided with built-in input alarms for wire-break or short-circuit conditions, the alarm outputs activate during a malfunction, an „ERR" (Error) message appears on the display and the green „Power" LED changes to red.
If a card has setpoint outputs for status indications, the outputs de-activate (relay de-energised, transistor not conducting), unless no other parameters have been programmed.

Parameter programming with buttons

Menu-assisted adjustments are carried out with the two buttons on the front of the card. ESC up (left top button on the front panel) interrupts the monitoring operation and the „Power" LED turns off. The programming LED „Progr." illuminates and „PARA" appears in the display to indicate that the first parameter can be set.

Each of the parameters of the main menu can be selected with the right button.
The selected parameter is verified by parameter value appearing in the display, or a message prompt referring to a submenu.

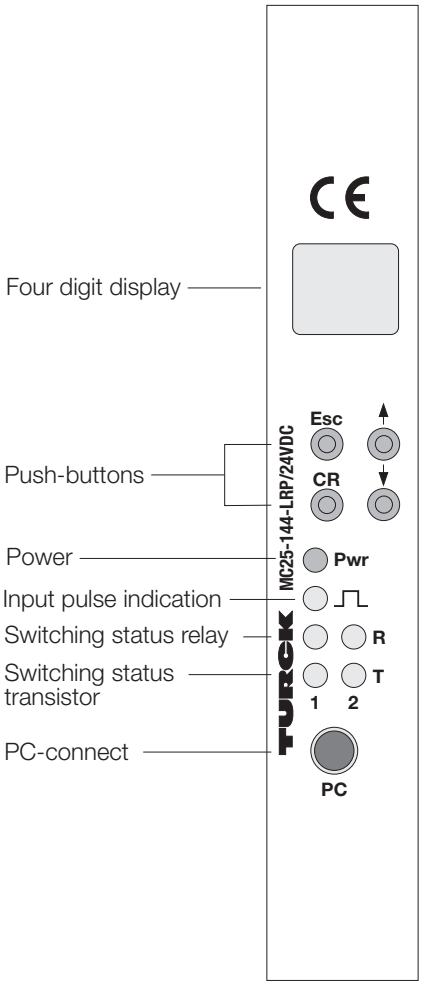

On each card, the first card parameter indicating „PARA" in the display is a submenu used to access and program all specific parameters.

The selected parameter is verified by activating ENTER (left button in down position). When a submenu has been selected, the parameter value is adjusted using the right toggle switch. Activating ENTER a second time saves the adjusted parameter.

The right hand buttons are used to change the parameters. If the desired value has been set, activating the ENTER key saves the parameter. „SAVE" will briefly appear in the display to indicate that the parameter has been saved. Switching to ESC terminates adjustment of the selected parameter without saving.

ESC is used to switch between the submenu and the main menu. A second activation of the ESC switch initiates display of the actual measurement value and the "Power" LED illuminates.

Processor Cards

Parameter programming via PC

For parameter programming via PC, the MC-IM-232 adapter is required. This adapter connects the card with the V.24/ RS232 interface of the PC. The adapter has a built-in power supply for parameter programming without supplemental power.

The adapter comes with a programming software package used for message development, off-line storage on a PC and data transfer to a printer.

ESC (the left top button on the front panel) can be controlled via the PC so that parameter adjustments via toggle switches are disabled. Enabling of the ESC function can now only be done via PC.

If a DTM (Device Type Manager, see page A – 22) is available for the card, it should be parameterised using the PACT*ware*™ configuration software. The operating manual is included with the respective devices.

Scanning of parameters

Each parameter can be scanned while the system is operating. To do this, activate the right top button (up) until the desired parameter is displayed.

Using ESC (the left top button switch on the front panel) returns the card to the measuring mode and display of actual data. This can also be done when the ESC key is disabled. If no button is activated for 10 seconds, the display automatically resets to the actual value.

Saving of parameters

All card parameters are saved in case of power failure in an EEPROM memory.

ESC lockout

Unauthorised front panel changes can be prevented by lockout of the ESC toggle switch. This is done as follows:

– plug the connector (included with the card) into the V.24/RS232 interface of the card
– de-activate the ESC key via the PC program (see above).

The parameter scan during systems operation is not affected by the lockout of the ESC key.

TURCK

1

ISOLATING SWITCHING AMPLIFIER

Hans Turck GmbH & Co.KG • D–45466 Mülheim/Ruhr • Tel. 0208/4952-0 • Fax 0208/4952-264 • E-Mail: turckmh@mail.turck-globe.de • www.turck.com

Isolating Switching Amplifiers Selection Guide

Housing Style *interfacemodul*

Type / Housing	IM12-17-R	IM12-18-R	IM12-22Ex-R	IM1-121Ex-R	IM1-22Ex-R	IM1-44Ex-R	IM1-44Ex-T	IM1-451Ex-R	IM1-451Ex-T
Functions									
Isolating switching amplifier (TSV)			•	•	•	•	•	•	•
TSV with pulse totalizer									
Switching amplifier	•	•							
Number of channels	1	2	2	1	2	4	4	4	4
Galvanic Isolation									
Input to output	•	•	•	•	•	•	•	•	•
Output to power	•	•	•	•	•	•	•	•	•
Input to power	•	•	•	•	•	•	•	•	•
Input circuit acc. to EN 60947-5-6			•	•	•	•	•	•	•
Intrinsically safe acc. to EN 50020			•	•	•	•	•	•	•
Not intrinsically safe	•	•							
Input Circuit Monitoring									
Wire-break (WB) and short-circuit (SC)									
WB and SC, user programmable				•	•	•	•	•	•
Switching Frequency									
≤ 10 Hz			•	•	•	•		•	
≤ 200 Hz									
≤ 500 Hz									
≤ 1 kHz									
≤ 2 kHz									
≤ 3 kHz							•		•
≤ 5 kHz (dynamic)									
Output Circuits per Channel									
Relay, 1 NO contact (S)/ SPDT (U)	2 S	1 S	1 S	2 S	1 S	1 S		1 S	
Transistor, potential-free							1		1
Transistor, pnp									
Transistor, npn									
Transistor with complementary output									
Alarm Output				1				1	1
Switching Options									
NO (A)									
NC (R)									
NO or NC, programmable			•	•	•	•	•	•	•
Supply Voltage									
10…30 VDC									
24 VDC	•		•	•	•				
115 VAC									
230 VAC	•	•	•	•	•				
Special voltages									
Universal power supply						•	•	•	•
(20…250 VAC/20…125 VDC)						•	•	•	•
Data sheet – see page	9	11	13	15	17	19	21	23	25

Isolating Switching Amplifiers Selection Guide

Housing Style *multimodul multisafe®*

Type / Housing	MK1-11-R	MK1-2AP	MK1-2RP	MK1-22-R	MK1-22N-Ex0	MK1-22P-Ex0	MK13-N-Ex0	MK13-P-Ex0	MK13-NF-Ex0	MK13-PF-Ex0	MK13-PN-Ex0	MK13-R-Ex0	MK13-11Ex0-R	MK13-11Ex0-T	MK13-12Ex0-R	MK13-12Ex0-T	MK13-12Ex0-DZ	MK13-121Ex0-R	MK13-121Ex0-T	MK13-22N-Ex0	MK13-22P-Ex0
Functions																					
Isolating switching amplifier (TSV)					●	●	●	●	●	●	●	●	●	●	●	●	●	●	●	●	●
TSV with pulse totalizer																					
Switching amplifier	●	●	●	●																	
Number of channels	1	2	2	2	2	2	1	1	1	1	1	1	1	1	1	1	1	1	1	2	2
Galvanic Isolation																					
Input to output	●			●	●	●	●	●	●	●	●	●	●	●	●	●	●	●	●	●	●
Output to power	●			●								●	●	●	●	●	●	●	●		
Input to power	●[1]			●[1]	●	●	●	●	●	●	●	●	●	●	●	●	●	●	●	●	●
Input circuit acc. to EN 60947-5-6	●	●	●	●	●	●	●	●	●	●	●	●	●	●	●	●	●	●	●	●	●
Intrinsically safe acc. to EN 50020					●	●	●	●	●	●	●	●	●	●	●	●	●	●	●	●	●
Not intrinsically safe	●	●	●	●																	
Input Circuit Monitoring																					
Wire-break (WB) and short-circuit (SC)																					
WB and SC, user programmable							●	●	●	●	●	●	●	●	●	●	●	●	●	●	●
Switching Frequency																					
≤ 10 Hz	●			●								●	●		●			●			
≤ 200 Hz																					
≤ 500 Hz																					
≤ 1 kHz		●	●											●		●	●				
≤ 2 kHz																					
≤ 3 kHz					●	●	●	●	●	●	●									●	●
≤ 5 kHz																					
Output Circuits per Channel																					
Relay, 1 NO contact (S)/ SPDT (U)	1U			1U								1S	1U		2U			1U			
Transistor, potential-free														1		2	●		1		
Transistor, pnp		1	1			1		2		2	1										1
Transistor, npn					1		2		2		1									1	
Transistor with complementary output							●	●	●	●											
Alarm Output									●	●								●	●		
Switching Options																					
NO (A)		●					●	●													
NC (R)			●				●	●													
NO or NC, programmable	●			●	●	●			●	●	●	●	●	●	●	●	●	●	●	●	●
Supply Voltage																					
10…30 VDC							●	●	●	●	●		●	●	●	●		●	●		
24 VDC	●	●	●	●	●	●						●								●	●
115 VAC	●			●									●	●	●	●		●	●		
230 VAC	●			●									●	●	●	●	●	●	●		
Special voltages	●			●			●					●									
Universal power supply (20…250 VAC/20…125 VDC)																					
Data sheet – see page	27	29	29	31	33	33	35	35	37	37	39	41	43	45	47	49	51	53	55	57	57

1) only for 230 VAC version

Hans Turck GmbH & Co.KG • D–45466 Mülheim/Ruhr • Tel. 0208/4952-0 • Fax 0208/4952-264 • E-Mail: turckmh@mail.turck-globe.de • www.turck.com

multi modul

MK13-22Ex0-R	MK13-22Ex0-T	MK13-231Ex0-R	MK13-231Ex0-T	MK13-33Ex0-R	MK13-33Ex0-T	MK13-451Ex0-R	MK13-451Ex0-T	MK15-12Ex0-PN
•	•	•	•	•	•	•	•	•
2	2	2	2	3	3	4	4	1
•	•	•	•	•	•	•	•	•
•	•	•	•	•	•	•	•	•
•	•	•	•	•	•	•	•	•
•	•	•	•	•	•	•	•	•
•	•	•	•	•	•	•	•	•
•	•	•	•	•	•	•	•	
•		•		•		•		
	•							
			•		•		•	
								•
1U		1S		1S		1S		
	1		1		1		1	
								1
								1
•	•	•	•	•	•	•	•	•
•	•	•	•	•	•	•	•	•
•	•	•	•	•	•	•	•	
•	•	•	•	•	•	•	•	
59	61	63	65	67	69	71	73	75

multi safe®

MS1-12Ex0-R	MS1-22Ex0-R	MS1-33Ex0-R	MS1-33Ex0-T	MS13-11Ex0-T	MS13-12Ex0-R	MS13-12Ex0-T	MS13-22Ex0-R	MS13-22Ex0-T	MS13-231Ex0-R	MS13-231Ex0-T	MS13-33Ex0-R	MS13-33Ex0-T
•	•	•	•	•	•	•	•	•	•	•	•	•
1	2	3	3	1	1	1	2	2	2	2	3	3
•	•	•	•	•	•	•	•	•	•	•	•	•
•	•	•	•	•	•	•	•	•	•	•	•	•
•	•	•	•	•	•	•	•	•	•	•	•	•
•	•	•	•	•	•	•	•	•	•	•	•	•
•	•	•	•	•	•	•	•	•	•	•	•	•
							•	•	•	•	•	•
				•	•	•						
•	•	•			•		•		•		•	
			•	•		•		•		•		•
2U	1U	1S			2U		1U		1S		1S	
			3	1		2		1		1		1
					•	•			•	•		
•	•	•	•	•	•	•	•	•	•	•	•	•
•	•	•	•	•	•	•	•	•	•	•	•	•
•	•	•	•	•	•	•	•	•	•	•	•	•
77	79	81	83	85	87	89	91	93	95	97	99	101

Isolating Switching Amplifiers Selection Guide

Housing Style *multicart®*

Type / Housing	MC13-241AEx0-R	MC13-241AEx0-T	MC13-41AEx0-RP	MC13-441AEx0-R	MC13-441AEx0-T	MC13-451AEx0-R	MC13-451AEx0-P	MC13-451AEx0-RP	MC13-451AEx0-T	MC13-452AEx0-RP	MC13-481AEx0-R	MC13-8AEx0-P	MC13-8AEx0-R	MC16-41AEx0-RP	MC16-42AEx0-TP
Functions															
Isolating switching amplifier (TSV)	•	•		•	•	•	•	•	•	•	•	•	•	•	•
TSV with pulse totalizer			•												
Switching amplifier															
Number of channels	2	2	4	4	4	4	4	4	4	4	4	8	8	4	4
Galvanic Isolation															
Input to output	•	•	•	•	•	•	•	•	•	•	•	•	•	•	•
Output to power	•	•	•	•	•	•		•	•	•	•		•	•	•
Input to power	•	•	•	•	•	•	•	•	•	•	•	•	•	•	•
Input circuit acc. to EN 60947-5-6	•	•	•	•	•	•	•	•	•	•	•	•	•	•	•
Intrinsically safe acc. to EN 50020	•	•	•	•	•	•	•	•	•	•	•	•	•	•	•
Not intrinsically safe															
Input Circuit Monitoring															
Wire-break (WB) and short-circuit (SC)															
WB and SC, user programmable	•	•	•	•	•	•	•	•	•	•	•	•	•	•	•
Switching Frequency															
≤ 10 Hz	•		•	•		•		•		•	•		•		
≤ 25 Hz														•	
≤ 200 Hz												•			
≤ 500 Hz															
≤ 1 kHz				•			•		•		•				•
≤ 2 kHz															
≤ 3 kHz															
≤ 5 kHz (dynamic)															
Output Circuits per Channel															
Relay, 1 NO contact (S) / SPDT (U)	2U		1U	1U		1U		1U		1U			1S	2U	
Transistor, potential-free		2			1				1						
Transistor, pnp			1				1	1		1		1		2	4
Transistor, npn															
Transistor with complementary output															
Alarm Output	•	•	•	•	•	•	•	•	•	•	•	•	•	•	•
Switching Options															
NO (A)															
NC (R)															
NO or NC, programmable	•	•	•	•	•	•	•	•	•	•	•	•	•	•	•
Supply Voltage															
10…30 VDC															
24 VDC	•	•	•	•	•	•	•	•	•	•	•	•	•	•	•
115 VAC															
230 VAC															
Special voltages															
data sheet – see page	**catalogue *multicart®***														

Hans Turck GmbH & Co.KG • D–45466 Mülheim/Ruhr • Tel. 0208/4952-0 • Fax 0208/4952-264 • E-Mail: turckmh@mail.turck-globe.de • www.turck.com

Isolating Switching Amplifiers

Isolating switching amplifiers

Switching amplifiers are used in almost all industrial applications where binary switching signals have to be transmitted from a hazardous area to a non-hazardous area. These amplifiers may be connected to:

- sensors acc. to EN 60947-5-6 (NAMUR)
- mechanical contacts

The components selected to make up an intrinsically safe circuit must exactly match the technical parameters specified in the conformity certificate (see page A – 19).

Switching amplifiers with intrinsically safe circuits are defined as associated apparatus according to EN 50014/20 standards and may not be installed in hazardous areas.

Design and functions

The wiring diagram shows a typical sensor - amplifier configuration.

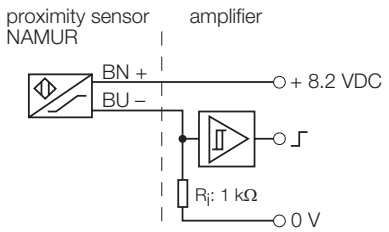

Fig. 1: Configuration of a switching amplifier

A constant voltage of typically 8.2 VDC is applied to the terminals of an input circuit. A source impedance or internal resistor (R_i, typ. 1 kΩ) senses the current flow passing through the sensor at that voltage. When the proximity sensor per EN 60947-5-6 (NAMUR) is damped, the current flow in the input circuit changes. The current differential from the undamped to the damped state is used to trigger the amplifer at a defined switching point and, thus, the analogue signal is converted into a digital signal.

The standard for the sensor/amplifier function is set forth by EN 60947-5-6 and specifies all essential data. Fig. 2 illustrates a typical output curve of an inductive sensor per EN 60947-5-6 (NAMUR) at nominal operating conditions: (U_0 = 8,2 V ± 0,1 V; R_i = 1 kΩ ± 1 %; T_U = 20 °C ± 2 °C).

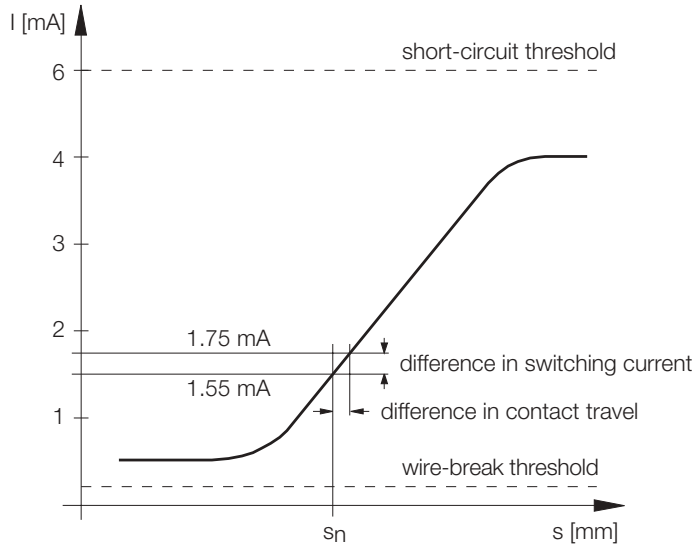

Fig. 2: Typical output curve – inductive sensor to EN 60947-5-6 (NAMUR)

The current range in which a switching signal occurs is between 1.2 and 2.1 mA. TURCK switching amplifiers are typically calibrated for 1.55 mA to which an internal switching hysteresis of typ. 0.2-0.4 mA is added. This switching current difference results in a contact travel difference which may be up to 10 % of the nominated switching distance of a sensor (depending on sensor type).

An operational example of this is:

- a change in the output signal (from 0 to 1 – OFF to ON) at or above 1.55 mA
- a change in the output signal (from 1 to 0 – ON to OFF) when below 1.75 mA

Input circuit monitoring

NAMUR sensors (in conformance with EN 60947-5-6) are always in a low impedance state < 400 Ω, irrespective of their operational status. On the other hand, they feature a maximum resistance to ensure a minimum current flow of > 0.05 mA. These limit values can be used for short-circuit and wire-break monitoring in the input circuit of the amplifier. For this it is necessary to simply add two switching thresholds to the input circuit.

If a wire-break or short-circuit of the input circuit is detected, the respective output turns off. Some switching amplifiers are equipped with an additional alarm output. If there is no input circuit error, the alarm output is on. If an error is detected, the respective output and the alarm output turn off. (see page 1 – 8, table 3).

Mechanical contacts may be used as input devices instead of sensors. For these applications, the conditions for the operating values in the input circuit change due to the missing resistance. Mechanical contacts would look like a wire-break or short-circuit to a switching amplifier with circuit monitoring features: when the contact is open, the current flow is interrupted and when the contacts are closed, the input circuit is short-circuited.

The advantages provided by the monitoring feature are also available when using mechanical contacts as input devices by connecting shunt resistors, which simulate NAMUR type sensors, to the contacts.

Isolating Switching Amplifiers

The following drawings show possible combinations of the resistor circuitry for input circuit monitoring.

– short-circuit monitoring:

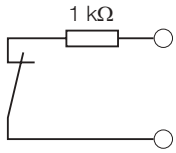

– or wire-break and short-circuit monitoring:

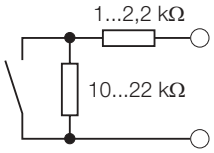

If the circuit monitoring function is to be extended to the entire input circuit, a resistor must be connected directly to the contact. This resistor circuitry can be ordered as a ready-made module (type WM1- see chapter 9, page 3).

When using multichannel devices with the circuit monitoring features, any unused inputs must be bridged by a resistor (10...22 kΩ) to disable input circuit monitoring (in case input monitoring cannot be disabled separately for each channel). Thus, superfluous error indications are avoided.

TURCK switching amplifiers are available in the following versions:

– without input circuit monitoring (for NAMUR sensors and mechanical contacts)
– with permanent wire-break monitoring (for NAMUR sensors and mechanical contacts with resistor circuit)
– with wire-break and short-circuit monitoring
– with programmable wire-break and short-circuit monitoring (for NAMUR sensors and mechanical contacts which are bridged by a resistor depending on the selected monitoring function)

Output function mode

The output function mode is adjusted via the switching amplifier and characterises the output's switching performance in relation to the corresponding input. Important terms used in this context are "load current mode/normally open mode (NO)" and "no load current mode/normally closed mode (NC)" which refer to the output's switching mode when using a mechanical contact as an input device. These functions are reversed when a NAMUR sensor is used as an input device – except for capacitive sensors and TURCK's magnetic field sensors series *„permaprox®"*.

Load current mode (NO - normally open mode): the output is energised when the input contact is closed or the inductive NAMUR sensor is undamped.

No load current mode (NC - normally closed mode): the output is energised when the input contact is open or the inductive NAMUR sensor is damped.

Tables 3 and 4 show these functions for devices with and without input circuit monitoring.

Installation guidelines

The sensor-specific installation requirements are listed in the according sensor catalogues (switching distance, ambient conditions etc). It is essential to meet these requirements to ensure correct operation. When laying sensor cables it is necessary to observe the following guidelines:

– the sensor cable should be routed separately from the power cable
– prevent electro-magnetic interferences
– if long cables are used, it is recommended to use shielded and earthed cables
– the line resistance may not exceed 50 Ω (EN 60947-5-6); the maximum cable length is determined by the cable's cross-section:

$$l = \frac{R \times S}{\delta}$$

R = line resistance [Ω]
S = cable cross-section [mm²]
δ = resistivity [Ω x mm²/m]
l = cable length [m]

Table 3

Function truth table
switching amplifiers with input circuit monitoring

	induct. sensor EN 60947-5-6 (NAMUR)	dry contact	normal switching output status	normal alarm output status	short or wire-break switching output status	short or wire-break alarm output status
load current mode (N.O.)			0	1	0	0
			1	1	0	0
no load current mode (N.C.)			1	1	0	0
			0	1	0	0

Table 4

function truth table - switching amplifiers

	induct. sensor EN 60947-5-6 (NAMUR)	dry contact	output status
load current mode (N.O.)			0
			1
no load current mode (N.C.)			1
			0

 Hans Turck GmbH & Co.KG • D–45466 Mülheim/Ruhr • Tel. 0208/4952-0 • Fax 0208/4952-264 • E-Mail: turckmh@mail.turck-globe.de • www.turck.com

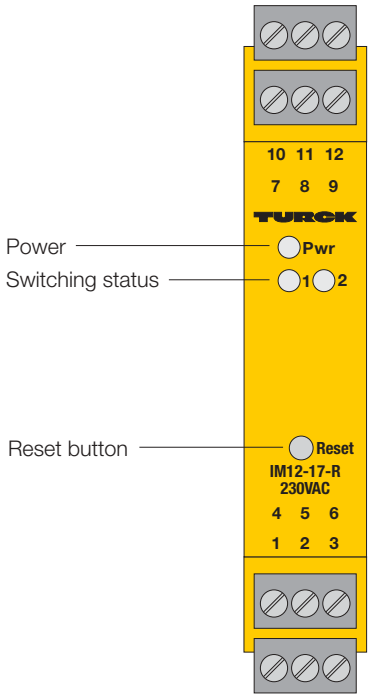

Switching Amplifier IM12-17-R/24VDC IM12-17-R/230VAC 1-channel

1

- **1-channel switching amplifier**
- **Latching of output state after tripping**
- **Switching status is retained during power failure**
- **Galvanic isolation between input circuit, output circuit and supply voltage**
- **2 complementary relay outputs with one NO contact each**
- **Removable terminal blocks**

The single channel switching amplifier IM12-17-R/... serves to monitor the switching status of mechanical NC contacts. The output is equipped with two complementary relays with one NO contact each. These NO contacts signal opening of the monitored mechanical contact which must be closed during normal operation. In this case, relay 1 is energised (NO contact closed) and relay 2 is de-energised (NO contact open).
If the monitored mechanical contact opens, both relays change state and retain this switching state until the front panel reset button (or an externally connected reset button) is activated. The relays always have to be reset to return to their initial position (relay 1 energised, relay 2 de-energised).

If a power supply failure occurs, both relays de-energise. After re-applying power, the same switching status as before the power failure is restored.
This enables retaining an error state during a power supply failure. The input circuit and external reset buttons are galvanically isolated from the output and the power supply.

The switching status of both relays is indicated via the yellow LEDs; the green LED signals that power is applied to the device.

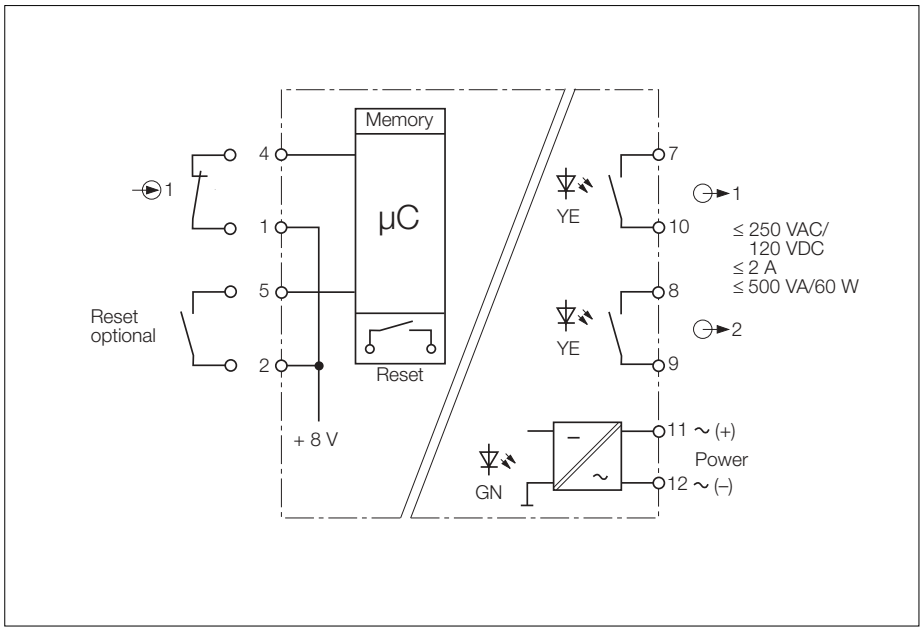

Switching Amplifier IM12-17-R

Use of bimetal switches for motor temperature monitoring

A bimetal switch, which is integrated in a motor for temperature control purposes, can be monitored by the IM12-17-R The bimetal contact must open if the operating temperature is exceeded; consequently the relays will change their switching state. The relays retain this state (even if the motor cools off) until the internal or an optional external reset button is activated. If a power failure occurs both relays de-energise. If power is re-applied the relays return to the same switching status as before the power failure. This function prevents a defect motor from re-starting after a power failure.

Galvanic isolation	between input circuit and output circuit and supply voltage for 250 V_{rms}, test voltage 2.5 kV_{rms}
Input circuits	
Operating characteristics	
– Voltage	8 V
– Current	8 mA
Switching threshold	1.55 mA
Hysteresis	typ. 0.2 mA
Output circuits	2 relay outputs: 2 x SPDT
Switching voltage	≤ 250 VAC/120 VDC
Switching current per output	≤ 2 A
Switching capacity per output	< 500 VA/60 W
Switching frequency	≤ 10 Hz
Contact material	silver-alloy + 3 µm Au
LED indications	
– Switching status	2 x yellow
– Power	green
Housing	12-pole, 18 mm wide, Polycarbonate/ABS flammability class V-0 per UL 94
Mounting	snap-on clamps for top-hat rail (DIN 50022) or screw terminals for panel mounting
Connection	removable terminal blocks, reverse-polarity protected, screw connection, self-lifting
Connection profile	≤ 1 x 2.5 mm² or 2 x 1.5 mm² with wire sleeves
Degree of protection (IEC 60529/EN 60529)	IP20
Operating temperature	-25…+60 °C

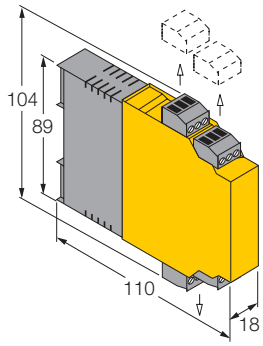

Type	Ident-no.	Supply Voltage U_B	Line frequency	Ripple W_{PP}	Power-/Current consumption
IM12-17-R/230VAC	7540031	195...253 VAC	48…62 Hz	–	≤ 30 mA_{eff}
IM12-17-R/24VDC	7540030	19...29 VDC	–	–	–

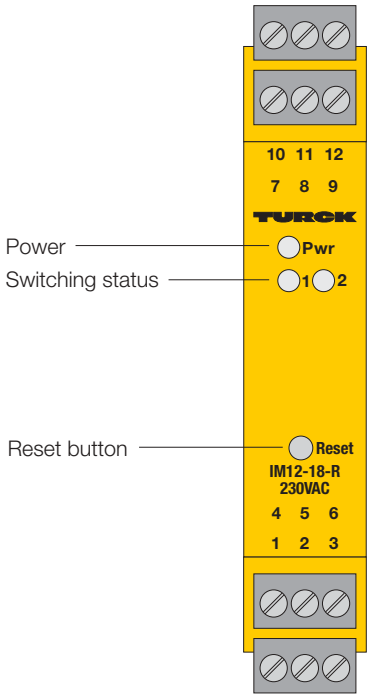

Switching Amplifier IM12-18-R/230VAC 2-channel

- **2-channel switching amplifier**
- **Latching of output state after tripping of channel 1**
- **Switching status is retained during power failure**
- **Galvanic isolation between input circuit, output circuit and supply voltage**
- **2 complementary relay outputs with one NO contact each**
- **Removable terminal blocks**

The two-channel switching amplifier IM12-18-R serves to monitor the switching status of mechanical NO contacts.
The output is equipped with two complementary relays with one NO contact each. These NO contacts signal opening of a monitored contact. A non-volatile memory is activated by opening of the contact on input circuit 1 (terminals 1 and 4).

In the normal state, the contacts to be monitored must be closed. Then relay 1 is energised (NO contact closed) and relay 2 is de-energised (NO contact open). The relays retain this state until the front panel reset button is pressed. Only then the relays will return to their initial position (relay 1 energised, relay 2 denergised).

On the other hand, opening a contact in input circuit 2 also results in relay 1 being de-energised, however the relay will return to its initial state as soon as the contact closes again.

If a power supply failure occurs, both relays de-energise. After re-applying power, the same switching status as before the power failure is restored.This enables retaining an error state during a power supply failure. A fault state detected on input channel is recovered in the same way after the power is reapplied. The input circuit and external reset buttons are galvanically isolated from the output and the power supply.
The switching status of both relays is indicated via the yellow LEDs; the green LED signals that power is applied to the device.

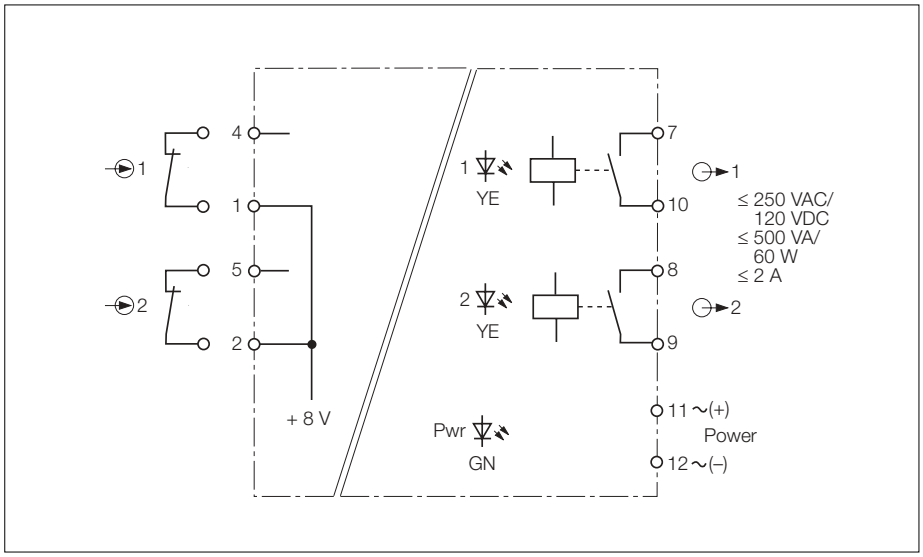

Switching Amplifier IM12-18-R

Application: Use of bimetal switches for motor temperature monitoring with pre-warning

Two bimetal contacts integrated into a motor for temperature monitoring can be monitored with the IM12-18-R/...
The bimetals must be designed so that they actuate at different temperatures. This shuts the motor off briefly at an uncritical increased motor temperature. The motor is switched off permanently at a critical overtemperature. Each bimetal contact must open when its operating temperature is exceeded.

The switching amplifier is designed so that the pre-warning bimetal (uncritical increased temperature) is connected to terminals 2 and 5. If this bimetal contact opens, the NO contact on terminals 7 and 10 de-energises. The motor can be shut down by this reaction. This state is not saved. When the motor has cooled down, the bimetal closes and the relay energises restarting the motor.

The most useful application entails using output 1 to shut down the motor and output 2 to signal the critical state.

The bimetal which detects critical overtemperature is connected to terminals 1 and 4. If the bimetal actuates, both relay's change their switching states. The relays retain this state (even if the motor cools off) until the reset button is pressed. If the power supply fails both relays de-energise. If power is re-applied he relays return to the same switching status as before the power failure. This function prevents a defective starting after a power failure.

Type	IM12-18-R/230VAC
Ident-no.	7540032
Supply voltage U_B	195...253 VAC
Line frequency	48...62 Hz
Current consumption	≤ 30 mA
Galvanic isolation	between input circuit and output circuit and supply voltage for 250 V_{rms} test voltage 2.5 kV_{rms}
Input circuits	
Operating characteristics	
– Voltage	8 V
– Current	8 mA
Switching threshold	1.55 mA
Hysteresis	typ. 0.2 mA
Output circuits	2 relay outputs: 2 x NO contacts
Switching voltage	≤ 250 VAC/120 VDC
Switching current per output	≤ 2 A
Switching capacity per output	< 500 VA/60 W
Switching frequency	≤ 10 Hz
Contact material	silver-alloy + 3 µm Au
LED indications	
– Switching status	2 x yellow
– Power	green
Housing	12-pole, 18 mm wide, Polycarbonate/ABS flammability class V-0 per UL 94
Mounting	snap-on clamps for top-hat rail (DIN 50022) or screw terminals for panel mounting
Connection	removable terminal blocks, reverse-polarity protected, screw connection, self-lifting
Connection profile	≤ 1 x 2.5 mm² or 2 x 1.5 mm² with wire sleeves
Degree of protection (IEC 60529/EN 60529)	IP20
Operating temperature	-25…+60 °C

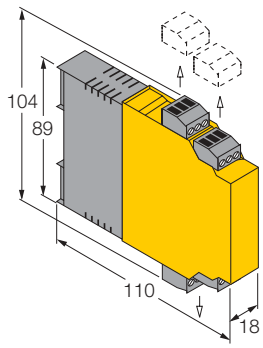

 Hans Turck GmbH & Co.KG • D–45466 Mülheim/Ruhr • Tel. 0208/4952-0 • Fax 0208/4952-264 • E-Mail: turckmh@mail.turck-globe.de • www.turck.com

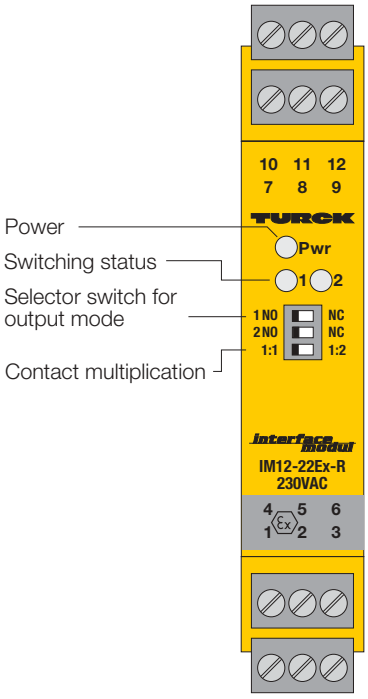

Isolating Switching Amplifier IM12-22Ex0-R/24VDC IM12-22Ex0-R/230VAC 2-channel

1

- **2-channel isolating switching amplifier with removable terminal blocks**
- **Intrinsically safe input circuits EEx ia**
- **Area of application according to ATEX: II (1) GD**
- **Galvanic isolation between input circuits, output circuits and supply voltage**
- **2 relay outputs with one NO contact each**
- **Selectable NO/NC output function**
- **Adjustable signal multiplication**

The isolating switching amplifiers IM12-22Ex0-R feature 2 channels and intrinsically safe input circuits. They can be used in conjunction with sensors conforming to EN 60947-5-6 (NAMUR), variable resistors or potential-free contacts. The output circuits each feature one relay with one NO contact each.

The output mode (normally open mode = NO/normally closed mode = NC) can be adjusted via 3 front panel switches separately for each channel. A signal multiplying function can also be adjusted. Here the switching status of channel 1 is transferred to outputs 1 and 2.

The output mode can also be adjusted separately for each channel.

A green LED on the front indicates that the device is powered. The two yellow LEDs indicate the switching status of the relay.

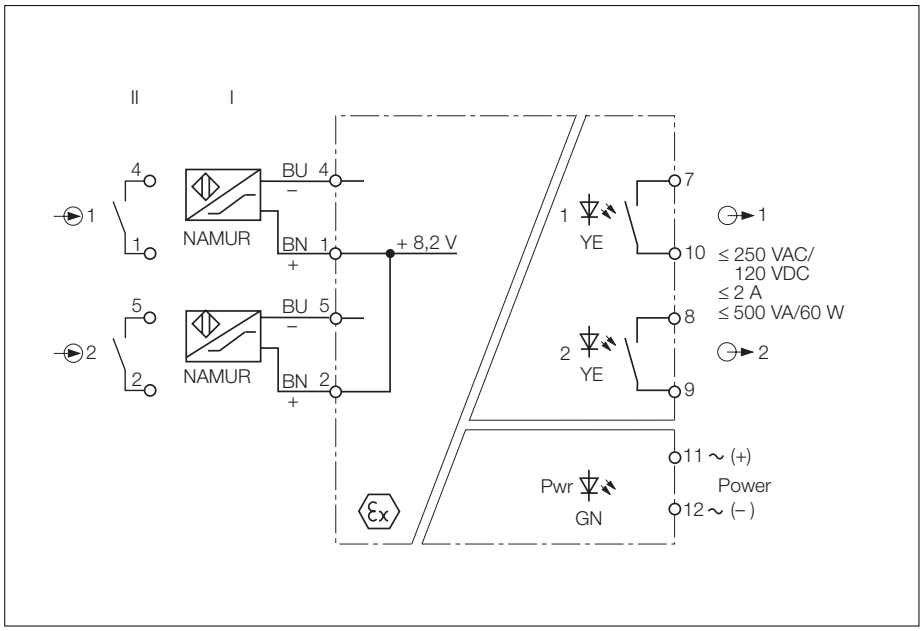

Isolating Switching Amplifier IM12-22Ex-R

Type	IM12-22Ex0-R/230VAC	IM12-22Ex0-R/24VDC
Ident-no.	7505641	7505640
Supply voltage U_B	196...253 VAC	10...30 VDC
Line frequency/ripple W_{PP}	48...62 Hz	≤ 10 %
Power/current consumption	≤ 30 mA_{rms}	≤ 1.5 W
Galvanic isolation	between input circuit, output circuit and supply voltage for 250 V_{rms}, test voltage 2.5 kV_{rms}	between input circuit, output circuit and supply voltage for 250 V_{rms}, test voltage 2.5 kV_{rms}
Input circuits	according to EN 60947-5-6 (NAMUR), intrinsically safe according to EN 50020	according to EN 60947-5-6 (NAMUR), intrinsically safe according to EN 50020
Operating characteristics		
– Voltage	8.2 V	8.2 V
– Current	8.2 mA	8.2 mA
Switching threshold	1.55 mA	1.55 mA
Hysteresis	typ. 0.2 mA	typ. 0.2 mA
Output circuits	2 relay outputs (NO)	2 relay outputs (NO)
Switching voltage	≤ 250 VAC/120 VDC	≤ 250 VAC/120 VDC
Switching current per output	≤ 2 A	≤ 2 A
Switching capacity per output	≤ 500 VA/60 W	≤ 500 VA/60 W
Switching frequency	≤ 10 Hz	≤ 10 Hz
Contact material	silver-alloy + 3 µm Au	silver-alloy + 3 µm Au
Ex-approval acc. to certificate of conformity	PTB 00 ATEX 2033	PTB 00 ATEX 2033
Maximum nominal values		
– No load voltage U_0	≤ 9,6 V	≤ 9,6 V
– Short-circuit current I_k	≤ 21,4 mA	≤ 21,4 mA
Max. external inductances/capacitances L_0/C_0		
– [EEx ia] IIC	3,6 µF/300 mH	3,6 µF/300 mH
– [EEx ib] IIB	26 µF/1000 mH	26 µF/1000 mH
Marking of devices	II (1) GD [EEx ia] IIC	II (1) GD [EEx ia] IIC
LED indications		
– Power	green	green
– Switching status	2 x yellow	2 x yellow
Housing	12-pole, 18 mm wide, Polycarbonate/ABS, flammability class V-0 per UL 94	
Mounting	snap-on clamps for top-hat rail (DIN 50022) or screw terminals for panel mounting	
Connection	removable terminal blocks, reverse-polarity protected, screw connection	
Connection profile	≤ 1 x 2.5 mm^2 or 2 x 1.5 mm^2 with wire sleeves	
Degree of protection (IEC 60529/EN 60529)	IP20	
Operating temperature	-25…+60 °C	

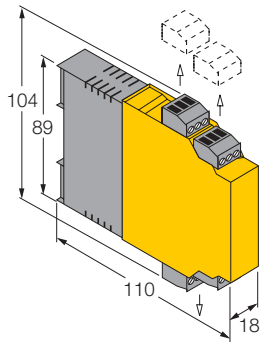

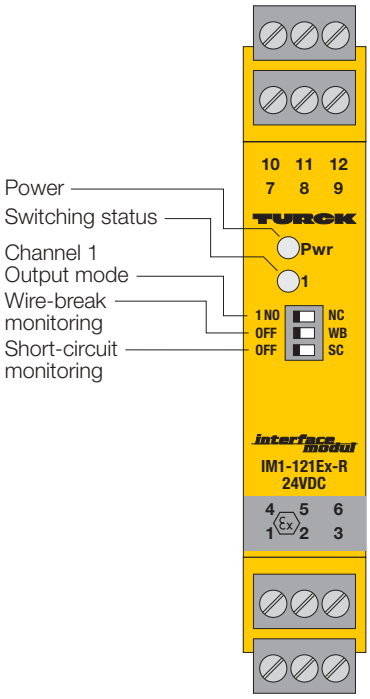

Isolating Switching Amplifier IM1-121Ex-R/24VDC IM1-121Ex-R/230VAC 1-channel

1

- **1-channel isolating switching amplifier with removable terminal blocks**
- **Intrinsically safe input circuit EEx ia**
- **Area of application according to ATEX: II (1) GD**
- **Input circuit monitoring for wire-break and short-circuit (can be disabled)**
- **Galvanic isolation between input circuits, output circuits and supply voltage**
- **2 relay outputs, each with one NO contact, one of the outputs assigned for alarm signals**
- **Selectable NO/NC output function**

The isolating switching amplifiers type IM1-121Ex-R/... are single channel devices featuring intrinsically safe input circuits. They can be connected to sensors according to EN 60947-5-6 (NAMUR), variable resistors or potential-free contacts.

The output circuits feature two relays each with one NO contact; one of the relays is assigned as an alarm output.

Three front panel programming switches select the output function (normally open mode = NO/or normally closed mode = NC) and enable separate activation and de-activation of wire-break (WB) and short-circuit (SC) monitoring.

When using mechanical contacts as the input device, wire-break and short-circuit monitoring must be disabled or shunt resistors must be connected to the contacts (II). (See next page for contact configuration).

The green LED on the front cover indicates that the device is powered. The dual colour LED indicates the switching status (yellow) as well as fault conditions (red). When the input circuit monitoring feature is activated, red illuminates to indicate a fault in the input circuit and the respective output and alarm relay is de-energised.

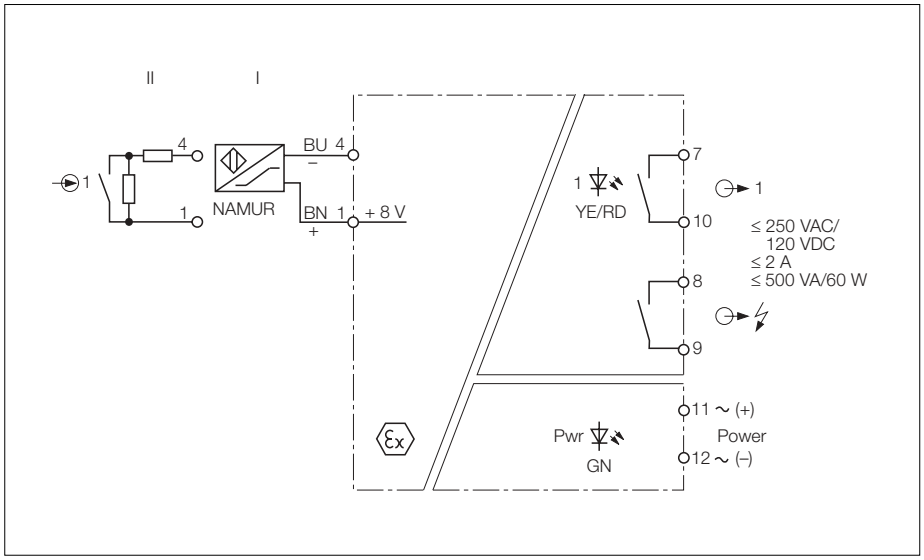

Isolating Switching Amplifier IM1-121Ex-R

Type	IM1-121Ex-R/230VAC	IM1-121Ex-R/24VDC
Ident-no.	–	7541225
Supply voltage U_B	196...253 VAC	10...30 VDC
Line frequency/ripple W_{PP}	48...62 Hz	≤ 10 %
Power/current consumption	≤ 30 mA_{rms}	≤ 1.5 W
Galvanic isolation	between input circuit, output circuit and supply voltage for 250 V_{rms} test voltage 2.5 kV_{rms}	between input circuit, output circuit and supply voltage for 250 V_{rms} test voltage 2.5 kV_{rms}
Input circuits	according to EN 60947-5-6 (NAMUR), intrinsically safe according to EN 50020	according to EN 60947-5-6 (NAMUR), intrinsically safe according to EN 50020
Operating characteristics		
– Voltage	8 V	8 V
– Current	8 mA	8 mA
Switching threshold	1.55 mA	1.55 mA
Hysteresis	typ. 0.2 mA	typ. 0.2 mA
Wire-break threshold	≤ 0.1 mA	≤ 0.1 mA
Short-circuit threshold	≥ 6.0 mA	≥ 6.0 mA
Contact configuration Of mechanical switches with active input circuit monitoring function	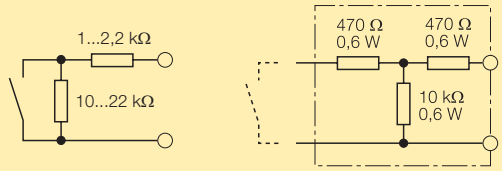	resistor module WM1, ident-no. 0912101
Output circuits	2 relay outputs with 1 NO contact each	2 relay outputs with 1 NO contact each
Switching voltage	≤ 250 VAC/120 VDC	≤ 250 VAC/120 VDC
Switching current per output	≤ 2 A	≤ 2 A
Switching capacity per output	≤ 500 VA/60 W	≤ 500 VA/60 W
Switching frequency	≤ 10 Hz	≤ 10 Hz
Contact material	silver-alloy + 3 µm Au	silver-alloy + 3 µm Au
Ex-approval acc. to certificate of conformity	PTB 00 ATEX 2033	PTB 00 ATEX 2033
Maximum nominal values		
– No load voltage U_0	≤ 9.6 V	≤ 9.6 V
– Short-circuit current I_0 , SI_0	≤ 10.7 mA, ≤ 21.4 mA	≤ 10.7 mA, ≤ 21.4 mA
Maximum external inductances/capacitances		
– [EEx ia] IIC	3.6 µF/300 mH	3.6 µF/300 mH
– [EEx ib] IIC	26 µF/1000 mH	26 µF/1000 mH
Marking of devices	II (1) GD [EEx ia] IIC	II (1) GD [EEx ia] IIC
LED indications		
– Power	green	green
– Switching status/fault indication	1 x yellow/red (dual colour LED)	1 x yellow/red (dual colour LED)
Housing	12-pole, 18 mm wide, Polycarbonate/ABS, flammability class V-0 per UL 94	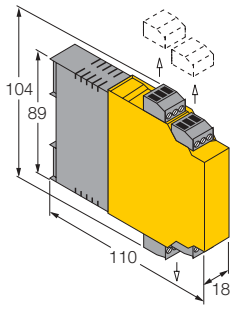
Mounting	snap-on clamps for top-hat rail (DIN 50022) or screw terminals for panel mounting	
Connection	removable terminal blocks, reverse-polarity protected, screw connection, self-lifting	
Connection profile	≤ 1 x 2.5 mm^2, 2 x 1.5 mm^2 or 2 x 1.0 mm^2 with wire sleeves	
Degree of protection (IEC 60529/EN 60529)	IP20	
Operating temperature	-25…+60 °C	

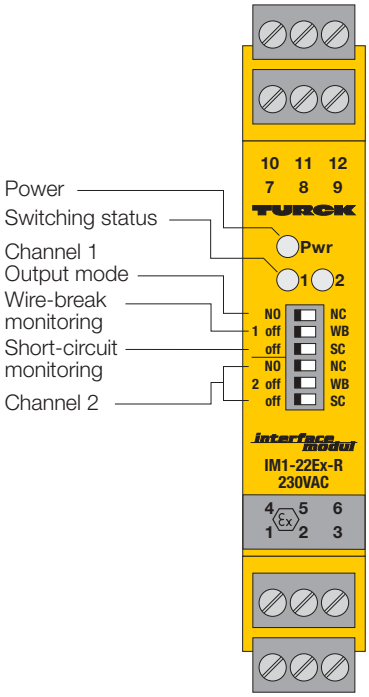

Isolating Switching Amplifier IM1-22Ex-R/24VDC IM1-22Ex-R/230VAC 2-channel

1

- **2-channel isolating switching amplifier with removable terminal blocks**
- **Intrinsically safe input circuits EEx ia**
- **Area of application according to ATEX: II (1) GD**
- **Galvanic isolation between input circuits, output circuits and supply voltage**
- **Input circuit monitoring for wire-break and short-circuit (can be disabled)**
- **2 relay outputs, each with one NO contact**
- **Selectable NO/NC output function**

The isolating switching amplifiers type IM1-22Ex0-R are dual channel devices featuring intrinsically safe input circuits. They can be connected to sensors according to EN 60947-5-6 (NAMUR), variable resistors or potential-free contacts. The output circuits each feature one relay with one NO contact each.

Six front panel programming switches select the output function of each channel (normally open mode = NO/or normally closed mode = NC) and enable separate activation and de-activation of wire-break (WB) and short-circuit (SC) monitoring of each channel.

When using mechanical contacts as the input device, wire-break and short-circuit monitoring must be disabled or shunt resistors must be connected to the contacts (II). (See next page for contact configuration).

The green LED on the front cover indicates that the device is powered. The two dual colour LEDs indicate the switching status (yellow) as well as fault conditions (red). When the input circuit monitoring feature is activated, red illuminates to indicate a fault in the input circuit and the respective output relay is de-energised.

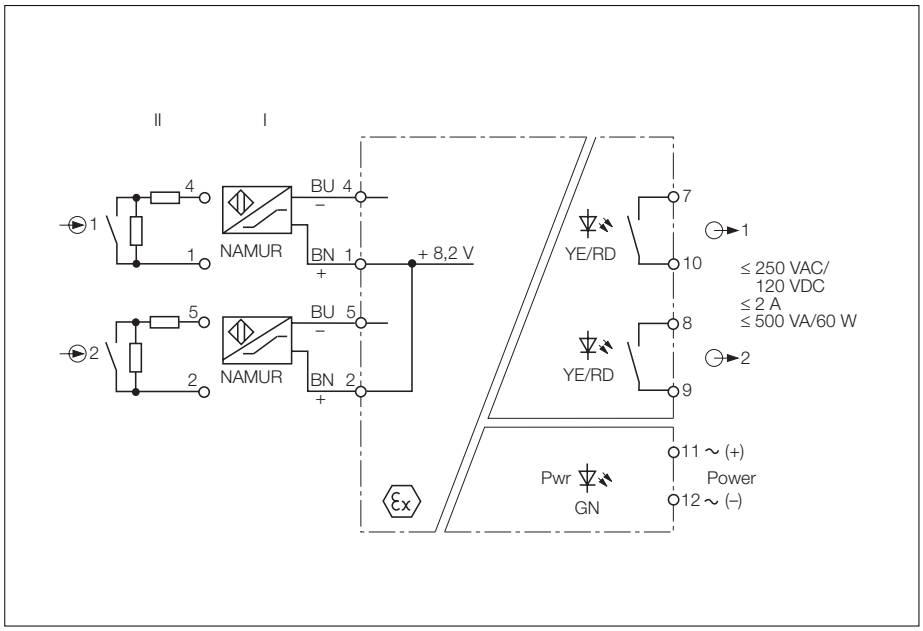

Isolating Switching Amplifier IM1-22Ex-R

Type	IM1-22Ex0-R/230VAC	IM1-22Ex0-R/24VDC
Ident-no.	7541211	7541210
Supply voltage U_B	196...253 VAC	10...30 VDC
Line frequency/ripple W_{PP}	48...62 Hz	≤ 10 %
Power/current consumption	≤ 30 mA_{rms}	≤ 1.5 W
Galvanic isolation	between input circuit, output circuit and supply voltage for 250 V_{rms}, test voltage 2.5 kV_{rms}	between input circuit, output circuit and supply voltage for 250 V_{rms}, test voltage 2.5 kV_{rms}
Input circuits	according to EN 60947-5-6 (NAMUR), intrinsically safe according to EN 50020	according to EN 60947-5-6 (NAMUR), intrinsically safe according to EN 50020
Operating characteristics		
– Voltage	8.2 V	8.2 V
– Current	8.2 mA	8.2 mA
Switching threshold	1.55 mA	1.55 mA
Hysteresis	typ. 0.2 mA	typ. 0.2 mA
Wire-break threshold	≤ 0.1 mA	≤ 0.1 mA
Short-circuit threshold	≥ 6.0 mA	≥ 6.0 mA
Contact configuration Of mechanical switches with active input circuit monitoring function	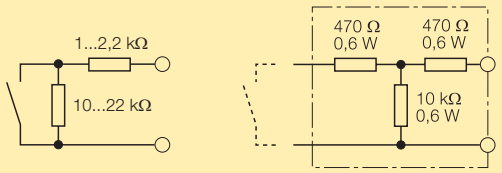	resistor module WM1, ident-no. 0912101
Output circuits	2 relay outputs with 1 NO contact each	2 relay outputs with 1 NO contact each
Switching voltage	≤ 250 VAC/120 VDC	≤ 250 VAC/120 VDC
Switching current per output	≤ 2 A	≤ 2 A
Switching capacity per output	≤ 500 VA/60 W	≤ 500 VA/60 W
Switching frequency	≤ 10 Hz	≤ 10 Hz
Contact material	silver-alloy + 3 µm Au	silver-alloy + 3 µm Au
Ex-approval acc. to certificate of conformity	PTB 00 ATEX 2033	PTB 00 ATEX 2033
Maximum nominal values		
– No load voltage U_0	≤ 9,6 V	≤ 9,6 V
– Short-circuit current I_k	≤ 21,4 mA	≤ 21,4 mA
Max. external inductances/capacitances L_0/C_0		
– [EEx ia] IIC	3,6 µF/300 mH	3,6 µF/300 mH
– [EEx ib] IIC	26 µF/1000 mH	26 µF/1000 mH
Marking of devices	II (1) GD [EEx ia] IIC	II (1) GD [EEx ia] IIC
LED indications		
– Power	green	green
– Switching status/fault indication	2 x yellow/red (2-colour LED)	2 x yellow/red (2-colour LED)
Housing	12-pole, 18 mm wide, Polycarbonate/ABS, flammability class V-0 per UL 94	
Mounting	snap-on clamps for top-hat rail (DIN 50022) or screw terminals for panel mounting	
Connection	removable terminal blocks, reverse-polarity protected, screw connection, self-lifting	
Connection profile	≤ 1 x 2.5 mm^2 or 2 x 1.5 mm^2 with wire sleeves	
Degree of protection (IEC 60529/EN 60529)	IP20	
Operating temperature	-25…+60 °C	

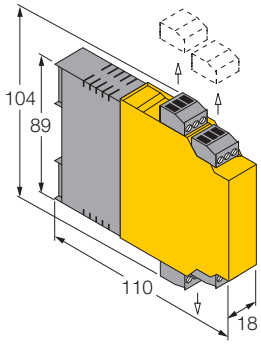

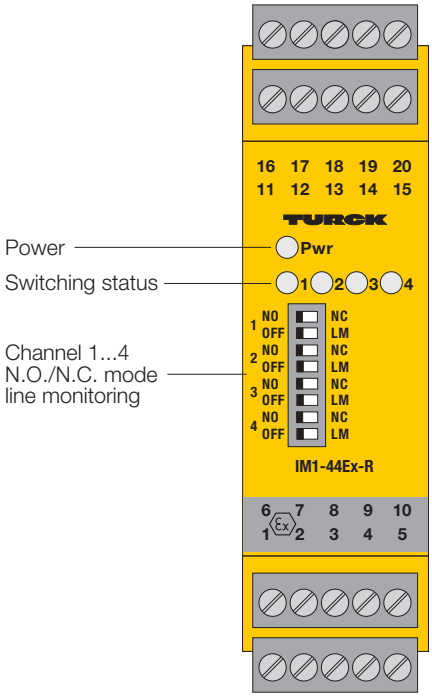

Isolating Switching Amplifier IM1-44Ex-R 4-channel

- **4-channel isolating switching amplifier with removable terminal blocks**
- **Intrinsically safe input circuits**
- **Input circuit monitoring for wire-break and short-circuit (can be disabled)**
- **Galvanic isolation between input circuits, output circuits and supply voltage**
- **4 relay outputs, each with one NO contact**
- **Selectable NO/NC output function**
- **Universal supply voltage (20...250 VAC/20...125 VDC)**

The isolating switching amplifiers type IM1-44Ex-R are four channel devices featuring intrinsically safe input circuits. They can be connected to sensors according to EN 60947-5-6 (NAMUR), variable resistors or potential-free contacts. The output circuits each feature one relay with one NO contact each.

Eight front panel programming switches select the output function of each channel (normally open mode = NO/or normally closed mode = NC) and enable separate activation and de-activation of cable monitoring of each channel.

When using mechanical contacts as the input device, wire-break and short-circuit monitoring must be disabled or shunt resistors must be connected to the contacts (II). (See next page for contact configuration).

The green LED on the front cover indicates that the device is powered. The four dual colour LEDs indicate the switching status (yellow) as well as fault conditions (red). When the input circuit monitoring feature is activated, red illuminates to indicate a fault in the input circuit and the respective output relay is disabled.

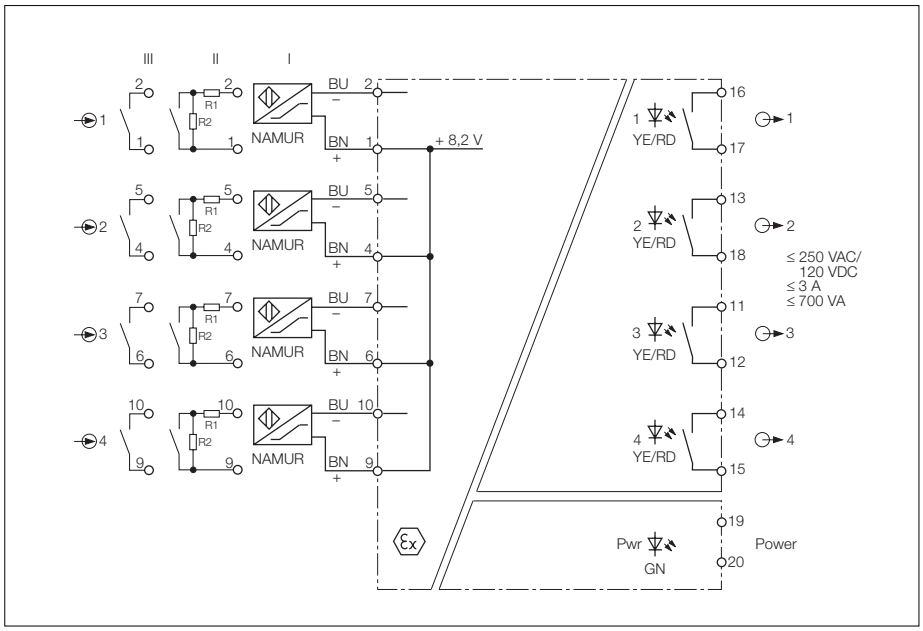

Isolating Switching Amplifier IM1-44Ex-R

Type	IM1-44Ex-R
Ident-No.	7541220
Supply voltage U_B	20...250 VAC/120...125 VDC
Line frequency (AC)	40...70 Hz
Power/current consumption	≤ 3 W
Galvanic isolation	between input circuit, output circuit and supply voltage for 250 V_{rms}, test voltage 2.5 kV_{rms}
Input circuits	according to EN 60947-5-6 (NAMUR), intrinsically safe according to EN 50020
Operating characteristics	
– Voltage	8.2 V
– Current	8.2 mA
Switching threshold	1.55 mA
Hysteresis	typ. 0.2 mA
Wire-break threshold	≤ 0.1 mA
Short-circuit threshold	≥ 6.0 mA
Contact configuration	
Of mechanical switches with active input circuit monitoring function	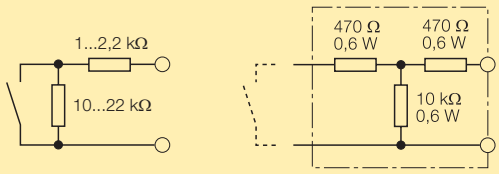 resistor module WM1, ident-no. 0912101
Output circuits	4 relay outputs (NO contact)
Switching voltage	≤ 250 VAC/120 VDC
Switching current per output	≤ 3 A
Switching capacity per output	≤ 750 VA
Switching frequency	≤ 10 Hz
Contact material	silver-alloy + 3 µm Au
Ex-approval acc. to certificate of conformity	pending
Maximum nominal values	
– No load voltage U_0	–
– Short-circuit current I_0	–
Max. external inductances/capacitances L_0/C_0	
– [EEx ia/ib] IIC	–
– [EEx ia/ib] IIB	–
Marking of devices	–
LED indications	
– Power	green
– Switching status/fault indication	4 x yellow/red (2-colour LED)
Housing	20-pole, 27 mm wide, Polycarbonate/ABS flammability class V-0 per UL 94
Mounting	snap-on clamps for top-hat rail (DIN 50022) or screw terminals for panel mounting
Connection	removable terminal blocks, reverse-polarity protected, screw connection, self-lifting
Connection profile	≤ 1 x 2.5 mm^2, 2 x 1.5 mm^2 or 2 x 1.0 mm^2 with wire sleeves
Degree of protection (IEC 60529/EN 60529)	IP20
Operating temperature	-25…+70 °C

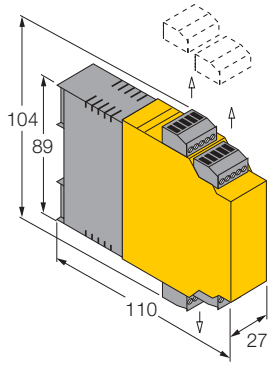

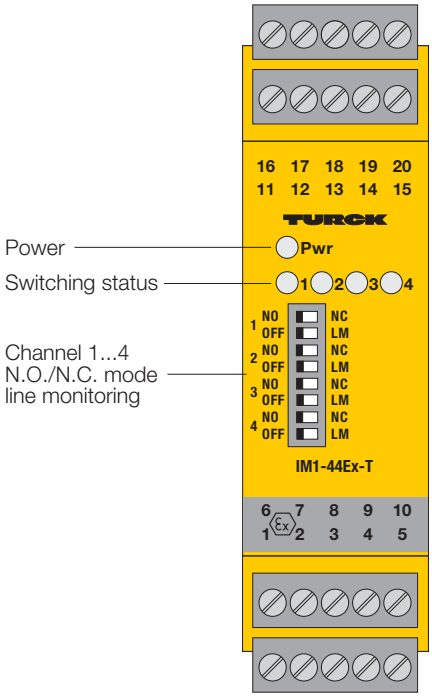

Isolating Switching Amplifier IM1-44Ex-T 4-channel

- **4-channel isolating switching amplifier with removable terminal blocks**
- **Intrinsically safe input circuits**
- **Input circuit monitoring for wire-break and short-circuit (can be disabled)**
- **Galvanic isolation between input circuits, output circuits and supply voltage**
- **4 transistor outputs, short-circuit and reverse polarity protected**
- **Selectable NO/NC output function**
- **Universal supply voltage (20...250 VAC/20...125 VDC)**

The isolating switching amplifiers type IM1-44Ex-T are four channel devices featuring intrinsically safe input circuits. They can be connected to sensors according to EN 60947-5-6 (NAMUR), variable resistors or potential-free contacts. The output circuits each feature a potential free, short-circuit and reverse polarity protected transistor output.

Eight front panel programming switches select the output function of each channel (normally open mode = NO/or normally closed mode = NC) and enable separate activation and de-activation of cable monitoring of each channel.

When using mechanical contacts as the input device, wire-break and short-circuit monitoring must be disabled or shunt resistors must be connected to the contacts (II). (See next page for contact configuration).

The green LED on the front cover indicates that the device is powered. The four dual colour LEDs indicate the switching status (yellow) as well as fault conditions (red). When the input circuit monitoring feature is activated, red illuminates to indicate a fault in the input circuit and the respective transistor output is disabled.

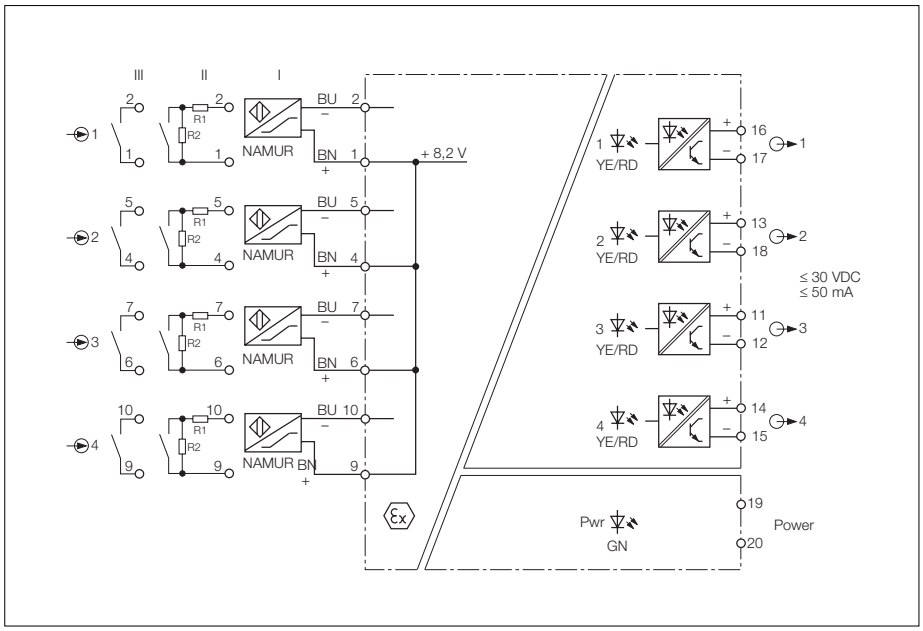

Isolating Switching Amplifier IM1-44Ex-T

Type	IM1-44Ex-T
Ident-No.	7541221
Supply voltage U_B	20...250 VAC/120...125 VDC
Line frequency (AC)	40...70 Hz
Power/current consumption	≤ 3 W
Galvanic isolation	between input circuit, output circuit and supply voltage for 250 V_{rms}, test voltage 2.5 kV_{rms}
Input circuits	according to EN 60947-5-6 (NAMUR), intrinsically safe according to EN 50020
Operating characteristics	
– Voltage	8.2 V
– Current	8.2 mA
Switching threshold	1.55 mA
Hysteresis	typ. 0.2 mA
Wire-break threshold	≤ 0.1 mA
Short-circuit threshold	≥ 6.0 mA
Contact configuration Of mechanical switches with active input circuit monitoring function	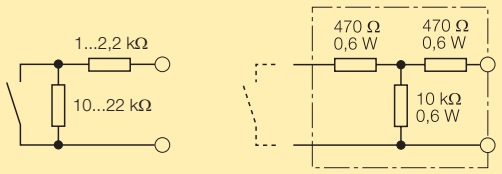 resistor module WM1, ident-no. 0912101
Output circuits	4 transistor outputs, potential free, short-circuit protected
Switching voltage	≤ 30 VDC
Switching current per output	≤ 50 mA
Switching frequency	≤ 3 kHz
Voltage drop	≤ 2.5 V
Ex-approval acc. to certificate of conformity	pending
Maximum nominal values	
– No load voltage U_0	–
– Short-circuit current I_0	–
Max. external inductances/capacitances L_0/C_0	
– [EEx ia/ib] IIC	–
– [EEx ia/ib] IIB	–
Marking of devices	–
LED indications	
– Power	green
– Switching status/fault indication	4 x yellow/red (2-colour LED)
Housing	20-pole, 27 mm wide, Polycarbonate/ABS flammability class V-0 per UL 94
Mounting	snap-on clamps for top-hat rail (DIN 50022) or screw terminals for panel mounting
Connection	removable terminal blocks, reverse-polarity protected, screw connection, self-lifting
Connection profile	≤ 1 x 2.5 mm², 2 x 1.5 mm² or 2 x 1.0 mm² with wire sleeves
Degree of protection (IEC 60529/EN 60529)	IP20
Operating temperature	-25…+70 °C

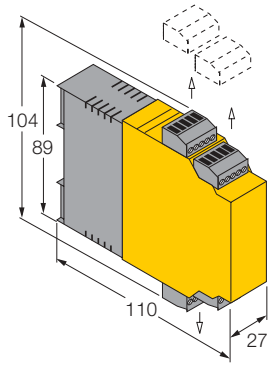

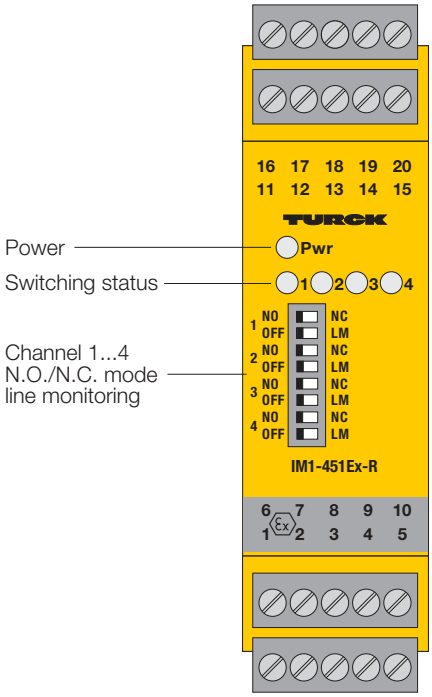

Isolating Switching Amplifier IM1-451Ex-R 4-channel

- **4-channel isolating switching amplifier with removable terminal blocks**
- **Common alarm output**
- **Intrinsically safe input circuits**
- **Input circuit monitoring for wire-break and short-circuit (can be disabled)**
- **Galvanic isolation between input circuits, output circuits and supply voltage**
- **5 relay outputs, each with a NO contact**
- **Selectable NO/NC output function**
- **Universal supply voltage (20...250 VAC/20...125 VDC)**

The isolating switching amplifiers type IM1-451Ex-R are four channel devices featuring intrinsically safe input circuits. They can be connected to sensors according to EN 60947-5-6 (NAMUR), variable resistors or potential-free contacts. The output circuits each feature a relay with a NO contact. The device also features a common alarm output.

Eight front panel programming switches select the output function of each channel (normally open mode = NO/or normally closed mode = NC) and enable separate activation and de-activation of input circuit monitoring.

When using mechanical contacts as the input device, input circuit monitoring must be disabled or shunt resistors must be connected to the contacts (II). (See next page for contact configuration).

The green LED on the front cover indicates that the device is powered. The four dual colour LEDs indicate the switching status (yellow) as well as fault conditions (red). When the input circuit monitoring feature is activated, red illuminates to indicate a fault in the input circuit and the respective output relay and common fault relay are de-energised.

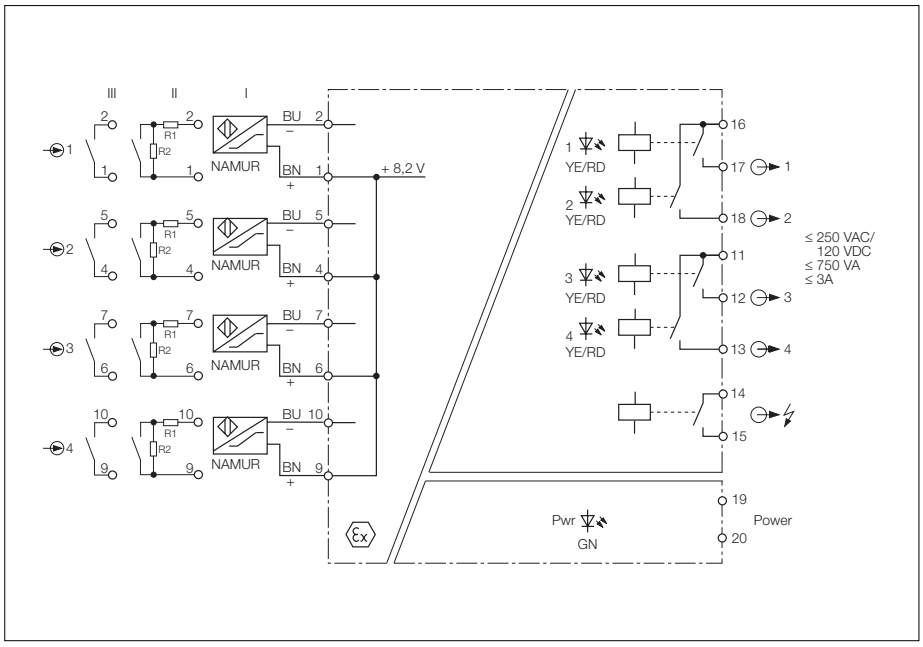

Isolating Switching Amplifier IM1-451Ex-R

Type	IM-451Ex-R
Ident-No.	7541188
Supply voltage U_B	20...250 VAC/120...125 VDC
Line frequency (AC)	40...70 Hz
Power/current consumption	≤ 3 W
Galvanic isolation	between input circuit, output circuit and supply voltage for 250 V_{rms}, test voltage 2.5 kV_{rms}
Input circuits	according to EN 60947-5-6 (NAMUR), intrinsically safe according to EN 50020
Operating characteristics	
– Voltage	8.2 V
– Current	8.2 mA
Switching threshold	1.55 mA
Hysteresis	typ. 0.2 mA
Wire-break threshold	≤ 0.1 mA
Short-circuit threshold	≥ 6.0 mA
Contact configuration Of mechanical switches with active input circuit monitoring function	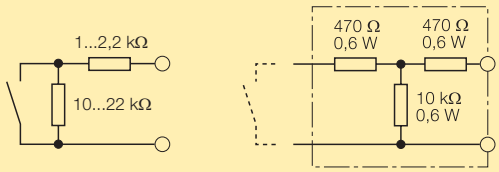 resistor module WM1, ident-no. 0912101
Output circuits	5 relay outputs (NO contact)
Switching voltage	≤ 250 VAC/120 VDC
Switching current per output	≤ 3 A
Switching capacity per output	≤ 750 VA
Switching frequency	≤ 10 Hz
Contact material	silver-alloy + 3 µm Au
Ex-approval acc. to certificate of conformity	pending
Maximum nominal values	
– No load voltage U_0	–
– Short-circuit current I_0	–
Max. external inductances/capacitances L_0/C_0	
– [EEx ia/ib] IIC	–
– [EEx ia/ib] IIB	–
Marking of devices	–
LED indications	
– Power	green
– Switching status/fault indication	4 x yellow/red (2-colour LED)
Housing	20-pole, 27 mm wide, Polycarbonate/ABS flammability class V-0 per UL 94
Mounting	snap-on clamps for top-hat rail (DIN 50022) or screw terminals for panel mounting
Connection	removable terminal blocks, reverse-polarity protected, screw connection, self-lifting
Connection profile	≤ 1 x 2.5 mm^2, 2 x 1.5 mm^2 or 2 x 1.0 mm^2 with wire sleeves
Degree of protection (IEC 60529/EN 60529)	IP20
Operating temperature	-25…+70 °C

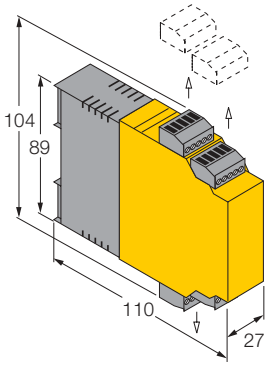

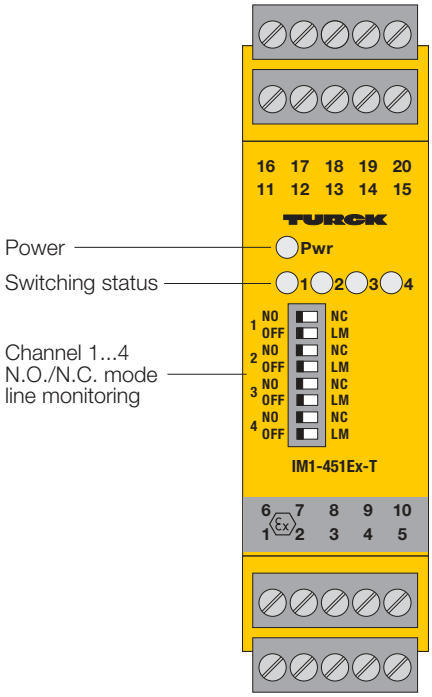

Isolating Switching Amplifier IM1-451Ex-T 4-channel

1

- **4-channel isolating switching amplifier with removable terminal blocks**
- **Common alarm output**
- **Intrinsically safe input circuits**
- **Input circuit monitoring for wire-break and short-circuit (can be disabled)**
- **Galvanic isolation between input circuits, output circuits and supply voltage**
- **5 transistor outputs, short-circuit and reverse polarity protected**
- **Selectable NO/NC output function**
- **Universal supply voltage (20...250 VAC/20...125 VDC)**

The isolating switching amplifiers type IM1-451Ex-T are four channel devices featuring intrinsically safe input circuits. They can be connected to sensors according to EN 60947-5-6 (NAMUR), variable resistors or potential-free contacts.

The output circuits each feature a potential-free, short-circuit and reverse polarity protected transistor output. A positive voltage can be applied to the outputs via their common connection. The device also features a common alarm output.

Eight front panel programming switches select the output function of each channel (normally open mode = NO/or normally closed mode = NC) and enable separate activation and de-activation of input circuit monitoring.
When using mechanical contacts as the input device, input circuit monitoring must be disabled or shunt resistors must be connected to the contacts (II). (See next page for contact configuration).

The green LED on the front cover indicates that the device is powered. The four dual colour LEDs indicate the switching status (yellow) as well as fault conditions (red). When the input circuit monitoring feature is activated, red illuminates to indicate a fault in the input circuit and the respective transistor output and common fault output are disabled.

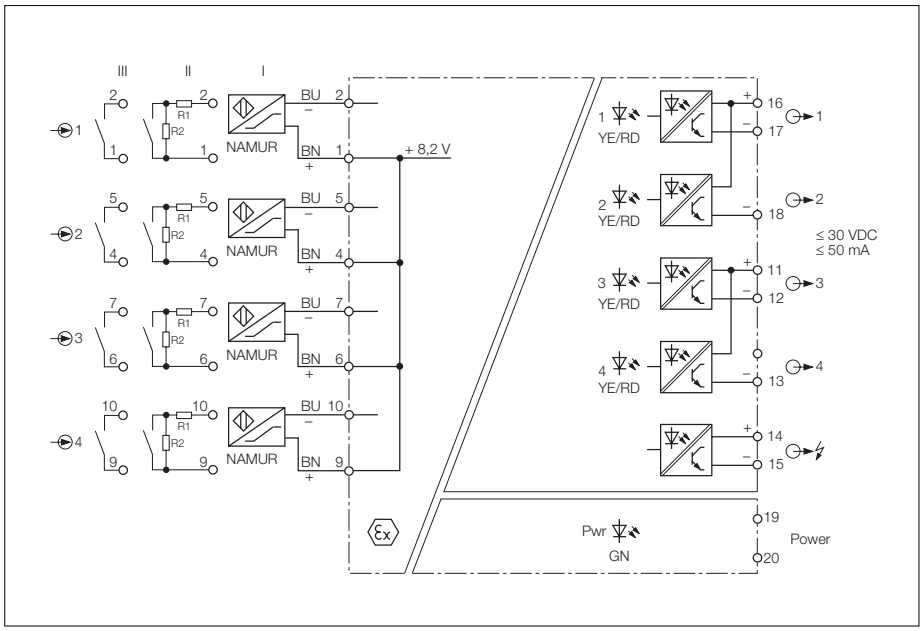

Isolating Switching Amplifier IM1-451Ex-T

Type	IM1-451Ex-T
Ident-No.	7541189
Supply voltage U_B	20...250 VAC/20...125 VDC
Line frequency (AC)	40...70 Hz
Power/current consumption	≤ 3 W
Galvanic isolation	between input circuit, output circuit and supply voltage for 250 V_{rms}, test voltage 2.5 kV_{rms}
Input circuits	according to EN 60947-5-6 (NAMUR), intrinsically safe according to EN 50020
Operating characteristics	
– Voltage	8.2 V
– Current	8.2 mA
Switching threshold	1.55 mA
Hysteresis	typ. 0.2 mA
Wire-break threshold	≤ 0.1 mA
Short-circuit threshold	≥ 6.0 mA
Contact configuration Of mechanical switches with active nput circuit monitoring function	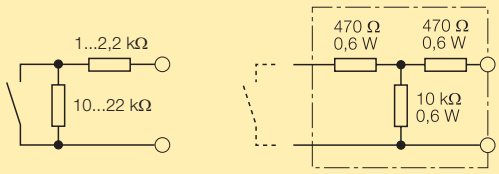 resistor module WM1, ident-no. 0912101
Output circuits	4 transistor outputs, potential free, short-circuit protected
Switching voltage	≤ 30 VDC
Switching current per output	≤ 50 mA
Switching frequency	≤ 3 kHz
Voltage drop	≤ 2.5 V
Ex-approval acc. to certificate of conformity	pending
Maximum nominal values	
– No load voltage U_0	–
– Short-circuit current I_0	–
Max. external inductances/capacitances L_0/C_0	
– [EEx ia/ib] IIC	–
– [EEx ia/ib] IIB	–
Marking of devices	–
LED indications	
– Power	green
– Switching status/fault indication	4 x yellow/red (2-colour LED)
Housing	20-pole, 27 mm wide, Polycarbonate/ABS flammability class V-0 per UL 94
Mounting	snap-on clamps for top-hat rail (DIN 50022) or screw terminals for panel mounting
Connection	removable terminal blocks, reverse-polarity protected, screw connection, self-lifting
Connection profile	≤ 1 x 2.5 mm², 2 x 1.5 mm² or 2 x 1.0 mm² with wire sleeves
Degree of protection (IEC 60529/EN 60529)	IP20
Operating temperature	-25…+70 °C

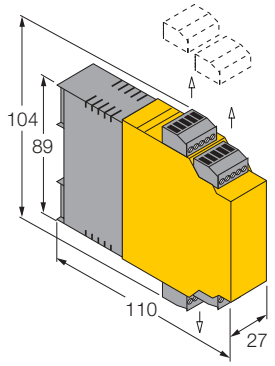

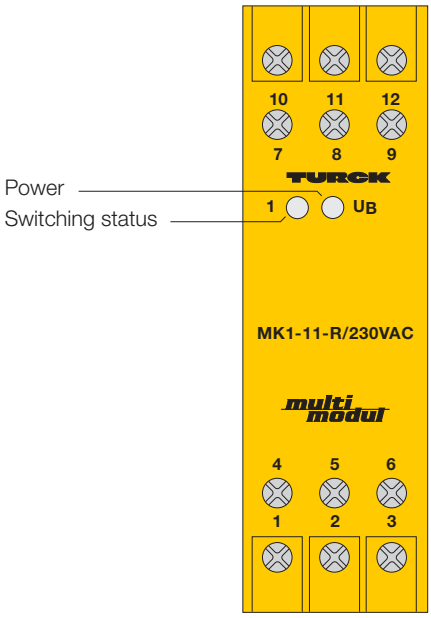

Switching Amplifier MK1-11-R/230VAC MK1-11-R/24VUC 1-channel

1

- **1-channel switching amplifier**
- **Input circuit according to EN 60947-5-6 (NAMUR)**
- **Galvanic isolation between input circuit, output circuit and supply voltage**
- **The 230 VAC device provides additional galvanic isolation from supply voltage**
- **Relay output with one SPDT contact**
- **Selectable NO/NC output function**

The switching amplifiers type MK1-11-R are single channel devices with an input circuit according to EN 60947-5-6 (NAMUR). They can be used in conjunction with sensors conforming to EN 60947-5-6 (NAMUR), variable resistors or potential-free contacts. The device is provided with a relay output with one SPDT contact.

Connecting the sensor according to possibility (I) of the block diagram, selects the normally open (NO) output function. If connected according to possibility (II), the normally closed (NC) output function is selected.

A green LED on the front cover indicates that the device is powered. The yellow LED indicates the switching status.

Terminals 3 and 6 provide a voltage of 8 V for a max. load of 75 mA.

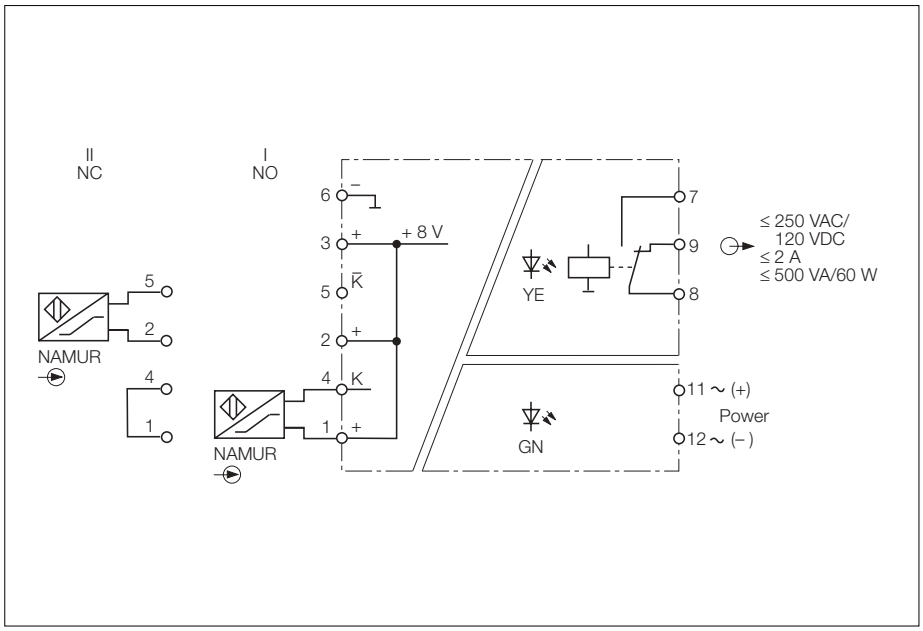

Switching Amplifier MK1-11-R

Type	MK1-11-R/230VAC	MK1-11-R/24VUC
Ident-no.	7540000	7540007
Supply voltage U_B	196...253 VAC	19...29 VUC
Line frequency/ripple W_{PP}	48...62 Hz	48...62 Hz
Power/current consumption	≤ 3 VA	≤ 2 VA
Galvanic isolation	between input circuit, output circuit and supply voltage for 250 V_{rms}, test voltage 4 kV_{rms}	between input circuit and output circuit and supply voltage for 250 $V_{rms,}$ test voltage 4 kV_{rms}
Input circuits	according to EN 60947-5-6 (NAMUR)	according to EN 60947-5-6 (NAMUR)
Operating characteristics		
– Voltage	8 V	8 V
– Current	8 mA	8 mA
Switching threshold	1.55 mA	1.55 mA
Hysteresis	typ. 0.2 mA	typ. 0.2 mA
Output circuits	1 relay output (SPDT)	1 relay output (SPDT)
Switching voltage	≤ 250 VAC/120 VDC	≤ 250 VAC/120 VDC
Switching current per output	≤ 2 A	≤ 2 A
Switching capacity per output	≤ 500 VA/60 W	≤ 500 VA/60 W
Switching frequency	≤ 10 Hz	≤ 10 Hz
Contact material	silver-alloy + 3 µm Au	silver-alloy + 3 µm Au
LED indications		
– Power	green	green
– Switching status	yellow	yellow
Housing	12-pole, 27 mm wide, Polycarbonate/ABS, flammability class V-0 per UL 94	
Mounting	snap-on clamps for top-hat rail (DIN 50022) or screw terminals for panel mounting	
Connection	via flat terminals with self-lifting pressure plates	
Connection profile	≤ 2 x 2.5 mm^2 or 2 x 1.5 mm^2 with wire sleeves	
Degree of protection (IEC 60529/EN 60529)	IP20	
Operating temperature	-25…+60 °C	

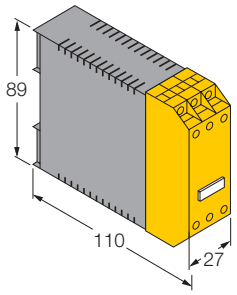

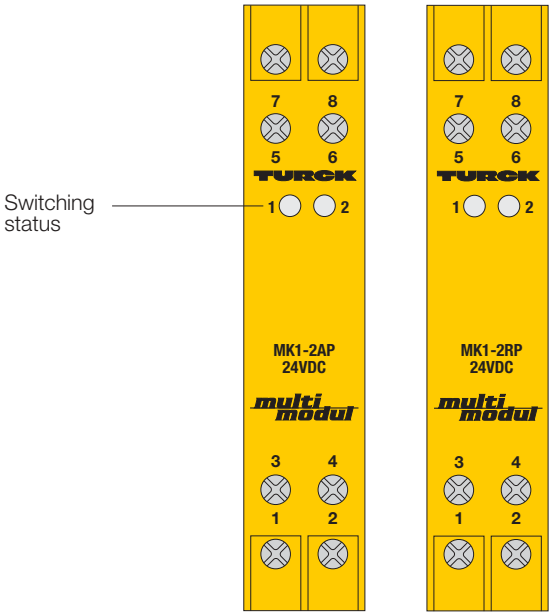

Switching Amplifier MK1-2AP/24VDC MK1-2RP/24VDC 2-channel

1

- **2-channel switching amplifier**
- **Input circuits according to EN 60947-5-6 (NAMUR)**
- **2 transistor outputs, pnp, short-circuit protected:**
  - **normally open (NO) mode (MK1-2AP/24 VDC)**
  - **normally closed (NC) mode (MK1-2RP/24 VDC)**
- **Terminal housing, 18 mm wide, with snap-on clamps for top-hat rail (DIN 50022) or screw terminals for panel mounting**

The MK1-2AP and MK1-2RP are dual channel switching amplifiers with input circuits according to EN 60947-5-6 (NAMUR). They can be used with sensors conforming to EN 60947-5-6 or potential-free contacts.

The couplers provide two pnp, short-circuit protected transistor outputs per channel. The input circuits are not self-monitored.

The output mode is explained in the function truth table on the bottom.

The switching state of the respective output is indicated via yellow LED's.

MK1-2AP/24VDC

input		output
inductive sensors acc. to EN 60947-5-6 (NAMUR)	mechanical contact	
		off
		on

MK1-2RP/24VDC

input		output
inductive sensors acc. to EN 60947-5-6 (NAMUR)	mechanical contact	
		on
		off

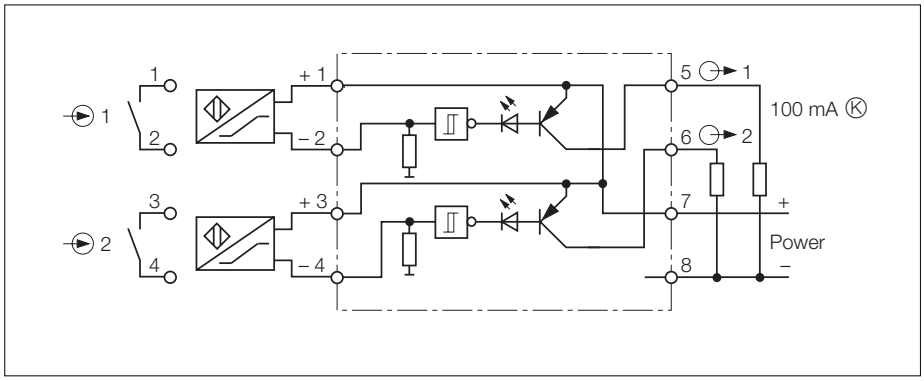

Switching Amplifier MK1-2AP/MK1-2RP

Type	MK1-2AP/24VDC	MK1-2RP/24VDC
Ident-no.	7505500	7505501
Supply voltage U_B	19...29 VDC	19...29 VDC
Ripple W_{PP}	≤ 10 %	≤ 10 %
Current consumption	≤ 20 mA	≤ 20 mA
Input circuits	according to EN 60947-5-6 (NAMUR)	according to EN 60947-5-6 (NAMUR)
Operating characteristics		
– Voltage	8 V	8 V
– Current	5 mA	5 mA
Switching threshold	1.55 mA	1.55 mA
Hysteresis	0.2 mA	0.2 mA
Output circuits	2 pnp transistor outputs	2 pnp transistor outputs
Voltage drop	≤ 2.5 V	≤ 2.5 V
Switching current per output	≤ 100 mA, short-circuit protected	≤ 100 mA, short-circuit protected
Switching frequency	≤ 1 kHz	≤ 1 kHz
LED indications		
Switching status	2 x yellow	2 x yellow
Housing	8-pole, 18 mm wide, Polycarbonate/ABS, flammability class V-0 per UL 94	
Mounting	snap-on clamps for top-hat rail (DIN 50022) or screw terminals for panel mounting	
Connection	via flat terminals with self-lifting pressure plates	
Connection profile	≤ 2 x 2.5 mm² or 2 x 1.5 mm² with wire sleeves	
Degree of protection (IEC 60529/EN 60529)	IP20	
Operating temperature	-25…+60 °C	

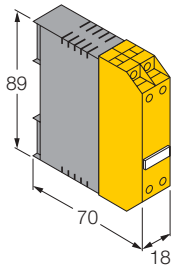

 Hans Turck GmbH & Co.KG • D–45466 Mülheim/Ruhr • Tel. 0208/4952-0 • Fax 0208/4952-264 • E-Mail: turckmh@mail.turck-globe.de • www.turck.com

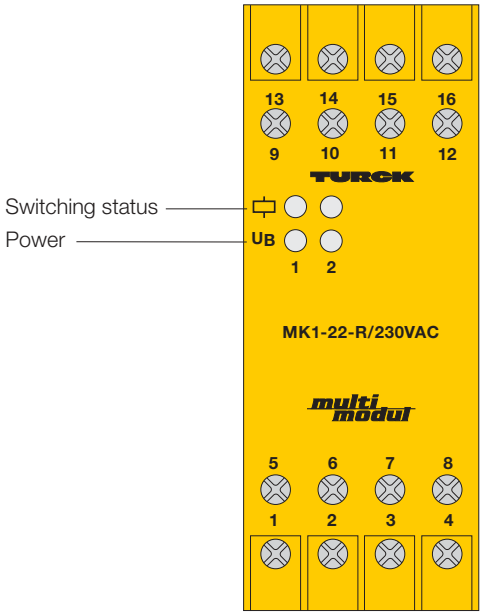

Switching Amplifier MK1-22-R/230VAC MK1-22-R/24VUC 2-channel

1

- **2-channel switching amplifier**
- **Input circuits according to EN 60947-5-6 (NAMUR)**
- **Galvanic isolation between input circuits, output circuits and supply voltage**
- **The 230 VAC device provides additional galvanic isolation from power supply**
- **2 relay outputs, each with one SPDT contact**
- **Selectable NO/NC output function**

The switching amplifiers type MK1-22-R are dual channel devices with input circuits according to EN 60947-5-6 (NAMUR). They can be used in conjunction with sensors conforming to EN 60947-5-6 (NAMUR), variable resistors or potential-free contacts. Each output circuit features a relay with SPDT contact.

Connecting the sensors according to possibility (I) of the block diagram, selects the normally open (NO) output mode. If connected according to possibility (II), the normally closed (NC) output function is selected.

The green LED on the front cover indicates that the devices are powered separately for each channel. The yellow LED indicates the output switching status.

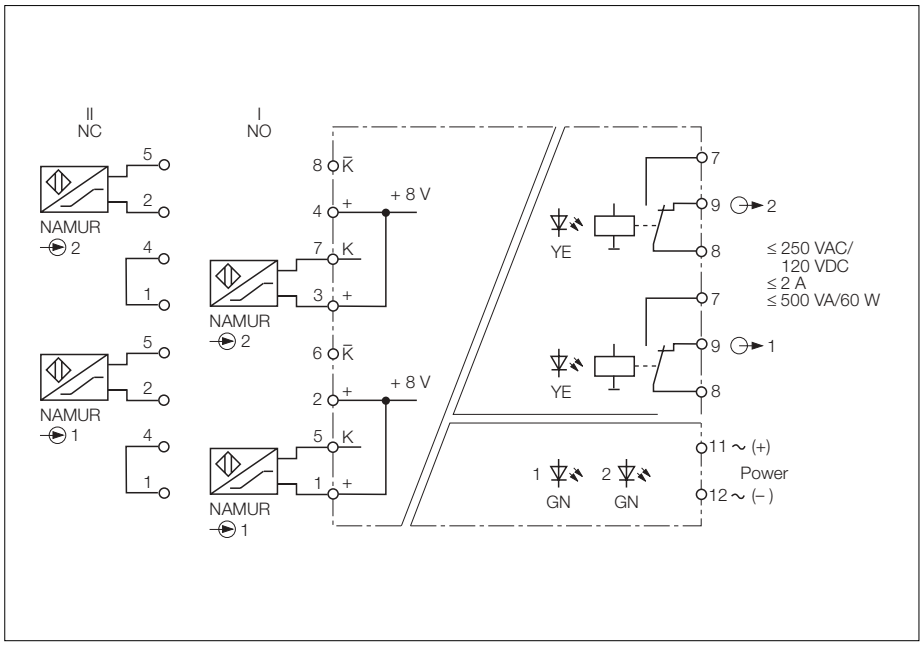

Switching Amplifier MK1-22-R

Type	MK1-22-R/230VAC	MK1-22-R/24VUC
Ident-no.	7540020	7540027
Supply voltage U_B	196...253 VAC	19...29 VUC
Line frequency/ripple W_{PP}	48...62 Hz	48...62 Hz
Power/current consumption	≤ 3 VA	≤ 2 VA
Galvanic isolation	between input circuit, output circuit and supply voltage for 250 V_{rms}, test voltage 4 kV_{rms}	between input circuit and output circuit and supply voltage for 250 V_{rms}, test voltage 4 kV_{rms}
Input circuits	according to EN 60947-5-6 (NAMUR)	according to EN 60947-5-6 (NAMUR)
Operating characteristics		
– Voltage	8.2 V	8.2 V
– Current	8.2 mA	8.2 mA
Switching threshold	1.55 mA	1.55 mA
Hysteresis	typ. 0.2 mA	typ. 0.2 mA
Output circuits	2 relay outputs (SPDT)	2 relay outputs (SPDT)
Switching voltage	≤ 250 VAC/120 VDC	≤ 250 VAC/120 VDC
Switching current per output	≤ 2 A	≤ 2 A
Switching capacity per output	≤ 500 VA/60 W	≤ 500 VA/60 W
Switching frequency	≤ 10 Hz	≤ 10 Hz
Contact material	silver-alloy + 3 µm Au	silver-alloy + 3 µm Au
LED indications		
– Power	green	green
– Switching status	yellow	yellow
Housing	16-pole, 36 mm wide, Polycarbonate/ABS, flammability class V-0 per UL 94	
Mounting	snap-on clamps for top-hat rail (DIN 50022) or screw terminals for panel mounting	
Connection	via flat terminals with self-lifting pressure plates	
Connection profile	≤ 2 x 2.5 mm^2 or 2 x 1.5 mm^2 with wire sleeves	
Degree of protection (IEC 60529/EN 60529)	IP20	
Operating temperature	-25…+60 °C	

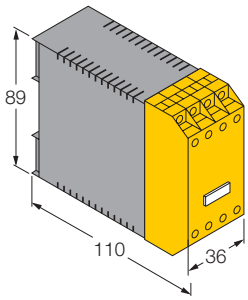

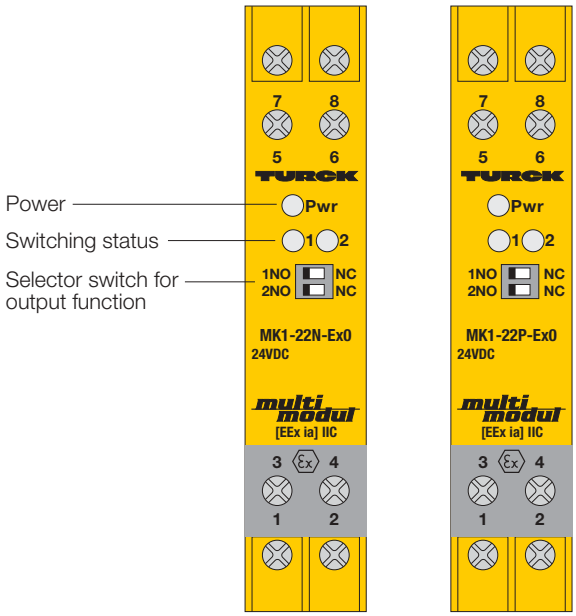

Isolating Switching Amplifier MK1-22P-Ex0/24VDC MK1-22N-Ex0/24VDC 2-channel

- **2-channel isolating switching amplifier**
- **Intrinsically safe input circuits EEx ia**
- **Area of application according to ATEX: II (1) GD**
- **Galvanic isolation between input circuits, output circuits and supply voltage**
- **2 short-circuit protected transistor outputs:**
  - **pnp (MK1-22P-Ex0)**
  - **npn (MK1-22N-Ex0)**
- **Selectable NO/NC output function**

The MK1-22N-Ex0 and MK1-22P-Ex0 are dual channel devices with intrinsically safe input circuits. They can be used in conjunction with sensors conforming to EN 60947-5-6 (NAMUR), variable resistors or potential-free contacts.

Each device is equipped with two short-circuit protected transistor outputs. There are pnp versions (MK1-22P Ex0) and npn versions (MK1-22N-Ex0) available.

Two front panel programming switches select the output function of each channel (normally open mode = NO/or normally closed mode = NC) and enable separate activation and de-activation of input circuit monitoring.

These units do not feature input circuit monitoring (wire-break and short-circuit). If input circuit monitoring is required, the switching amplifiers MK13-22N-Ex0 or MK13-22P-Ex0 should be used.

The green LED on the front cover indicates that the device is powered. The two yellow LEDs indicate the switching status.

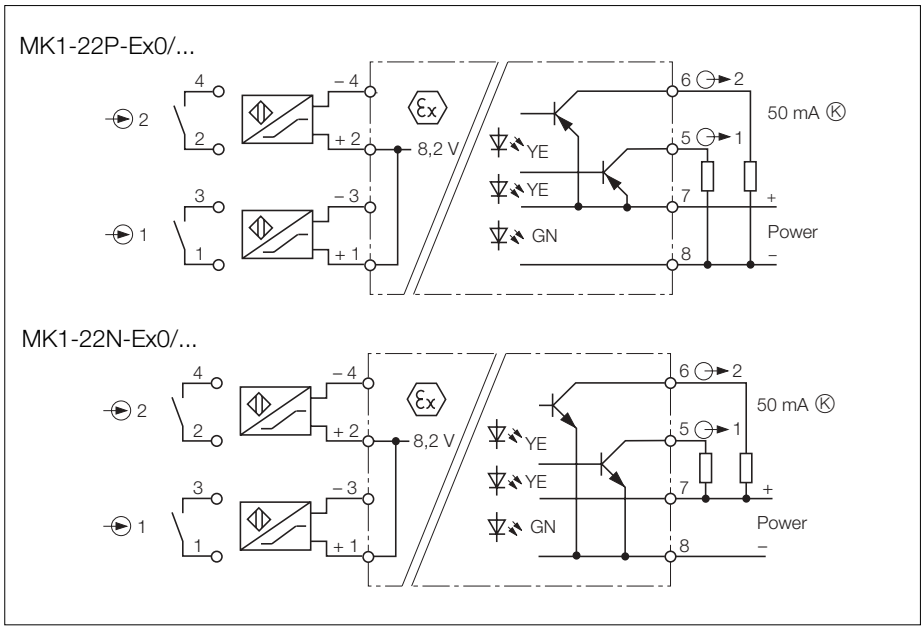

Isolating Switching Amplifier MK1-22P-Ex0/MK1-22N-Ex0

Type	MK1-22P-Ex0/24VDC	MK1-22N-Ex0/24VDC
Ident-no.	7505643	7505642
Supply voltage U_B	19...29 VDC	19...29 VDC
Ripple W_{PP}	≤ 10 %	≤ 10 %
Current consumption	approx. 50 mA	approx. 50 mA
Galvanic isolation	between input circuit, output circuit and supply voltage for 250 V_{rms}, test voltage 2.5 kV_{rms}	between input circuit, output circuit and supply voltage for 250 V_{rms}, test voltage 2.5 kV_{rms}
Input circuits	according to EN 60947-5-6 (NAMUR), intrinsically safe according to EN 50020	according to EN 60947-5-6 (NAMUR), intrinsically safe according to EN 50020
Operating characteristics		
– Voltage	8,2 V	8,2 V
– Current	8,2 mA	8,2 mA
Switching threshold	1.55 mA	1.55 mA
Hysteresis	typ. 0.2 mA	typ. 0.2 mA
Output circuits	2 pnp transistor outputs	2 npn transistor outputs
Voltage drop	≤ 1.7 V	≤ 1.7 V
Switching current per output	≤ 50 mA, short-circuit protected	≤ 50 mA, short-circuit protected
Switching frequency	≤ 3 kHz	≤ 3 kHz
Ex-approval acc. to certificate of conformity	TÜV 03 ATEX 2235	TÜV 03 ATEX 2235
Maximum nominal values		
– No load voltage U_0	≤ 9.9 V	≤ 9.9 V
– Short-circuit current I_0	≤ 12 mA	≤ 12 mA
– Power P_0	≤ 30 mW	≤ 30 mW
Max. external inductances/capacitances L_0/C_0		
– [EEx ia] IIC	2/10/20 mH/5/3.6/3.2 µF	1/5/10 mH/1.1/0.79/0.7 µF
– [EEx ib] IIC	1/5/10 mH/1.1/0.79/0.7 µF	1.7 µF/23 mH
Marking of device	II (1) GD [EEx ia] IIC	II (1) GD [EEx ia] IIC
LED indications		
– Power	green	green
– Switching status	yellow	yellow
Housing	8-pole, 18 mm wide, Polycarbonate/ABS, flammability class V-0 per UL 94	
Mounting	snap-on clamps for top-hat rail (DIN 50022) or screw terminals for panel mounting	
Connection	via flat terminals with self-lifting pressure plates	
Connection profile	≤ 2 x 2.5 mm^2 or 2 x 1.5 mm^2 with wire sleeves	
Degree of protection (IEC 60529/EN 60529)	IP20	
Operating temperature	-25…+70 °C	

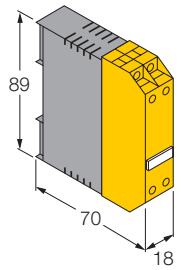

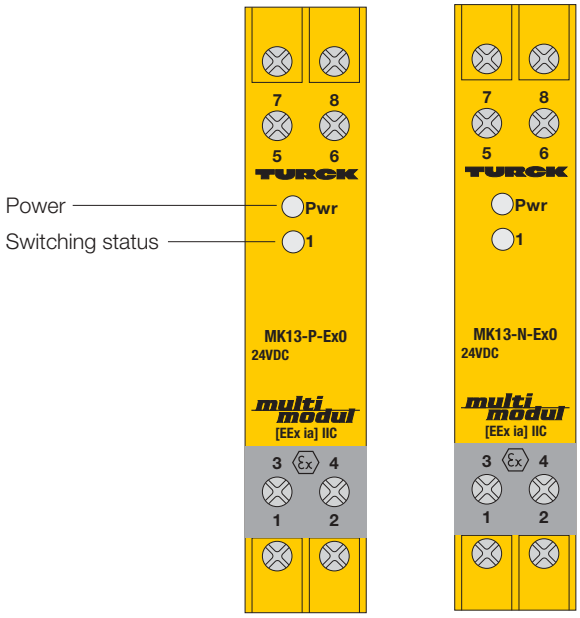

Isolating Switching Amplifier MK13-P-Ex0/24VDC MK13-N-Ex0/24VDC 1-channel

- **1-channel isolating switching amplifier**
- **Intrinsically safe input circuit EEx ia**
- **Area of application according to ATEX: II (1) GD**
- **Galvanic isolation between input circuit, output circuit and supply voltage**
- **Input circuit monitoring for wire-break and short-circuit (can be disabled)**
- **2 complementary short-circuit protected transistor outputs:**
  - **pnp (MK13-P-Ex0)**
  - **npn (MK13-N-Ex0)**

The MK13-P-Ex0 and the MK13-N-Ex0 are single channel devices with an intrinsically safe input circuit. They can be used in conjunction with sensors conforming to EN 60947-5-6 (NAMUR), variable resistors or potential-free contacts.

The devices have either two short-circuit protected pnp or npn transistor outputs with complementary function.

The input circuit is monitored for short-circuit and wire-break. The input circuit monitoring function can be disabled by jumpering terminals 3 and 4.

When using mechanical contacts as the input device, the input circuit monitoring function must be turned off, or shunt resistors must be connected to the contacts (II).

The dual colour LED indicates the switching status (yellow) of the output. With an input circuit fault, the input circuit changes – with activated input circuit monitoring – the colour of the dual colour LED to red. Then the outputs are disabled. An external exclusive OR circuit monitoring may be used to evaluate faults in the input circuit.

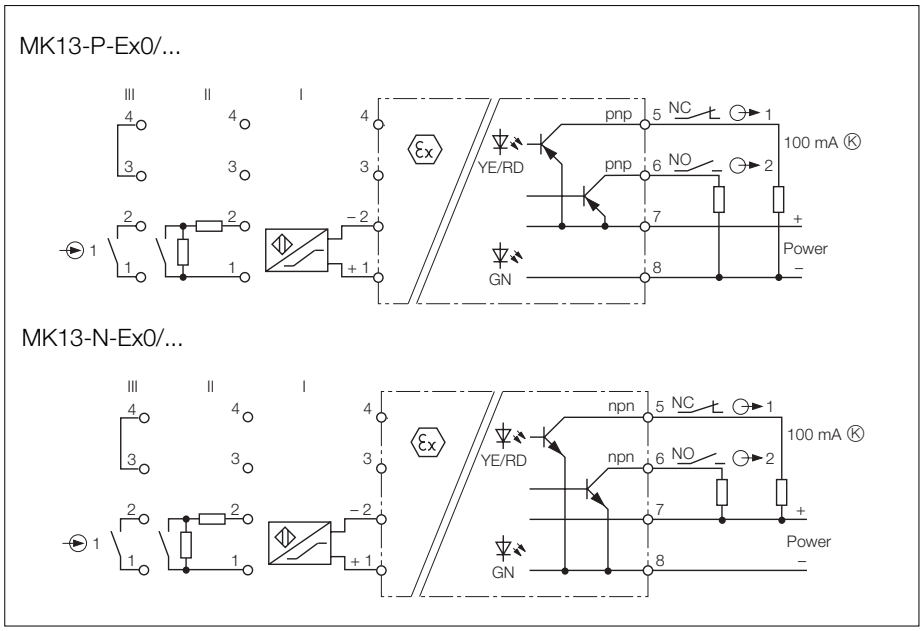

Isolating Switching Amplifier MK13-P-Ex0/MK13-N-Ex0

Type	MK13-P-Ex0/24VDC	MK13-N-Ex0/24VDC
Ident-no.	7542116	7542117
Supply voltage U_B	10...30 VDC	10...30 VDC
Ripple W_{PP}	≤ 10 %	≤ 10 %
Current consumption	approx. 20 mA	approx. 20 mA
Galvanic isolation	between input circuit, output circuit and supply voltage for 250 V_{rms}, test voltage 2.5 kV_{rms}	between input circuit, output circuit and supply voltage for 250 V_{rms}, test voltage 2.5 kV_{rms}
Input circuits	according to EN 60947-5-6 (NAMUR), intrinsically safe according to EN 50020	according to EN 60947-5-6 (NAMUR), intrinsically safe according to EN 50020
Operating characteristics		
– Voltage	8.2 V	8.2 V
– Current	8.2 mA	8.2 mA
Switching threshold	1.55 mA	1.55 mA
Hysteresis	typ. 0.4 mA	typ. 0.4 mA
Wire-break threshold	≤ 0.1 mA	≤ 0.1 mA
Short-circuit threshold	≥ 6 mA	≥ 6 mA
Contact configuration Of mechanical switches with active input circuit monitoring function	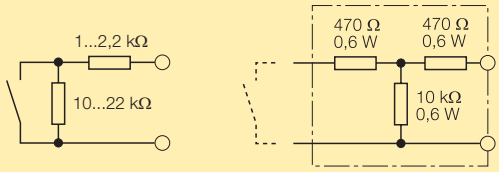	resistor module WM1, ident-no. 0912101
Output circuits	2 pnp transistor outputs	2 npn transistor outputs
Voltage drop	≤ 2.5 V	≤ 2.5 V
Switching current per output	≤ 100 mA, short-circuit protected	≤ 100 mA, short-circuit protected
Switching frequency	≤ 3 kHz	≤ 3 kHz
Ex-approval acc. to certificate of conformity	TÜV 03 ATEX 2235	TÜV 03 ATEX 2235
Maximum nominal values		
– No load voltage U_0	≤ 9.9 V	≤ 9.9 V
– Short-circuit current I_0	≤ 12 mA	≤ 12 mA
– Power P_0	≤ 30 mW	≤ 30 mW
Max. external inductances/capacitances L_0/C_0		
– [EEx ia] IIC	2/10/20 mH/5/3.6/3.2 µF	1/5/10 mH/1.1/0.79/0.7 µF
– [EEx ib] IIC	1/5/10 mH/1.1/0.79/0.7 µF	1.7 µF/23 mH
Marking of device	II (1) GD [EEx ia] IIC	II (1) GD [EEx ia] IIC
LED indications		
– Power	green	green
– Switching status	yellow	yellow
Housing	8-pole, 18 mm wide, Polycarbonate/ABS, flammability class V-0 per UL 94	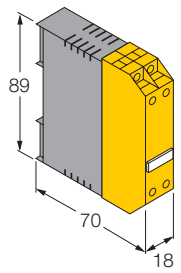
Mounting	snap-on clamps for top-hat rail (DIN 50022) or screw terminals for panel mounting	
Connection	via flat terminals with self-lifting pressure plates	
Connection profile	≤ 2 x 2.5 mm² or 2 x 1.5 mm² with wire sleeves	
Degree of protection (IEC 60529/EN 60529)	IP20	
Operating temperature	-25…+70 °C	

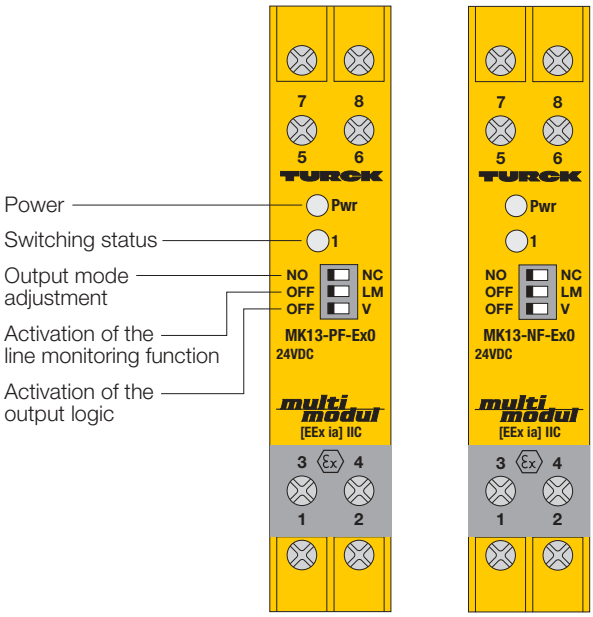

Isolating Switching Amplifier MK13-PF-Ex0/24VDC MK13-NF-Ex0/24VDC 1-channel

1

- **1-channel isolating switching amplifier**
- **Intrinsically safe input circuit EEx ia**
- **Area of application according to ATEX: II (1) GD**
- **Galvanic isolation between input circuit, output circuit and supply voltage**
- **Input circuit monitoring for wire-break and short-circuit (can be disabled)**
- **2 short-circuit protected transistor outputs, function programmable:**
  - **pnp (MK13-PF-Ex0)**
  - **npn (MK13-NF-Ex0)**
- **Optional separate output for error indications**
- **Selectable NO/NC output function**

The MK13-PF-Ex0 and MK13-NF-Ex0 switching amplifiers are single channel devices with intrinsically safe input circuit. They can be used in conjunction with sensors conforming to EN 60947-5-6 (NAMUR), variable resistors or potential-free contacts.

The devices have two short-circuit protected pnp or npn transistor outputs. Front panel switches select the function of the output (normally open mode = NO/or normally closed mode = NC and complementary function).
The input circuit is monitored for short-circuit and wire-break. The input circuit monitoring function can be disabled on front side switches or by jumpering terminals 3 and 4.

If the input monitoring function is active, error indications are provided by output 6. Switch position V represents complementary outputs. An external exclusive OR circuit monitoring may be used to evaluate faults in the input circuit.

The dual colour LED indicates the switching status (yellow) of the output. With an input circuit fault, the input circuit changes – with activated input circuit monitoring – the colour of the dual colour LED to red. Then the outputs are disabled.

When using mechanical contacts as the input device, the input circuit monitoring function must be disabled, or shunt resistors must be connected to the contacts (II).

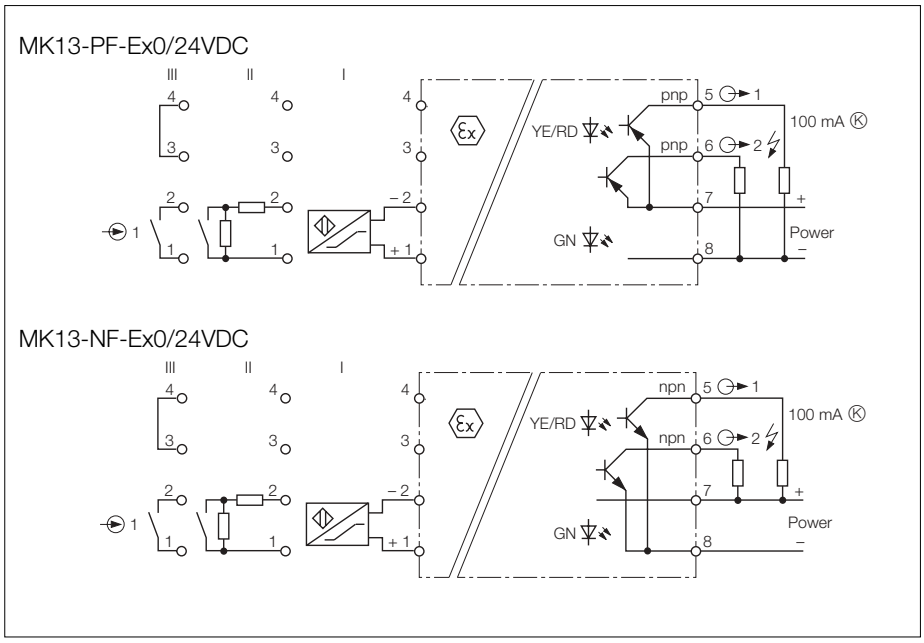

Isolating Switching Amplifier MK13-PF-Ex0/MK13-NF-Ex0

Type	MK13-PF-Ex0/24VDC	MK13-NF-Ex0/24VDC
Ident-no.	7542112	7542113
Supply voltage U_B	10...30 VDC	10...30 VDC
Ripple W_{PP}	≤ 10 %	≤ 10 %
Current consumption	approx. 20 mA	approx. 20 mA
Galvanic isolation	between input circuit, output circuit and supply voltage for 250 V_{rms}, test voltage 2.5 kV_{rms}	between input circuit, output circuit and supply voltage for 250 V_{rms}, test voltage 2.5 kV_{rms}
Input circuits	according to EN 60947-5-6 (NAMUR), intrinsically safe according to EN 50020	according to EN 60947-5-6 (NAMUR), intrinsically safe according to EN 50020
Operating characteristics		
– Voltage	8.2 V	8.2 V
– Current	8.2 mA	8.2 mA
Switching threshold	1.55 mA	1.55 mA
Hysteresis	typ. 0.4 mA	typ. 0.4 mA
Wire-break threshold	≤ 0.1 mA	≤ 0.1 mA
Short-circuit threshold	≥ 6 mA	≥ 6 mA
Contact configuration Of mechanical switches with active input circuit monitoring function	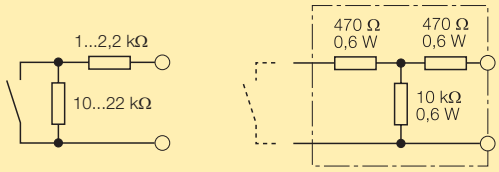	resistor module WM1, ident-no. 0912101
Output circuits	2 pnp transistor outputs	2 npn transistor outputs
Voltage drop	≤ 2.5 V	≤ 2.5 V
Switching current per output	≤ 100 mA, short-circuit protected	≤ 100 mA, short-circuit protected
Switching frequency	≤ 3 kHz	≤ 3 kHz
Ex-approval acc. to certificate of conformity	TÜV 03 ATEX 2235	TÜV 03 ATEX 2235
Maximum nominal values		
– No load voltage U_0	≤ 9.9 V	≤ 9.9 V
– Short-circuit current I_0	≤ 12 mA	≤ 12 mA
– Power P_0	≤ 30 mW	≤ 30 mW
Max. external inductances/capacitances L_0/C_0		
– [EEx ia] IIC	2/10/20 mH/5/3.6/3.2 µF	1/5/10 mH/1.1/0.79/0.7 µF
– [EEx ib] IIC	1/5/10 mH/1.1/0.79/0.7 µF	1.7 µF/23 mH
Marking of device	II (1) GD [EEx ia] IIC	II (1) GD [EEx ia] IIC
LED indications		
– Power	green	
– Switching status/fault indication	yellow/red (2-colour LED)	yellow/red (2-colour LED)
Housing	8-pole, 18 mm wide, Polycarbonate/ABS, flammability class V-0 per UL 94	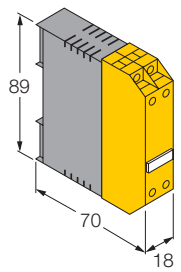
Mounting	snap-on clamps for top-hat rail (DIN 50022) or screw terminals for panel mounting	
Connection	via flat terminals with self-lifting pressure plates	
Connection profile	≤ 2 x 2.5 mm² or 2 x 1.5 mm² with wire sleeves	
Degree of protection (IEC 60529/EN 60529)	IP20	
Operating temperature	-25…+70 °C	

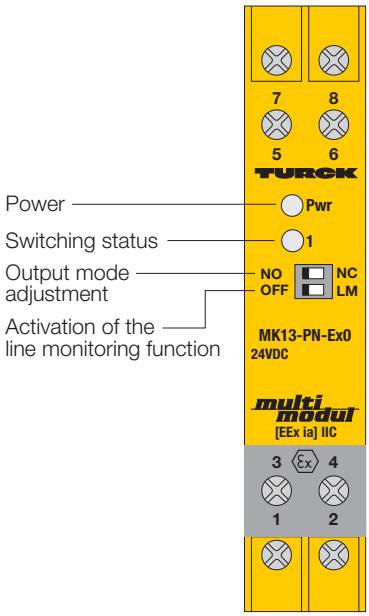

Isolating Switching Amplifier MK13-PN-Ex0/24VDC 1-channel

1

- **1-channel isolating switching amplifier**
- **Intrinsically safe input circuit EEx ia**
- **Area of application according to ATEX: II (1) GD**
- **Galvanic isolation between input circuit, output circuit and supply voltage**
- **Input circuit monitoring for wire-break and short-circuit (can be disabled)**
- **1 npn and 1 pnp short-circuit protected transistor output**
- **Selectable NO/NC output function**

The MK13-PN-Ex0 is a single channel switching amplifier with an intrinsically safe input circuit. It can be used in conjunction with sensors conforming to EN 60947-5-6 (NAMUR), variable resistors or potential-free contacts.

The device is equipped with one short-circuit protected pnp transistor output and one short-circuit protected npn transistor output. The output function is selected by a switch located on the front cover. Positions A and R represent normally open (NO) and normally closed (NC) modes, respectively. Both outputs are either activated or de-activated at the same time.

The input circuit is monitored for short-circuit and wire-break. The input circuit monitoring function can be disabled on front side switches or by jumpering terminals 3 and 4. When using mechanical contacts as the input device, the input circuit monitoring function must be disabled, or shunt resistors must be connected to the contacts (II).

The dual colour LED indicates the switching status (yellow) of the output. With an input circuit fault, the input circuit changes – with activated input circuit monitoring – the colour of the dual colour LED to red. Then the outputs are disabled.

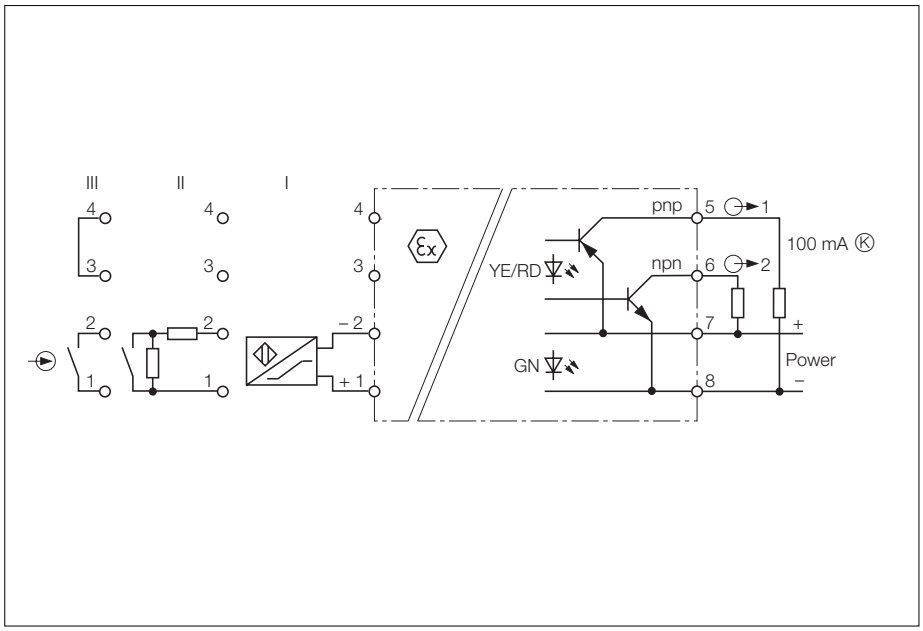

Isolating Switching Amplifier MK13-PN-Ex0

Type	MK13-PN-Ex0/24VDC
Ident-no.	7542114
Supply voltage U_B	10...30 VDC
Ripple W_{PP}	≤ 10 %
Current consumption	approx. 20 mA
Galvanic isolation	between input circuit, output circuit and supply voltage for 250 V_{rms}, test voltage 2.5 kV_{rms}
Input circuits	according to EN 60947-5-6 (NAMUR), intrinsically safe according to EN 50020
Operating characteristics	
– Voltage	8.2 V
– Current	8.2 mA
Switching threshold	1.55 mA
Hysteresis	typ. 0.4 mA
Wire-break threshold	≤ 0.1 mA
Short-circuit threshold	≥ 6 mA
Contact configuration Of mechanical switches with active input circuit monitoring function	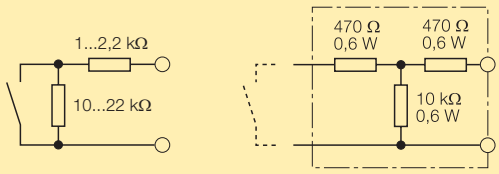 resistor module WM1, ident-no. 0912101
Output circuits	2 pnp transistor outputs
Voltage drop	≤ 2.5 V
Switching current output (5)	≤ 100 mA, short-circuit protected, pnp
Switching current output (6)	≤ 100 mA, short-circuit protected, npn
Switching frequency	≤ 3 kHz
Ex-approval acc. to certificate of conformity	TÜV 03 ATEX 2235
Maximum nominal values	
– No load voltage U_0	≤ 9.9 V
– Short-circuit current I_0	≤ 12 mA
– Power P_0	≤ 30 mW
Max. external inductances/capacitances L_0/C_0	
– [EEx ia] IIC	2/10/20 mH/5/3.6/3.2 µF
– [EEx ib] IIC	1/5/10 mH/1.1/0.79/0.7 µF
Marking of device	II (1) GD [EEx ia] IIC
LED indications	
– Power	green
– Switching status	yellow/red (dual-colour LED)
Housing	8-pole, 18 mm wide, Polycarbonate/ABS, flammability class V-0 per UL 94
Mounting	snap-on clamps for top-hat rail (DIN 50022) or screw terminals for panel mounting
Connection	via flat terminals with self-lifting pressure plates
Connection profile	≤ 2 x 2.5 mm^2 or 2 x 1.5 mm^2 with wire sleeves
Degree of protection (IEC 60529/EN 60529)	IP20
Operating temperature	-25…+70 °C

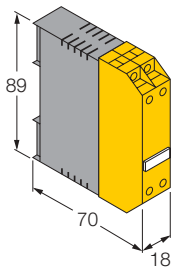

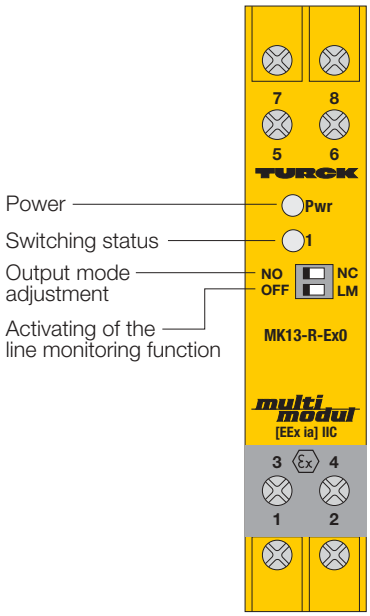

Isolating Switching Amplifier MK13-R-Ex0 1-channel

1

- **1-channel isolating switching amplifier**
- **Intrinsically safe input circuit**
- **Galvanic isolation between input circuit, output circuit and supply voltage**
- **Input circuit monitoring for wire-break and short-circuit (can be disabled)**
- **Relay output with one NO contact**
- **Selectable NO/NC output function**
- **Universal supply voltage (20...250 VAC/20...125 VDC)**

The MK13-R-Ex0 is a single channel switching amplifier with an intrinsically safe input circuit. It can be used in conjunction with sensors conforming to EN 60947-5-6 (NAMUR), variable resistors or potential-free contacts. The device is provided with a relay output with one NO contact.

A switch enables selection of the output function (normally open or normally closed mode).

The input circuit is monitored for short-circuit and wire-break. The input circuit monitoring function can be disabled on front side switches or by jumpering terminals 3 and 4.

When using mechanical contacts as the input device, the input circuit monitoring function must be disabled, or shunt-resistors must be connected to the contacts (II).

The dual colour LED indicates the switching status (yellow) of the output. With an input circuit fault, the input circuit changes – with activated input circuit monitoring – the colour of the dual colour LED to red. Then the relay output is de-energised.

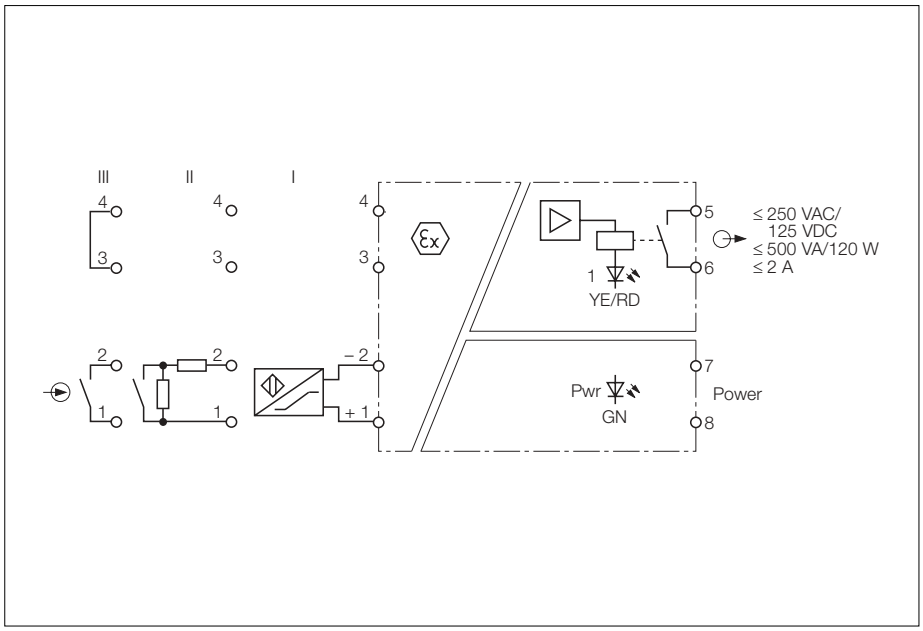

Isolating Switching Amplifier MK13-R-Ex0

Type	MK13-R-Ex0
Ident-no.	7542123
Supply voltage U_B	20...250 VAC/20...125 VDC
Line frequency (AC)	40...70 Hz
Power consumption	≤ 3 W
Galvanic isolation	between input and output circuit and supply voltage for 250 V_{rms} test voltage 2.5 kV_{rms}
Input circuits	according to EN 60947-5-6 (NAMUR), intrinsically safe according to EN 50020
Operating characteristics	
– Voltage	8.2 V
– Current	8.2 mA
Switching threshold	1.55 mA
Hysteresis	typ. 0.4 mA
Wire-break threshold	≤ 0.1 mA
Short-circuit threshold	≥ 6 mA
Contact configuration Of mechanical switches with active input circuit monitoring function	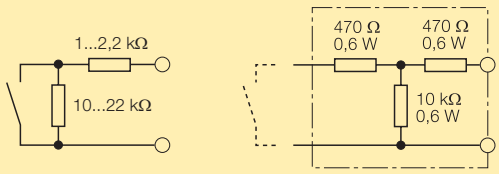 resistor module WM1, ident-no. 0912101
Output circuits	relay output (1 NO contact)
Switching voltage	250 VAC/125 VDC
Switching current	≤ 2 A
Switching capacity	≤ 500 VA/120 W
Switching frequency	≤ 10 Hz
Contact material	silver-alloy + 3 µm Au
Ex-approval acc. to certificate of conformity	pending
Maximum nominal values	
– No load voltage U_0	–
– Short-circuit current I_0	–
– Power P_0	–
Max. external inductances/capacitances L_0/C_0	
– [EEx ia] IIC	–
– [EEx ib] IIC	–
Marking of device	–
LED indications	
– Power	green
– Switching status	yellow
Housing	8-pole, 18 mm wide, Polycarbonate/ABS, flammability class V-0 per UL 94
Mounting	snap-on clamps for top-hat rail (DIN 50022) or screw terminals for panel mounting
Connection	via flat terminals with self-lifting pressure plates
Connection profile	≤ 2 x 2.5 mm² or 2 x 1.5 mm² with wire sleeves
Degree of protection (IEC 60529/EN 60529)	IP20
Operating temperature	-25…+70 °C

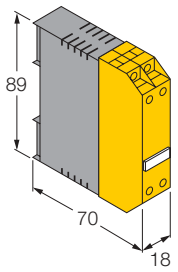

 Hans Turck GmbH & Co.KG • D–45466 Mülheim/Ruhr • Tel. 0208/4952-0 • Fax 0208/4952-264 • E-Mail: turckmh@mail.turck-globe.de • www.turck.com

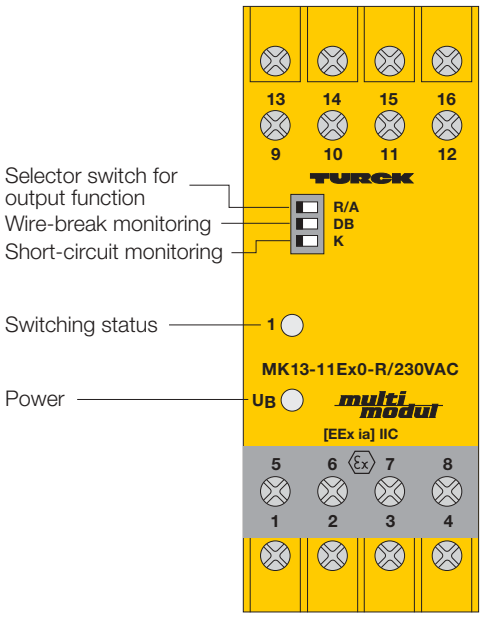

Isolating Switching Amplifier MK13-11Ex0-R/24VDC MK13-11Ex0-R/230VAC 1-channel

1

- **1-channel isolating switching amplifier**
- **Intrinsically safe input circuit EEx ia**
- **Area of application according to ATEX: II (1) G**
- **Galvanic isolation between input circuit, output circuit and supply voltage**
- **Input circuit monitoring for wire-break and short-circuit (can be disabled)**
- **Relay output with one SPDT contact**
- **Selectable NO/NC output function**

The MK13-11Ex0-R type switching amplifiers are single channel devices featuring an intrinsically safe input circuit. They can be connected to sensors according to EN 60947-5-6 (NAMUR), variable resistors or potential-free contacts. The device is provided with a relay output with one SPDT contact.

Three front panel progamming switches enable selection of the output function (normally open or normally closed mode) and separate activation and de-activation of wire-break (switch position DB) and short-circuit monitoring (switch position K). Switch positions A and R represent normally open mode (NO) and normally closed (NC) mode, respectively.

When using mechanical contacts as the input device, wire-break and short-circuit monitoring must be disabled or shunt resistors must be connected to the contacts (II). (See next page for contact configuration).

The green LED indicates that the device is powered. The dual colour LED indicates the switching status (yellow) as well as fault conditions (red). When the input circuit monitoring feature is activated, red illuminates to indicate a fault condition in the input circuit and the output relay is de-energised.

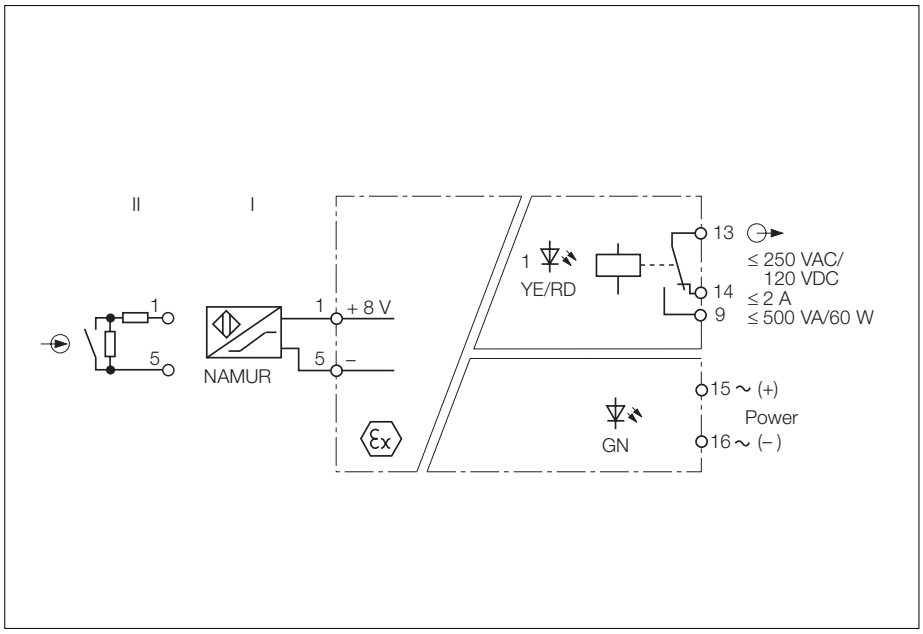

Isolating Switching Amplifier MK13-11Ex0-R

Type	MK13-11Ex0-R/230VAC	MK13-11Ex0-R/24VDC
Ident-no.	7541100	7541107
Supply voltage U_B	196...253 VAC	10...30 VDC
Line frequency/ripple W_{PP}	48...62 Hz	≤ 10 %
Power/current consumption	≤ 30 mA_{rms}	≤ 1,0 W
Galvanic isolation	between input circuit, output circuit and supply voltage for 250 V_{rms}, test voltage 2.5 kV_{rms}	between input circuit, output circuit and supply voltage for 250 V_{rms}, test voltage 2.5 kV_{rms}
Input circuits	according to EN 60947-5-6 (NAMUR), intrinsically safe according to EN 50020	according to EN 60947-5-6 (NAMUR), intrinsically safe according to EN 50020
Operating characteristics		
– Voltage	8 V	8 V
– Current	8 mA	8 mA
Switching threshold	1.55 mA	1.55 mA
Hysteresis	typ. 0.2 mA	typ. 0.2 mA
Wire-break threshold	≤ 0.1 mA	≤ 0.1 mA
Short-circuit threshold	≥ 6.0 mA	≥ 6.0 mA
Contact configuration Of mechanical switches with active input circuit monitoring function	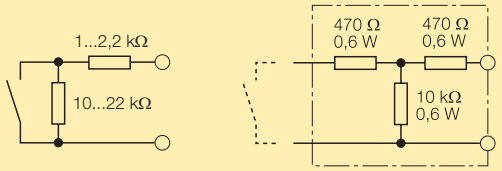	resistor module WM1, ident-no. 0912101
Output circuits	1 relay output (SPDT)	1 relay output (SPDT)
Switching voltage	≤ 250 VAC/120 VDC	≤ 250 VAC/120 VDC
Switching current per output	≤ 2 A	≤ 2 A
Switching capacity per output	≤ 500 VA/60 W	≤ 500 VA/60 W
Switching frequency	≤ 10 Hz	≤ 10 Hz
Contact material	silver-alloy + 3 µm Au	silver-alloy + 3 µm Au
Ex-approval acc. to certificate of conformity	PTB 99 ATEX 2083	PTB 99 ATEX 2083
Maximum nominal values		
– No load voltage U_0	≤ 11.9 V	≤ 11.9 V
– Short-circuit current I_0	≤ 36 mA	≤ 36 mA
Max. external inductances/capacitances L_0/C_0		
– [EEx ia] IIB	87 mH/9.4 µF	87 mH/9.4 µF
– [EEx ia] IIC	23 mH/1.45 µF	23 mH/1.45 µF
Marking of devices	II (1) G [EEx ia] IIC	II (1) G [EEx ia] IIC
LED indications		
– Power	green	green
– Switching status/fault indication	yellow/red (2-colour LED)	yellow/red (2-colour LED)
Housing	16-pole, 36 mm wide, Polycarbonate/ABS, flammability class V-0 per UL 94	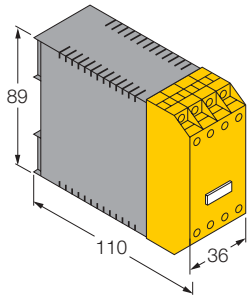
Mounting	snap-on clamps for top-hat rail (DIN 50022) or screw terminals for panel mounting	
Connection	via flat terminals with self-lifting pressure plates	
Connection profile	≤ 2 x 2.5 mm^2 or 2 x 1.5 mm^2 with wire sleeves	
Degree of protection (IEC 60529/EN 60529)	IP20	
Operating temperature	-25…+60 °C	

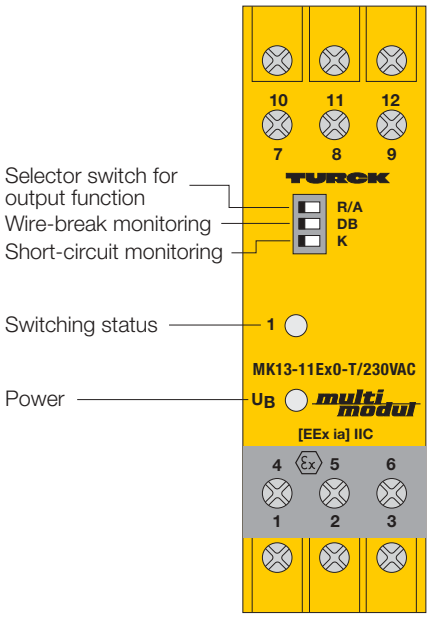

Isolating Switching Amplifier MK13-11Ex0-T/24VDC MK13-11Ex0-T/230VAC 1-channel

1

- **1-channel isolating switching amplifier**
- **Intrinsically safe input circuit EEx ia**
- **Area of application according to ATEX: II (1) G**
- **Galvanic isolation between input circuit, output circuit and supply voltage**
- **Input circuit monitoring for wire-break and short circuit (can be disabled)**
- **1 isolated, short-circuit and reverse polarity protected transistor output**
- **Selectable NO/NC output function**

The MK13-11Ex0-T type switching amplifiers are single channel devices featuring an intrinsically safe input circuit. They can be connected to sensors per EN 60947-5-6 (NAMUR), variable resistors or potential-free contacts.

The devices are provided with an isolated, short-circuit and reverse polarity protected transistor output.

Three front panel progamming switches enable selection of the output function (normally open or normally closed mode) and separate activation and de-activation of wire-break (switch position DB) and short-circuit monitoring (switch position K). Switch positions A and R represent normally open mode (NO) and normally closed (NC) mode, respectively.

When using mechanical contacts as the input device, wire-break and short-circuit monitoring must be disabled or shunt resistors must be connected to the contacts (II). (See next page for contact configuration).

The green LED indicates that the device is powered. The dual colour LED indicates the switching status (yellow) as well as fault conditions (red). When the input circuit monitoring feature is activated, red illuminates to indicate a fault condition in the input circuit and the transistor output is disabled.

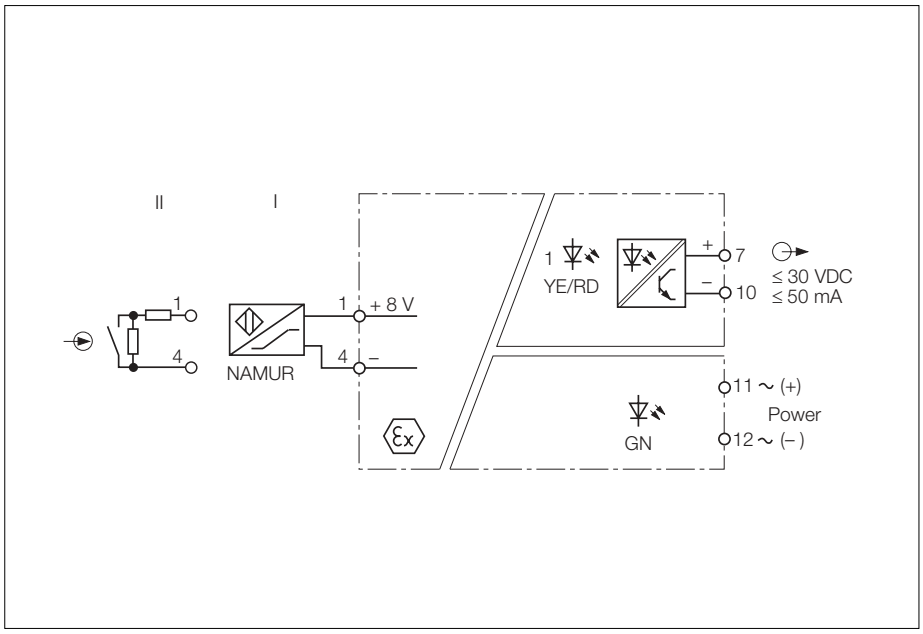

Isolating Switching Amplifier MK13-11Ex0-T

Type	MK13-11Ex0-T/230VAC	MK13-11Ex0-T/24VDC
Ident-no.	7542100	7542107
Supply voltage U_B	196...253 VAC	10...30 VDC
Line frequency/ripple W_{PP}	48...62 Hz	≤ 10 %
Power/current consumption	≤ 30 mA_{rms}	≤ 1.1 W
Galvanic isolation	between input circuit, output circuit and supply voltage for 250 V_{rms}, test voltage 2.5 kV_{rms}	between input circuit, output circuit and supply voltage for 250 V_{rms}, test voltage 2.5 kV_{rms}
Input circuits	according to EN 60947-5-6 (NAMUR), intrinsically safe according to EN 50020	according to EN 60947-5-6 (NAMUR), intrinsically safe according to EN 50020
Operating characteristics		
– Voltage	8 V	8 V
– Current	8 mA	8 mA
Switching threshold	1.55 mA	1.55 mA
Hysteresis	typ. 0.2 mA	typ. 0.2 mA
Wire-break threshold	≤ 0.1 mA	≤ 0.1 mA
Short-circuit threshold	≥ 6.0 mA	≥ 6.0 mA
Contact configuration Of mechanical switches with active input circuit monitoring function	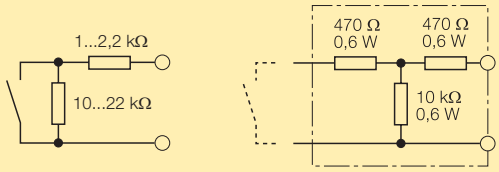	resistor module WM1, ident-no. 0912101
Output circuits	1 pnp transistor output potential-free, short-circuit protected	1 pnp transistor output potential-free, short-circuit protected
Switching voltage	≤ 30 VDC	≤ 30 VDC
Switching current per output	≤ 50 mA	≤ 50 mA
Switching frequency	≤ 3 kHz	≤ 3 kHz
Voltage drop	≤ 1.3 V	≤ 1.3 V
Ex-approval acc. to certificate of conformity	PTB 99 ATEX 2083	PTB 99 ATEX 2083
Maximum nominal values		
– No load voltage U_0	≤ 11.9 V	≤ 11.9 V
– Short-circuit current I_0	≤ 36 mA	≤ 36 mA
Max. external inductances/capacitances L_0/C_0		
– [EEx ia] IIB	87 mH/9.4 µF	87 mH/9.4 µF
– [EEx ia] IIC	23 mH/1.45 µF	23 mH/1.45 µF
Marking of devices	II (1) G [EEx ia] IIC	II (1) G [EEx ia] IIC
LED indications		
– Power	green	green
– Switching status/fault indication	yellow/red (2-colour LED)	yellow/red (2-colour LED)
Housing	12-pole, 27 mm wide, Polycarbonate/ABS, flammability class V-0 per UL 94	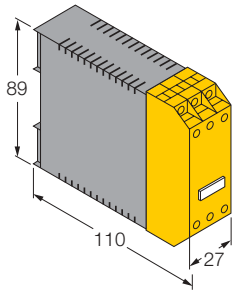
Mounting	snap-on clamps for top-hat rail (DIN 50022) or screw terminals for panel mounting	
Connection	via flat terminals with self-lifting pressure plates	
Connection profile	≤ 2 x 2.5 mm^2 or 2 x 1.5 mm^2 with wire sleeves	
Degree of protection (IEC 60529/EN 60529)	IP20	
Operating temperature	-25…+60 °C	

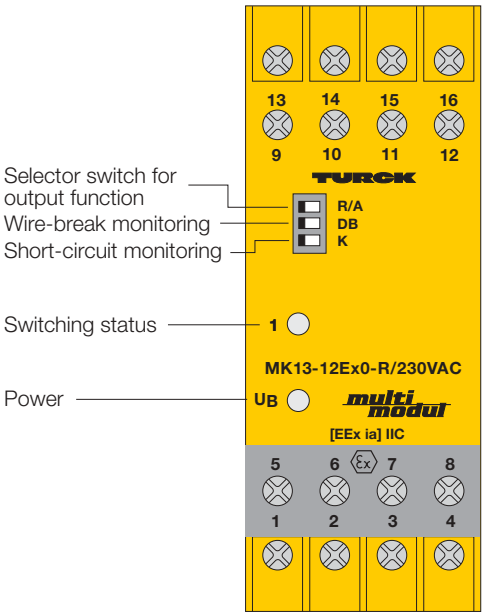

Isolating Switching Amplifier MK13-12Ex0-R/24VDC MK13-12Ex0-R/230VAC 1-channel

1

- **1-channel isolating switching amplifier**
- **Intrinsically safe input circuit EEx ia**
- **Area of application according to ATEX: II (1) G**
- **Galvanic isolation between input circuit, output circuit and supply voltage**
- **Input circuit monitoring for wire-break and short circuit (can be disabled)**
- **2 relay outputs, each with one SPDT contact**
- **Selectable NO/NC output function**

The MK13-12Ex0-R type switching amplifiers are single channel devices featuring an intrinsically safe input circuit. They can be connected to sensors according to EN 60947-5-6 (NAMUR), variable resistors or potential-free contacts.

The output circuit is equipped with two relays operating in parallel, each with one SPDT contact.

Three front panel progamming switches enable selection of the output function (normally open or normally closed mode) and separate activation and de-activation of wire-break (switch position DB) and short-circuit monitoring (switch position K). Switch positions A and R represent normally open mode (NO) and normally closed (NC) mode, respectively.

When using mechanical contacts as the input device, wire-break and short-circuit monitoring must be disabled or shunt resistors must be connected to the contacts (II). (See next page for contact configuration).

The green LED indicates that the device is powered. The dual colour LED indicates the switching status (yellow) as well as fault conditions (red). When the input circuit monitoring feature is activated, red illuminates to indicate a fault condition in the input circuit and the output relays are de-energised.

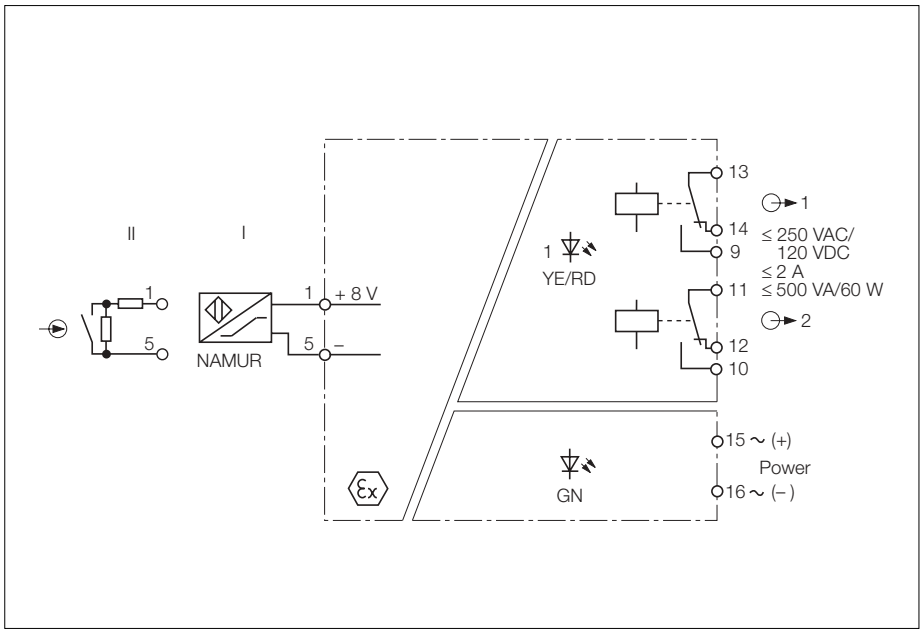

Isolating Switching Amplifier MK13-12Ex0-R

Type	MK13-12Ex0-R/230VAC	MK13-12Ex0-R/24VDC
Ident-no.	7541110	7541117
Supply voltage U_B	196...253 VAC	10...30 VDC
Line frequency/ripple W_{PP}	48...62 Hz	≤ 10 %
Power/current consumption	≤ 30 mA_{rms}	≤ 1.3 W
Galvanic isolation	between input circuit, output circuit and supply voltage for 250 V_{rms}, test voltage 2.5 kV_{rms}	between input circuit, output circuit and supply voltage for 250 V_{rms}, test voltage 2.5 kV_{rms}
Input circuits	according to EN 60947-5-6 (NAMUR), intrinsically safe according to EN 50020	according to EN 60947-5-6 (NAMUR), intrinsically safe according to EN 50020
Operating characteristics		
– Voltage	8 V	8 V
– Current	8 mA	8 mA
Switching threshold	1.55 mA	1.55 mA
Hysteresis	typ. 0.2 mA	typ. 0.2 mA
Wire-break threshold	≤ 0.1 mA	≤ 0.1 mA
Short-circuit threshold	≥ 6.0 mA	≥ 6.0 mA
Contact configuration Of mechanical switches with active input circuit monitoring function	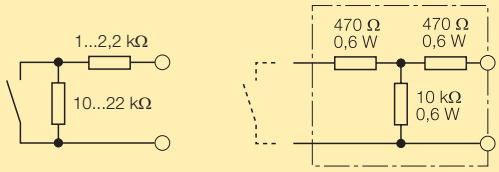	resistor module WM1, ident-no. 0912101
Output circuits	2 relay outputs (SPDT)	2 relay outputs (SPDT)
Switching voltage	≤ 250 VAC/120 VDC	≤ 250 VAC/120 VDC
Switching current per output	≤ 2 A	≤ 2 A
Switching capacity per output	≤ 500 VA/60 W	≤ 500 VA/60 W
Switching frequency	≤ 10 Hz	≤ 10 Hz
Contact material	silver-alloy + 3 µm Au	silver-alloy + 3 µm Au
Ex-approval acc. to certificate of conformity	PTB 99 ATEX 2083	PTB 99 ATEX 2083
Maximum nominal values		
– No load voltage U_0	≤ 11.9 V	≤ 11.9 V
– Short-circuit current I_0	≤ 36 mA	≤ 36 mA
Max. external inductances/capacitances L_0/C_0		
– [EEx ia] IIB	87 mH/9.4 µF	87 mH/9.4 µF
– [EEx ia] IIC	23 mH/1.45 µF	23 mH/1.45 µF
Marking of devices	II (1) G [EEx ia] IIC	II (1) G [EEx ia] IIC
LED indications		
– Power	green	green
– Switching status/fault indication	yellow/red (2-colour LED)	yellow/red (2-colour LED)
Housing	16-pole, 36 mm wide, Polycarbonate/ABS, flammability class V-0 per UL 94	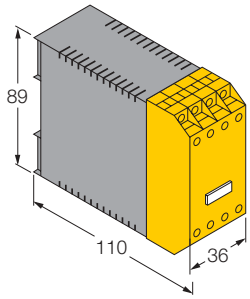
Mounting	snap-on clamps for top-hat rail (DIN 50022) or screw terminals for panel mounting	
Connection	via flat terminals with self-lifting pressure plates	
Connection profile	≤ 2 x 2.5 mm^2 or 2 x 1.5 mm^2 with wire sleeves	
Degree of protection (IEC 60529/EN 60529)	IP20	
Operating temperature	-25…+60 °C	

 Hans Turck GmbH & Co.KG • D–45466 Mülheim/Ruhr • Tel. 0208/4952-0 • Fax 0208/4952-264 • E-Mail: turckmh@mail.turck-globe.de • www.turck.com

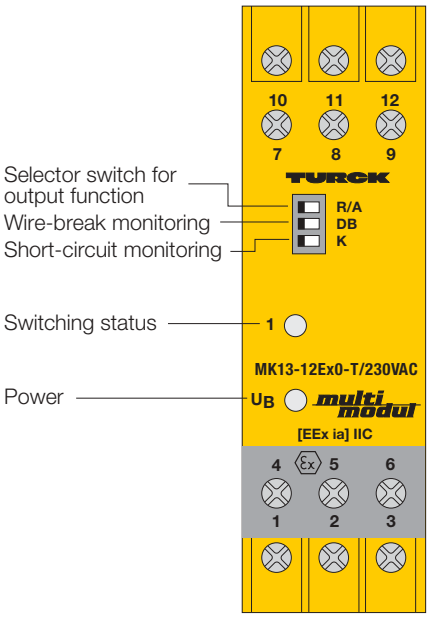

Isolating Switching Amplifier MK13-12Ex0-T/24VDC MK13-12Ex0-T/230VAC 1-channel

1

- **1-channel isolating switching amplifier**
- **Intrinsically safe input circuit EEx ia**
- **Area of application according to ATEX: II (1) G**
- **Galvanic isolation between input circuit, output circuit and supply voltage**
- **Input circuit monitoring for wire-break and short-circuit (can be disabled)**
- **2 isolated transistor outputs**
- **Selectable NO/NC output function**

The MK13-12Ex0-T type switching amplifiers are single channel devices featuring an intrinsically safe input circuit. They can be connected to sensors per EN 60947-5-6 (NAMUR), variable resistors or potential-free contacts.

The output circuit is equipped with two isolated transistor outputs operating in parallel.

Three front panel progamming switches enable selection of the output function (normally open or normally closed mode) and separate activation and de-activation of wire-break (switch position DB) and short-circuit monitoring (switch position K). Switch positions A and R represent normally open mode (NO) and normally closed (NC) mode, respectively.

When using mechanical contacts as the input device, wire-break and short-circuit monitoring must be disabled or shunt resistors must be connected to the contacts (II). (See next page for contact configuration).

The green LED indicates that the device is powered. The dual colour LED indicates the switching status (yellow) as well as fault conditions (red). When the input circuit monitoring feature is activated, red illuminates to indicate a fault condition in the input circuit and the transistor outputs are disabled.

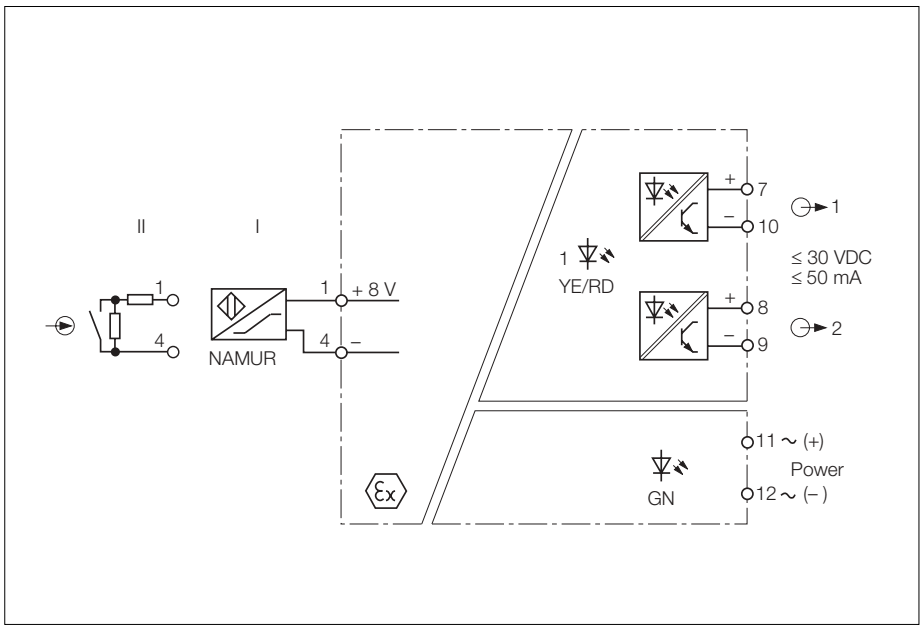

Isolating Switching Amplifier MK13-12Ex0-T

Type	MK13-12Ex0-T/230VAC	MK13-12Ex0-T/24VDC
Ident-no.	7541150	7541157
Supply voltage U_B	196...253 VAC	10...30 VDC
Line frequency/ripple W_{PP}	48...62 Hz	≤ 10 %
Power/current consumption	≤ 30 mA_{rms}	≤ 1.1 W
Galvanic isolation	between input circuit, output circuit and supply voltage for 250 V_{rms}, test voltage 2.5 kV_{rms}	between input circuit, output circuit and supply voltage for 250 V_{rms}, test voltage 2.5 kV_{rms}
Input circuits	according to EN 60947-5-6 (NAMUR), intrinsically safe according to EN 50020	according to EN 60947-5-6 (NAMUR), intrinsically safe according to EN 50020
Operating characteristics		
– Voltage	8 V	8 V
– Current	8 mA	8 mA
Switching threshold	1.55 mA	1.55 mA
Hysteresis	typ. 0.2 mA	typ. 0.2 mA
Wire-break threshold	≤ 0.1 mA	≤ 0.1 mA
Short-circuit threshold	≥ 6.0 mA	≥ 6.0 mA
Contact configuration Of mechanical switches with active input circuit monitoring function	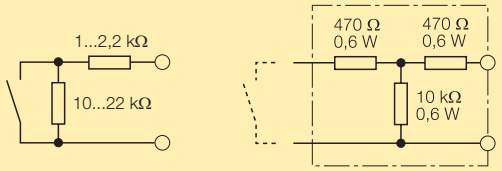	resistor module WM1, ident-no. 0912101
Output circuits	2 pnp transistor outputs potential-free, short-circuit protected	2 pnp transistor outputs potential-free, short-circuit protected
Switching voltage	≤ 30 VDC	≤ 30 VDC
Switching current per output	≤ 50 mA	≤ 50 mA
Switching frequency	≤ 3 kHz	≤ 3 kHz
Voltage drop	≤ 1.3 V	≤ 1.3 V
Ex-approval acc. to certificate of conformity	PTB 99 ATEX 2083	PTB 99 ATEX 2083
Maximum nominal values		
– No load voltage U_0	≤ 11.9 V	≤ 11.9 V
– Short-circuit current I_0	≤ 36 mA	≤ 36 mA
Max. external inductances/capacitances L_0/C_0		
– [EEx ia] IIB	87 mH/9.4 µF	87 mH/9.4 µF
– [EEx ia] IIC	23 mH/1.45 µF	23 mH/1.45 µF
Marking of devices	II (1) G [EEx ia] IIC	II (1) G [EEx ia] IIC
LED indications		
– Power	green	green
– Switching status/fault indication	yellow/red (2-colour LED)	yellow/red (2-colour LED)
Housing	12-pole, 27 mm wide, Polycarbonate/ABS, flammability class V-0 per UL 94	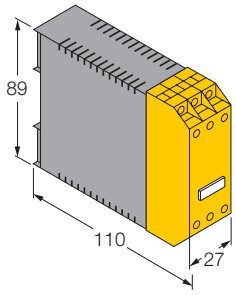
Mounting	snap-on clamps for top-hat rail (DIN 50022) or screw terminals for panel mounting	
Connection	via flat terminals with self-lifting pressure plates	
Connection profile	≤ 2 x 2.5 mm^2 or 2 x 1.5 mm^2 with wire sleeves	
Degree of protection (IEC 60529/EN 60529)	IP20	
Operating temperature	-25…+60 °C	

 Hans Turck GmbH & Co.KG • D–45466 Mülheim/Ruhr • Tel. 0208/4952-0 • Fax 0208/4952-264 • E-Mail: turckmh@mail.turck-globe.de • www.turck.com

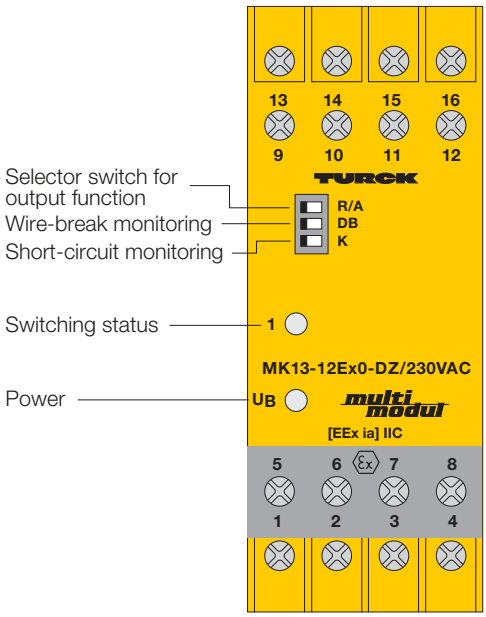

Isolating Switching Amplifier MK13-12Ex0-DZ/230VAC 1-channel

1

- **1-channel isolating switching amplifier**
- **Intrinsically safe input circuit EEx ia**
- **Area of application according to ATEX: II (1) G**
- **Galvanic isolation between input circuit, output circuit and supply voltage**
- **Input circuit monitoring for wire-break and short-circuit (can be disabled)**
- **2 potential-free electronic outputs in parallel for AC and DC voltages**
- **Switching capacity 250 VUC/ 130 mA$_{rms}$**
- **Selectable NO/NC output function**

The isolating switching amplifiers MK13-12Ex0-DZ are single channel devices featuring an intrinsically safe input circuit. They can be connected to sensors according to EN 60947-5-6 (NAMUR), variable resistors or potential-free contacts.

The output circuit consists of two potential-free electronic outputs which operate in parallel and are suited for switching 250 VUC up to 130 mA$_{rms}$.

Three front panel progamming switches enable selection of the output function (normally open or normally closed mode) and separate activation and de-activation of wire-break (switch position DB) and short-circuit monitoring (switch position K).

Switch positions A and R represent normally open mode (NO) and normally closed (NC) mode, respectively.
When using mechanical contacts as the input device, wire-break and short-circuit monitoring must be disabled or shunt resistors must be connected to the contacts (II). (See next page for contact configuration).

The green LED indicates that the device is powered. The dual colour LED indicates the switching status (yellow) as well as fault conditions (red). When the input circuit monitoring feature is activated, red illuminates to indicate a fault condition in the input circuit and the electronic outputs are de-energised.

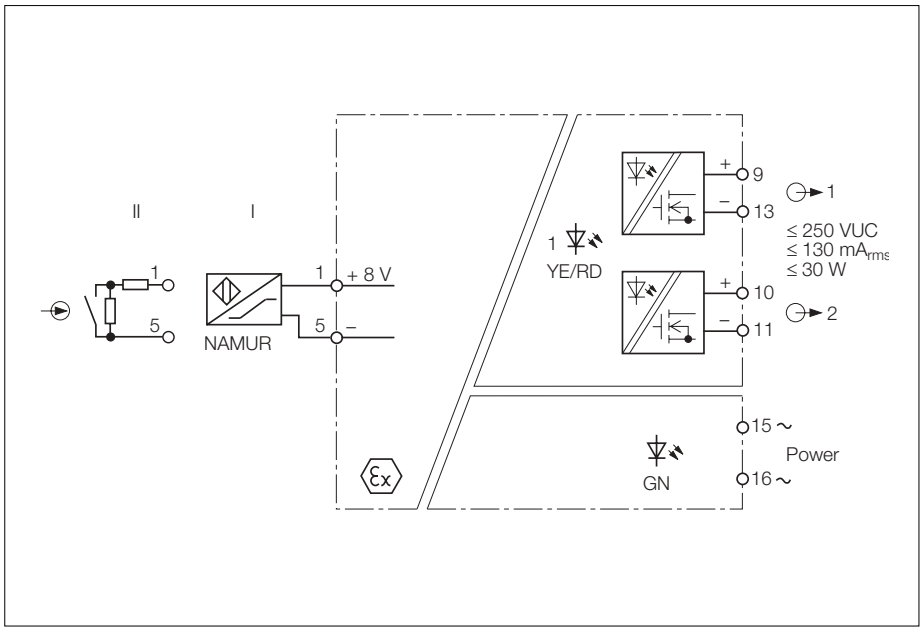

Isolating Switching Amplifier MK13-12Ex0-DZ

Type	MK13-12Ex0-DZ/230VAC
Ident-no.	7542500
Supply voltage U_B	196...253 VAC
Line frequency/ripple W_{PP}	48...62 Hz
Power/current consumption	≤ 30 mA_{rms}
Galvanic isolation	between input circuit, output circuit and supply voltage for 250 V_{rms}, test voltage 2.5 kV_{rms}
Input circuits	according to EN 60947-5-6 (NAMUR), intrinsically safe according to EN 50020
Operating characteristics	
– Voltage	8 V
– Current	8 mA
Switching threshold	1.55 mA
Hysteresis	typ. 0.2 mA
Wire-break threshold	≤ 0.1 mA
Short-circuit threshold	≥ 6.0 mA
Contact configuration Of mechanical switches with active input circuit monitoring function	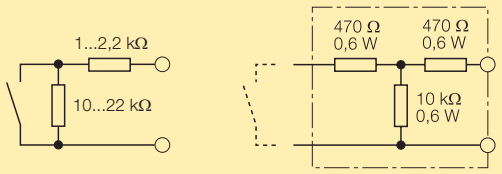 resistor module WM1, ident-no. 0912101
Output circuits	2 bidrectional MOSFET outputs, potential-free
Switching voltage	≤ 250 VUC
Switching current per output	≤ 130 mA_{rms}
Switching capacity per output	≤ 30 W
Switching frequency	≤ 1 kHz for low currents ≤ 100 Hz at 130 mA
Interior resistance $R_{DS\ on}$	approx. 27 Ω
Ex-approval acc. to certificate of conformity	PTB 99 ATEX 2083
Maximum nominal values	
– No load voltage U_0	≤ 11.9 V
– Short-circuit current I_0	≤ 36 mA
Max. external inductances/capacitances L_0/C_0	
– [EEx ia] IIB	87 mH/9.4 µF
– [EEx ia] IIC	23 mH/1.45 µF
Marking of devices	II (1) G [EEx ia] IIC
LED indications	
– Power	green
– Switching status/fault indication	yellow/red (2-colour LED)
Housing	16-pole, 36 mm wide, Polycarbonate/ABS, flammability class V-0 per UL 94
Mounting	snap-on clamps for top-hat rail (DIN 50022) or screw terminals for panel mounting
Connection	via flat terminals with self-lifting pressure plates
Connection profile	≤ 2 x 2.5 mm^2 or 2 x 1.5 mm^2 with wire sleeves
Degree of protection (IEC 60529/EN 60529)	IP20
Operating temperature	-25…+60 °C

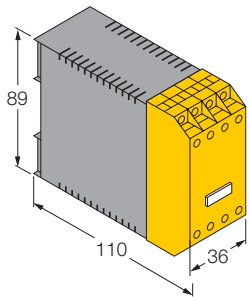

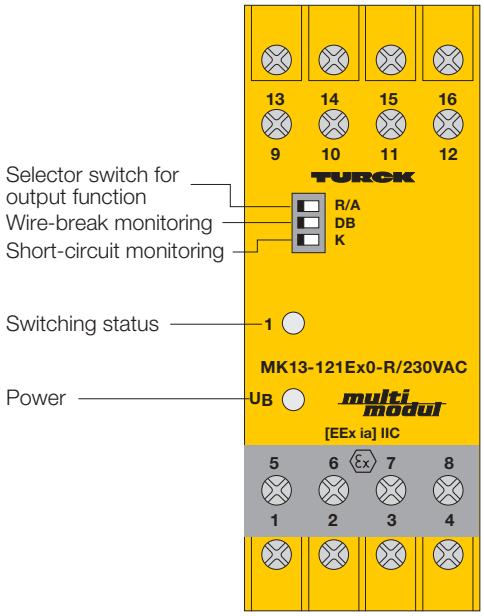

Isolating Switching Amplifier MK13-121Ex0-R/24VDC MK13-121Ex0-R/230VAC 1-channel

1

- **1-channel isolating switching amplifier with common alarm output**
- **Intrinsically safe input circuit EEx ia**
- **Area of application according to ATEX: II (1) G**
- **Galvanic isolation between input circuit, output circuit and supply voltage**
- **Input circuit monitoring for wire-break and short-circuit (can be disabled)**
- **1 switching and 1 alarm output**
- **Selectable NO/NC output function**

The MK13-121Ex0-R type switching amplifiers are single channel devices featuring an intrinsically safe input circuit. They can be connected to sensors according to EN 60947-5-6 (NAMUR), variable resistors or potential-free contacts. The switching output and the common alarm output each feature a relay with an SPDT contact.

Three front panel programming switches enable selection of the output function (normally open or normally closed mode) and separate activation and de-activation of wire-break (switch position DB) and short-circuit monitoring (switch position K). Switch positions A and R represent normally open mode (NO) and normally closed (NC) mode, respectively.

When using mechanical contacts as the input device, wire-break and short-circuit monitoring must be disabled or shunt resistors must be connected to the contacts (II). (See next page for contact configuration).

The green LED indicates that the device is powered. The dual colour LED indicates the switching status (yellow) as well as fault conditions (red). When the input circuit monitoring feature is activated, red illuminates to indicate a fault condition with a wire break or short circuit in the input circuit and the output and alarm relay are de-energised.

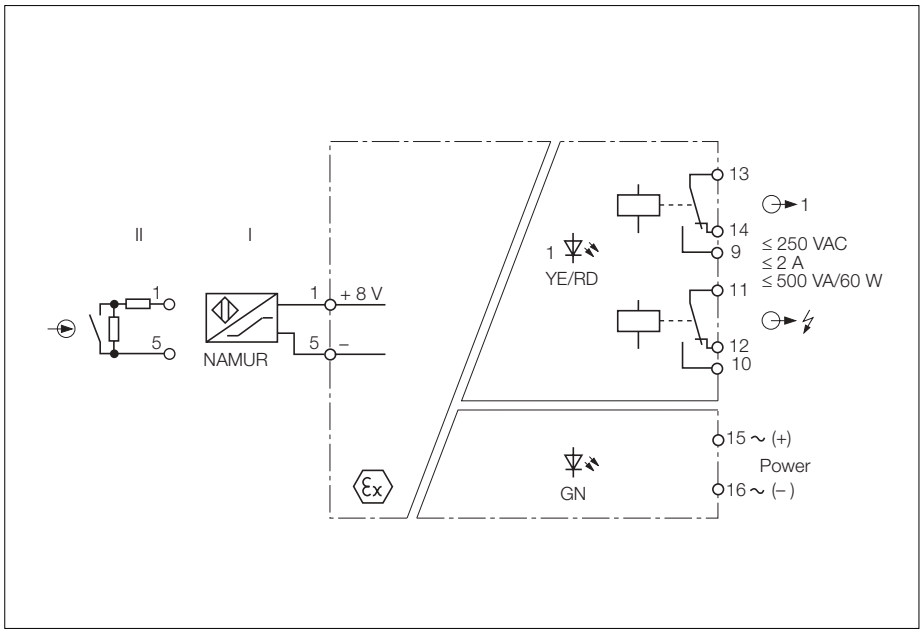

Isolating Switching Amplifier MK13-12Ex0-T

Type	MK13-121Ex0-R/230VAC	MK13-121Ex0-R/24VDC
Ident-no.	7541160	7541167
Supply voltage U_B	196...253 VAC	10...30 VDC
Line frequency/ripple W_{PP}	48...62 Hz	≤ 10 %
Power/current consumption	≤ 30 mA_{rms}	≤ 1.3 W
Galvanic isolation	between input circuit, output circuit and supply voltage for 250 V_{rms}, test voltage 2.5 kV_{rms}	between input circuit, output circuit and supply voltage for 250 V_{rms}, test voltage 2.5 kV_{rms}
Input circuits	according to EN 60947-5-6 (NAMUR), intrinsically safe according to EN 50020	according to EN 60947-5-6 (NAMUR), intrinsically safe according to EN 50020
Operating characteristics		
– Voltage	8 V	8 V
– Current	7 mA	7 mA
Switching threshold	1.55 mA	1.55 mA
Hysteresis	typ. 0.2 mA	typ. 0.2 mA
Wire-break threshold	≤ 0.1 mA	≤ 0.1 mA
Short-circuit threshold	≥ 6 mA	≥ 6 mA
Contact configuration Of mechanical switches with active input circuit monitoring function	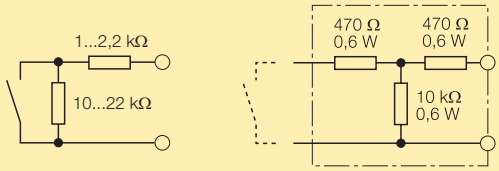	resistor module WM1, ident-no. 0912101
Output circuits	2 relay outputs (SPDT)	2 relay outputs (SPDT)
Switching voltage	≤ 250 V	≤ 250 V
Switching current per output	≤ 2 A	≤ 2 A
Switching capacity per output	≤ 500 VA/60 W	≤ 500 VA/60 W
Switching frequency	≤ 10 Hz	≤ 10 Hz
Contact material	silver-alloy + 3 µm Au	silver-alloy + 3 µm Au
Ex-approval acc. to certificate of conformity	PTB 99 ATEX 2083	PTB 99 ATEX 2083
Maximum nominal values		
– No load voltage U_0	≤ 11.9 V	≤ 11.9 V
– Short-circuit current I_0	≤ 36 mA	≤ 36 mA
Max. external inductances/capacitances L_0/C_0		
– [EEx ia] IIB	87 mH/9.4 µF	87 mH/9.4 µF
– [EEx ia] IIC	23 mH/1.45 µF	23 mH/1.45 µF
Marking of devices	II (1) G [EEx ia] IIC	II (1) G [EEx ia] IIC
LED indications		
– Power	green	green
– Switching status/fault indication	yellow/red (2-colour LED)	yellow/red (2-colour LED)
Housing	16-pole, 36 mm wide, Polycarbonate/ABS, flammability class V-0 per UL 94	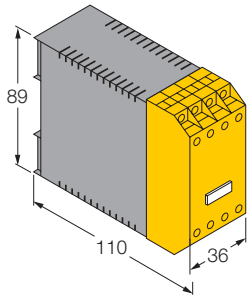
Mounting	snap-on clamps for top-hat rail (DIN 50022) or screw terminals for panel mounting	
Connection	via flat terminals with self-lifting pressure plates	
Connection profile	≤ 2 x 2.5 mm^2 or 2 x 1.5 mm^2 with wire sleeves	
Degree of protection (IEC 60529/EN 60529)	IP20	
Operating temperature	-25…+60 °C	

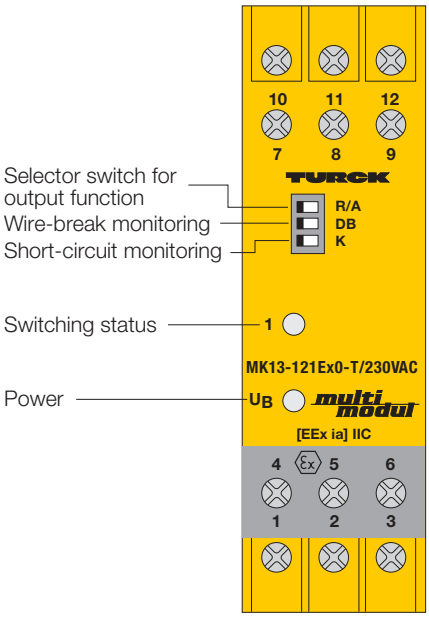

Isolating Switching Amplifier MK13-121Ex0-T/24VDC MK13-121Ex0-T/230VAC 1-channel

1

- **1-channel isolating switching amplifier with common alarm output**
- **Intrinsically safe input circuit EEx ia**
- **Area of application according to ATEX: II (1) G**
- **Galvanic isolation between input circuit, output circuit and supply voltage**
- **Input circuit monitoring for wire-break and short-circuit (can be disabled)**
- **1 switching and 1 alarm output**
- **2 isolated, short-circuit and reverse polarity protected transistor outputs**
- **Selectable NO/NC output function**

The MK13-121Ex0-T type switching amplifiers are single channel devices featuring an intrinsically safe input circuit. They can be connected to sensors according to EN 60947-5-6 (NAMUR), variable resistors or potential-free contacts.

Three front panel programming switches enable selection of the output function (normally open or normally closed mode) and separate activation and de-activation of wire-break (switch position DB) and short-circuit monitoring (switch position K). Switch positions A and R represent normally open mode (NO) and normally closed (NC) mode, respectively.

Switching and alarm outputs are equipped with an isolated, short-circuit and reverse polarity protected transistor output.

When using mechanical contacts as the input device, wire-break and short-circuit monitoring must be disabled or shunt resistors must be connected to the contacts (II). (See next page for contact configuration).

The green LED indicates that the device is powered. The dual colour LED indicates the switching status (yellow) as well as fault conditions (red). When the input circuit monitoring feature is activated, red illuminates to indicate a fault condition in the input circuit and the transistor and alarm output are disabled.

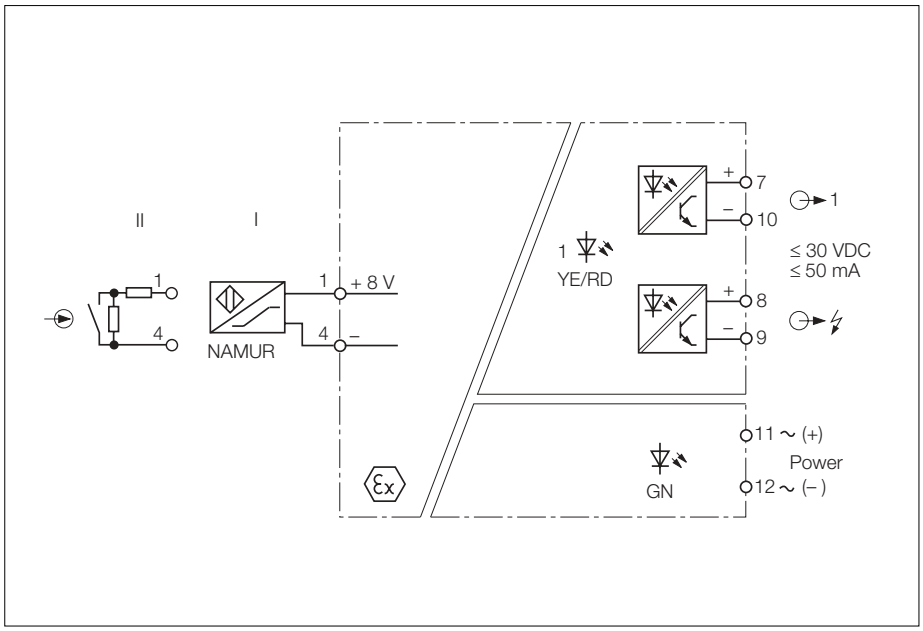

Isolating Switching Amplifier MK13-121Ex0-T

Type	MK13-121Ex0-T/230VAC	MK13-121Ex0-T/24VDC
Ident-no.	7542260	7542267
Supply voltage U_B	195.5...253 VAC	10...30 VDC
Line frequency/ripple W_{PP}	48...62 Hz	≤ 10 %
Power/current consumption	≤ 30 mA_{rms}	≤ 1.1 W
Galvanic isolation	between input circuit, output circuit and supply voltage for 250 V_{rms}, test voltage 2.5 kV_{rms}	between input circuit, output circuit and supply voltage for 250 V_{rms}, test voltage 2.5 kV_{rms}
Input circuits	according to EN 60947-5-6 (NAMUR), intrinsically safe according to EN 50020	according to EN 60947-5-6 (NAMUR), intrinsically safe according to EN 50020
Operating characteristics		
– Voltage	8 V	8 V
– Current	7 mA	7 mA
Switching threshold	1.55 mA	1.55 mA
Hysteresis	typ. 0.2 mA	typ. 0.2 mA
Wire-break threshold	≤ 0.1 mA	≤ 0.1 mA
Short-circuit threshold	≥ 6 mA	≥ 6 mA
Contact configuration Of mechanical switches with active input circuit monitoring function	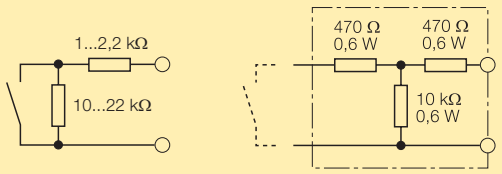	resistor module WM1, ident-no. 0912101
Output circuits	2 pnp transistor outputs potential-free, short-circuit protected	2 pnp transistor outputs potential-free, short-circuit protected
Switching voltage	≤ 30 VDC	≤ 30 VDC
Switching current per output	≤ 50 mA	≤ 50 mA
Switching frequency	≤ 3 kHz	≤ 3 kHz
Voltage drop	≤ 1.3 V	≤ 1.3 V
Ex-approval acc. to certificate of conformity	PTB 99 ATEX 2083	PTB 99 ATEX 2083
Maximum nominal values		
– No load voltage U_0	≤ 11.9 V	≤ 11.9 V
– Short-circuit current I_0	≤ 36 mA	≤ 36 mA
Max. external inductances/capacitances L_0/C_0		
– [EEx ia] IIB	87 mH/9.4 µF	87 mH/9.4 µF
– [EEx ia] IIC	23 mH/1.45 µF	23 mH/1.45 µF
Marking of devices	II (1) G [EEx ia] IIC	II (1) G [EEx ia] IIC
LED indications		
– Power	green	green
– Switching status/fault indication	yellow/red (2-colour LED)	yellow/red (2-colour LED)
Housing	12-pole, 27 mm wide, Polycarbonate/ABS, flammability class V-0 per UL 94	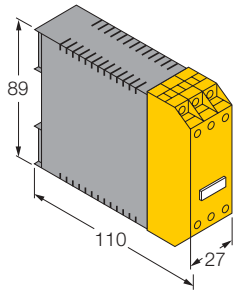
Mounting	snap-on clamps for top-hat rail (DIN 50022) or screw terminals for panel mounting	
Connection	via flat terminals with self-lifting pressure plates	
Connection profile	≤ 2 x 2.5 mm^2 or 2 x 1.5 mm^2 with wire sleeves	
Degree of protection (IEC 60529/EN 60529)	IP20	
Operating temperature	-25…+60 °C	

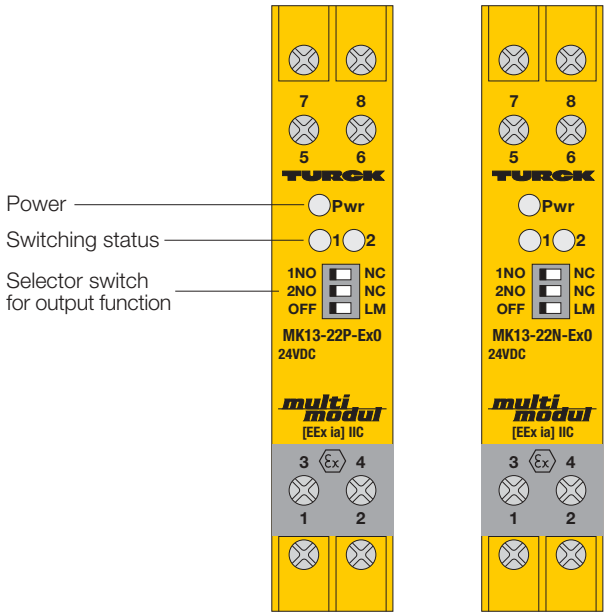

Isolating Switching Amplifier MK13-22P-Ex0/24VDC MK13-22N-Ex0/24VDC 2-channel

- **2-channel isolating switching amplifier**
- **Intrinsically safe input circuits EEx ia**
- **Area of application according to ATEX: II (1) GD**
- **Galvanic isolation between input circuits, output circuits and supply voltage**
- **Input circuit monitoring for wire-break and short-circuit (cannot be disabled)**
- **2 short-circuit protected transistor outputs:**
  - **pnp (MK13-22P-Ex0)**
  - **npn (MK13-22N-Ex0)**
- **Selectable NO/NC output function**

The MK13-22P-Ex0 and the MK13-22N-Ex0 are dual channel devices featuring intrinsically safe input circuits.
They can be connected to sensors conforming to EN 60947-5-6 (NAMUR), variable resistors or potential-free contacts.
Both transistor outputs are short-circuit protected and available in either
pnp (MK13-22P-Ex0) or
npn (MK13-22N-Ex0) versions.
The output function (normally open mode = switch position A / or normally closed mode = switch position R) of both channels is selected by a selector switch located on the front cover.
The input circuits are monitored for short-circuit and wire-break. Monitoring can be deactivated using the front side switch.

If input circuit monitoring is not required, the switching amplifiers MK1-22P-Ex0 or MK1-22N-Ex0 should be used alternatively.

When using mechanical contacts as input devices, shunt resistors must be connected to the contacts (see next page for contact configuration).

The green LED indicates that the device is powered. Both dual colour LEDs indicate the switching status (yellow) of the respective output. When the input circuit monitoring feature is activated, red illuminates to indicate a fault condition in the input circuit and the transistor output is disabled.

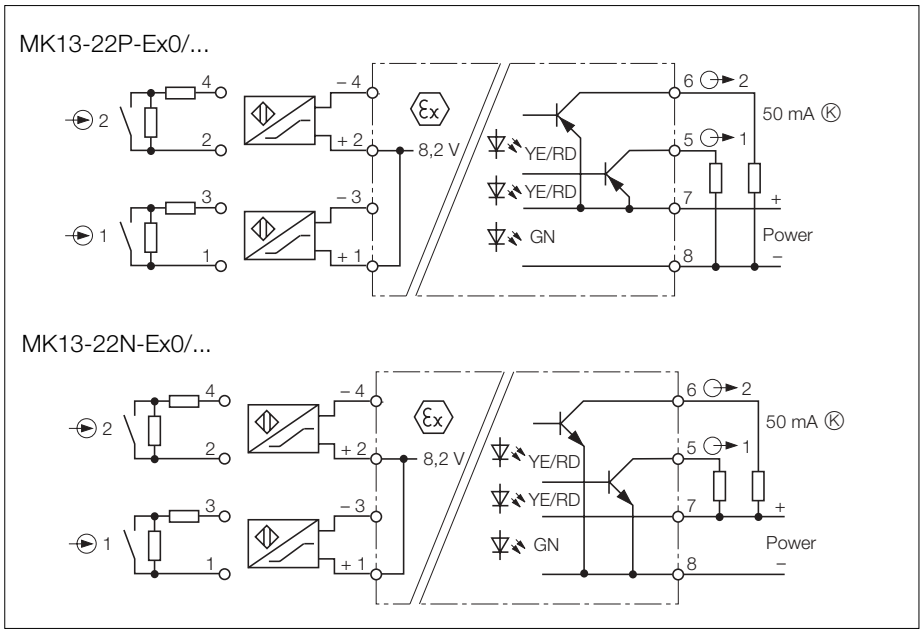

Isolating Switching Amplifier MK13-22P-Ex0/MK13-22N-Ex0

Type	MK13-22P-Ex0/24VDC	MK13-22N-Ex0/24VDC
Ident-no.	7542111	7542110
Supply voltage U_B	19...29 VDC	19...29 VDC
Ripple W_{PP}	≤ 10 %	≤ 10 %
Current consumption	approx. 50 mA	approx. 50 mA
Galvanic isolation	between input circuit, output circuit and supply voltage for 250 V_{rms}, test voltage 2.5 kV_{rms}	between input circuit, output circuit and supply voltage for 250 V_{rms}, test voltage 2.5 kV_{rms}
Input circuits	according to EN 60947-5-6 (NAMUR), intrinsically safe according to EN 50020	according to EN 60947-5-6 (NAMUR), intrinsically safe according to EN 50020
Operating characteristics		
– Voltage	8.2 V	8.2 V
– Current	8.2 mA	8.2 mA
Switching threshold	1.55 mA	1.55 mA
Hysteresis	typ. 0.2 mA	typ. 0.2 mA
Wire-break threshold	≤ 0.1 mA	≤ 0.1 mA
Short-circuit threshold	≥ 6 mA	≥ 6 mA
Contact configuration Of mechanical switches with active input circuit monitoring function	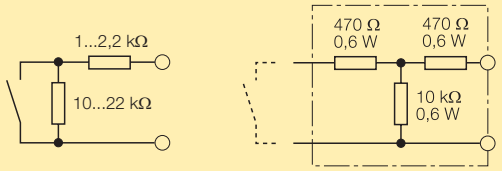	resistor module WM1, ident-no. 0912101
Output circuits	pnp transistor outputs	npn transistor outputs
Voltage drop	≤ 1.7 V	≤ 1.7 V
Switching current output	≤ 50 mA, short-circuit protected	≤ 50 mA, short-circuit protected
Switching frequency	≤ 3 kHz	≤ 3 kHz
Ex-approval acc. to certificate of conformity	TÜV 03 ATEX 2235	TÜV 03 ATEX 2235
Maximum nominal values		
– No load voltage U_0	≤ 9.9 V	≤ 9.9 V
– Short-circuit current I_0	≤ 12 mA	≤ 12 mA
– Power P_0	≤ 30 mW	≤ 30 mW
Max. external inductances/capacitances L_0/C_0		
– [EEx ia] IIC	2/10/20 mH/5/3.6/3.2 µF	1/5/10 mH/1.1/0.79/0.7 µF
– [EEx ib] IIC	1/5/10 mH/1.1/0.79/0.7 µF	1.7 µF/23 mH
Marking of device	II (1) GD [EEx ia] IIC	II (1) GD [EEx ia] IIC
LED indications		
– Power	green	green
– Switching status/fault indication	2 x yellow/red (2-colour LED)	2 x yellow/red (2-colour LED)
Housing	8-pole, 18 mm wide, Polycarbonate/ABS, flammability class V-0 per UL 94	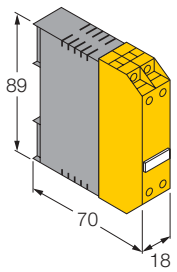
Mounting	snap-on clamps for top-hat rail (DIN 50022) or screw terminals for panel mounting	
Connection	via flat terminals with self-lifting pressure plates	
Connection profile	≤ 2 x 2.5 mm² or 2 x 1.5 mm² with wire sleeves	
Degree of protection (IEC 60529/EN 60529)	IP20	
Operating temperature	-25…+70 °C	

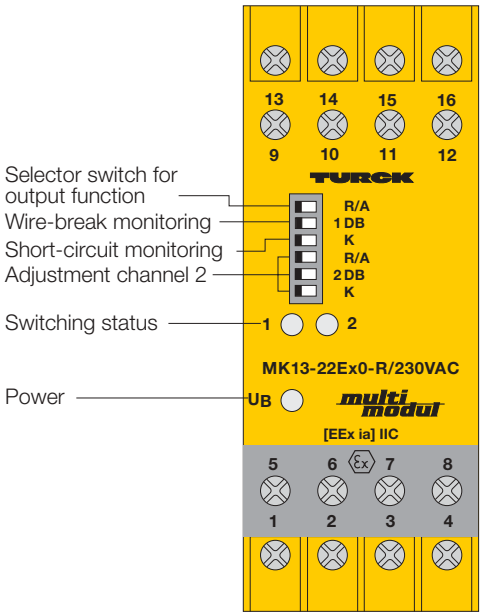

Isolating Switching Amplifier MK13-22Ex0-R/24VDC MK13-22Ex0-R/230VAC 2-channel

1

- **2-channel isolating switching amplifier**
- **Intrinsically safe input circuit EEx ia**
- **Area of application according to ATEX: II (1) G**
- **Galvanic isolation between input circuits, output circuits and supply voltage**
- **Input circuit monitoring for wire-break and short-circuit (can be disabled)**
- **2 relay outputs, each with one SPDT contact**
- **Selectable NO/NC output function**

The MK13-22Ex0-R type switching amplifiers are dual channel devices featuring intrinsically safe input circuits. They can be connected to sensors according to EN 60947-5-6 (NAMUR), variable resistors or potential-free contacts. The output cicuits each feature a relay output with SPDT contact.

Six front panel programming switches select the output function of each channel (normally open mode = switch position A/ or normally closed mode = switch position R) and enable separate activation and de-activation of wire-break (switch position DB) and short-circuit (switch position K) monitoring of each channel.
When using mechanical contacts as the input device, wire-break and short-circuit monitoring must be disabled or shunt resistors must be connected to the contacts (II). (See next page for contact configuration).

The green LED indicates that the device is powered. The two dual colour LEDs indicate the switching status (yellow) as well as fault conditions (red). When the input circuit monitoring feature is activated, red illuminates to indicate a fault condition in the input circuit and the respective output relay is de-energised.

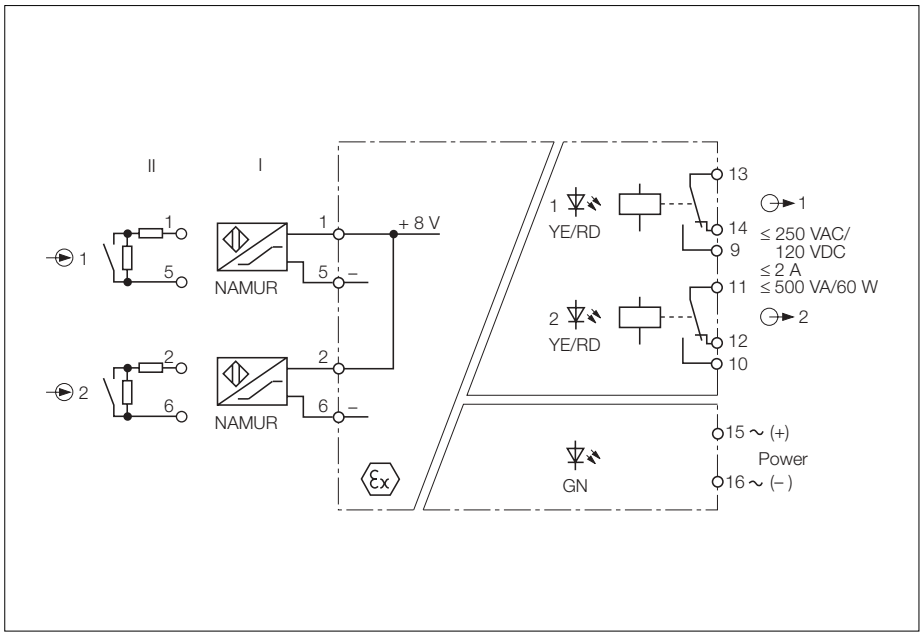

Isolating Switching Amplifier MK13-22Ex0-R

Type	MK13-22Ex0-R/230VAC	MK13-22Ex0-R/24VDC
Ident-no.	7541120	7541127
Supply voltage U_B	196...253 VAC	10...30 VDC
Line frequency/ripple W_{PP}	48...62 Hz	≤ 10 %
Power/current consumption	≤ 30 mA_{rms}	≤ 1.5 W
Galvanic isolation	between input circuit, output circuit and supply voltage for 250 V_{rms}, test voltage 2.5 kV_{rms}	between input circuit, output circuit and supply voltage for 250 V_{rms}, test voltage 2.5 kV_{rms}
Input circuits	according to EN 60947-5-6 (NAMUR), intrinsically safe according to EN 50020	according to EN 60947-5-6 (NAMUR), intrinsically safe according to EN 50020
Operating characteristics		
– Voltage	8 V	8 V
– Current	8 mA	8 mA
Switching threshold	1.55 mA	1.55 mA
Hysteresis	typ. 0.2 mA	typ. 0.2 mA
Wire-break threshold	≤ 0.1 mA	≤ 0.1 mA
Short-circuit threshold	≥ 6.0 mA	≥ 6.0 mA
Contact configuration Of mechanical switches with active input circuit monitoring function	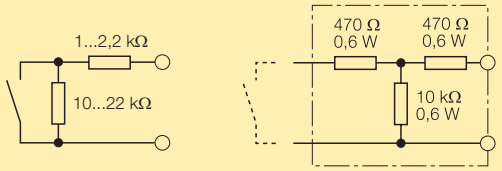	resistor module WM1, ident-no. 0912101
Output circuits	2 relay outputs (SPDT)	2 relay outputs (SPDT)
Switching voltage	≤ 250 VAC/120 VDC	≤ 250 VAC/120 VDC
Switching current per output	≤ 2 A	≤ 2 A
Switching capacity per output	≤ 500 VA/60 W	≤ 500 VA/60 W
Switching frequency	≤ 10 Hz	≤ 10 Hz
Contact material	silver-alloy + 3 µm Au	silver-alloy + 3 µm Au
Ex-approval acc. to certificate of conformity	PTB 99 ATEX 2083	PTB 99 ATEX 2083
Maximum nominal values		
– No load voltage U_0	≤ 11.9 V	≤ 11.9 V
– Short-circuit current I_0	≤ 36 mA	≤ 36 mA
Max. external inductances/capacitances L_0/C_0		
– [EEx ia] IIB	87 mH/9.4 µF	87 mH/9.4 µF
– [EEx ia] IIC	23 mH/1.45 µF	23 mH/1.45 µF
Marking of devices	II (1) G [EEx ia] IIC	II (1) G [EEx ia] IIC
LED indications		
– Power	green	green
– Switching status/fault indication	2 x yellow/red (2-colour LED)	2 x yellow/red (2-colour LED)
Housing	16-pole, 36 mm wide, Polycarbonate/ABS, flammability class V-0 per UL 94	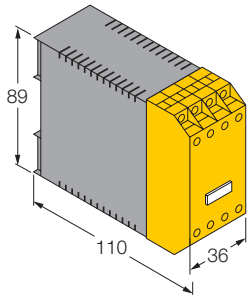
Mounting	snap-on clamps for top-hat rail (DIN 50022) or screw terminals for panel mounting	
Connection	via flat terminals with self-lifting pressure plates	
Connection profile	≤ 2 x 2.5 mm^2 or 2 x 1.5 mm^2 with wire sleeves	
Degree of protection (IEC 60529/EN 60529)	IP20	
Operating temperature	-25…+60 °C	

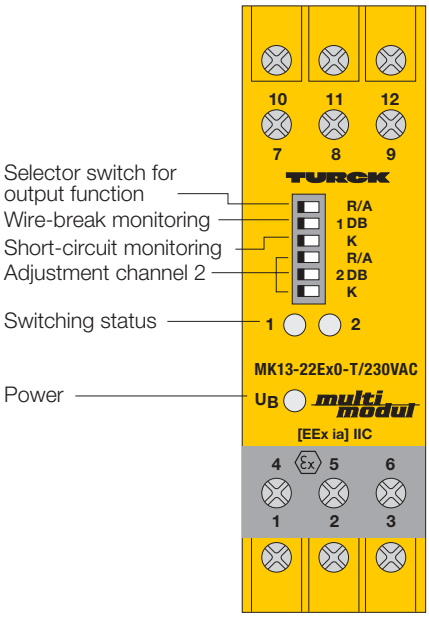

Isolating Switching Amplifier MK13-22Ex0-T/24VDC MK13-22Ex0-T/230VAC 2-channel

1

- **2-channel isolating switching amplifier**
- **Intrinsically safe input circuit EEx ia**
- **Area of application according to ATEX: II (1) GD**
- **Galvanic isolation between input circuits, output circuits and supply voltage**
- **Input circuit monitoring for wire-break and short-circuit (can be disabled)**
- **2 isolated, short-circuit and reverse polarity protected transistor outputs**
- **Selectable NO/NC output function**

The MK13-22Ex0-T type switching amplifiers are dual channel devices featuring intrinsically safe input circuits. They can be connected to sensors according to EN 60947-5-6 (NAMUR), variable resistors or potential-free contacts.

Each channel is equipped with a potential free, short-circuit protected and reverse polarity protected transistor output.

Six front panel programming switches select the output function of each channel (normally open mode = switch position A/ or normally closed mode = switch position R) and enable separate activation and de-activation of wire-break (switch position DB) and short-circuit (switch position K) monitoring of each channel.

When using mechanical contacts as the input device, wire-break and short-circuit monitoring must be disabled or shunt resistors must be connected to the contacts (II). (See next page for contact configuration).

The green LED indicates that the device is powered. The two dual colour LEDs indicate the switching status (yellow) as well as fault conditions (red). When the input circuit monitoring feature is activated, red illuminates to indicate a fault in the input circuit and the respective transistor output is disabled.

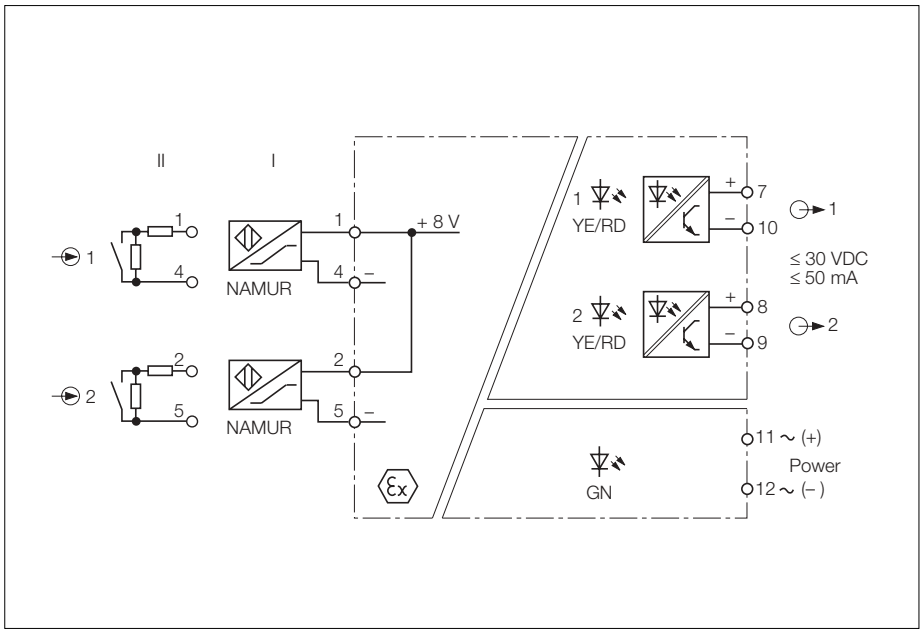

Isolating Switching Amplifier MK13-22Ex0-T

Type	MK13-22Ex0-T/230VAC	MK13-22Ex0-T/24VDC
Ident-no.	7542120	7542127
Supply voltage U_B	196...253 VAC	10...30 VDC
Line frequency/ripple W_{PP}	48...62 Hz	≤ 10 %
Power/current consumption	≤ 30 mA_{rms}	≤ 1.2 W
Galvanic isolation	between input circuit, output circuit and supply voltage for 250 V_{rms}, test voltage 2.5 kV_{rms}	between input circuit, output circuit and supply voltage for 250 V_{rms}, test voltage 2.5 kV_{rms}
Input circuits	according to EN 60947-5-6 (NAMUR), intrinsically safe according to EN 50020	according to EN 60947-5-6 (NAMUR), intrinsically safe according to EN 50020
Operating characteristics		
– Voltage	8 V	8 V
– Current	8 mA	8 mA
Switching threshold	1.55 mA	1.55 mA
Hysteresis	typ. 0.2 mA	typ. 0.2 mA
Wire-break threshold	≤ 0.1 mA	≤ 0.1 mA
Short-circuit threshold	≥ 6.0 mA	≥ 6.0 mA
Contact configuration Of mechanical switches with active input circuit monitoring function	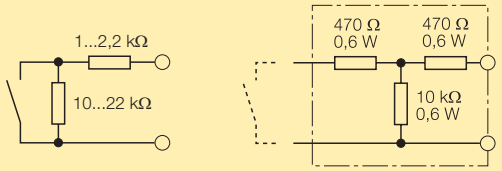	resistor module WM1, ident-no. 0912101
Output circuits	2 transistor outputs potential-free, short-circuit protected	2 transistor outputs potential-free, short-circuit protected
Switching voltage	≤ 30 VDC	≤ 30 VDC
Switching current per output	≤ 50 mA	≤ 50 mA
Switching frequency	≤ 3 kHz	≤ 3 kHz
Voltage drop	≤ 2.5 V	≤ 2.5 V
Ex-approval acc. to certificate of conformity	PTB 99 ATEX 2083	PTB 99 ATEX 2083
Maximum nominal values		
– No load voltage U_0	≤ 11.9 V	≤ 11.9 V
– Short-circuit current I_0	≤ 36 mA	≤ 36 mA
Max. external inductances/capacitances L_0/C_0		
– [EEx ia] IIB	87 mH/9.4 µF	87 mH/9.4 µF
– [EEx ia] IIC	23 mH/1.45 µF	23 mH/1.45 µF
Marking of devices	II (1) G [EEx ia] IIC	II (1) G [EEx ia] IIC
LED indications		
– Power	green	green
– Switching status/fault indication	2 x yellow/red (2-colour LED)	2 x yellow/red (2-colour LED)
Housing	12-pole, 27 mm wide, Polycarbonate/ABS, flammability class V-0 per UL 94	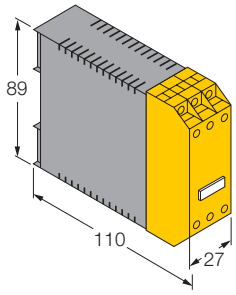
Mounting	snap-on clamps for top-hat rail (DIN 50022) or screw terminals for panel mounting	
Connection	via flat terminals with self-lifting pressure plates	
Connection profile	≤ 2 x 2.5 mm^2 or 2 x 1.5 mm^2 with wire sleeves	
Degree of protection (IEC 60529/EN 60529)	IP20	
Operating temperature	-25…+60 °C	

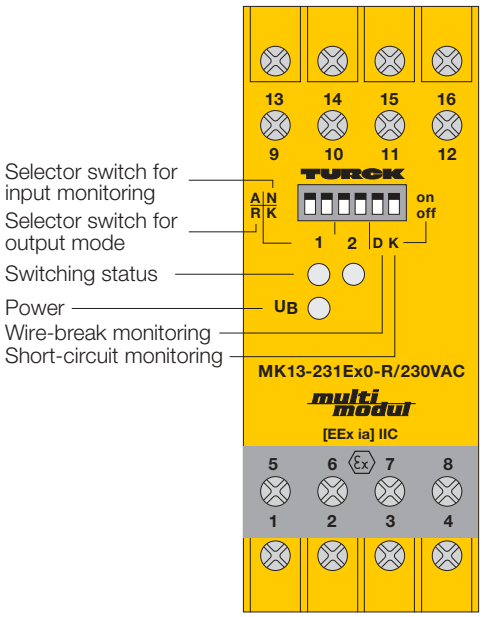

Isolating Switching Amplifier MK13-231Ex0-R/24VDC MK13-231Ex0-R/230VAC 2-channel

1

- **2-channel isolating switching amplifier with common alarm output**
- **Intrinsically safe input circuits EEx ia**
- **Area of application according to ATEX: II (1) G**
- **Galvanic isolation between input circuits, output circuits and supply voltage**
- **Input circuit monitoring for wire-break and short-circuit (can be disabled)**
- **3 relay outputs with one NO contact each**
- **Selectable NO/NC output function**

The isolating switching amplifiers type MK13-231Ex0-R are dual channel devices featuring intrinsically safe input circuits. They can be connected to sensors according to EN 60947-5-6 (NAMUR), variable resistors or potential-free contacts. The output circuits each feature a relay with a NO contact. The device also avails of a common alarm output.

Six front panel programming switches select the output function of each channel (normally open mode = switch position A, or normally closed mode = switch position R). The input circuit monitoring function can be activated for all channels (switch position N).

In this position it is possible to enable and disable wire-break (switch D) and short-circuit (switch K) monitoring separately.

When using mechanical contacts as the input device, input circuit monitoring must be disabled (switch position K), or shunt resistors must be connected to the contacts (II). (See next page for contact configuration).

The green LED indicates that the device is powered. The dual colour LED indicates the switching status (yellow) as well as fault conditions (red). If the input circuit monitoring feature is activated, red illuminates to indicate a fault condition in the input circuit and the corresponding output relay and alarm relay de-energise.

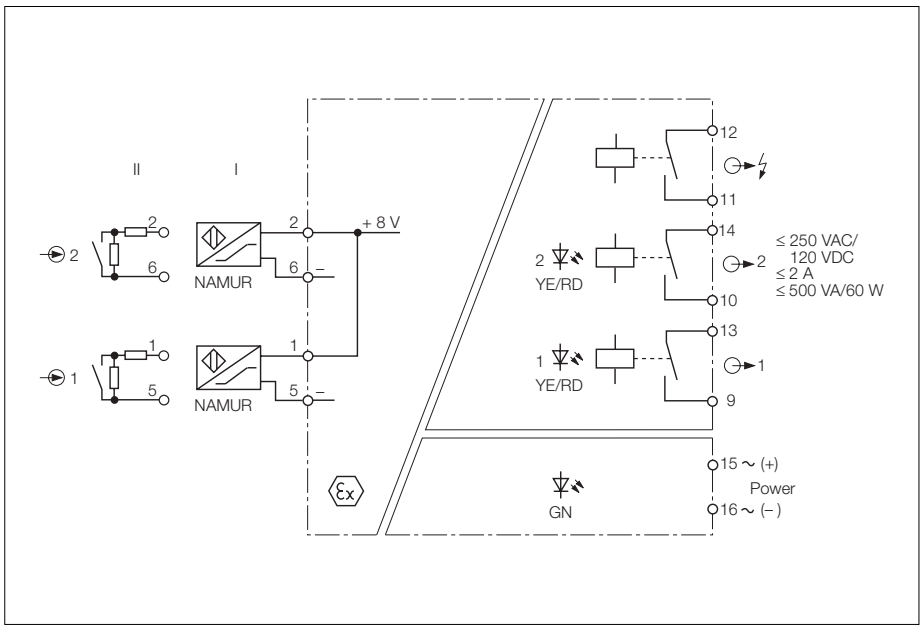

Isolating Switching Amplifier MK13-231Ex0-R

Type	MK13-231Ex0-R/230VAC	MK13-231Ex0-R/24VDC
Ident-no.	7541130	7541137
Supply voltage U_B	195.5...253 VAC	10...30 VDC
Line frequency/ripple W_{PP}	48...62 Hz	≤ 10 %
Power/current consumption	≤ 3 VA	≤ 2 W
Galvanic isolation	between input circuit, output circuit and supply voltage for 250 V_{rms}, test voltage 2.5 kV_{rms}	between input circuit, output circuit and supply voltage for 250 V_{rms}, test voltage 2.5 kV_{rms}
Input circuits	according to EN 60947-5-6 (NAMUR), intrinsically safe according to EN 50020	according to EN 60947-5-6 (NAMUR), intrinsically safe according to EN 50020
Operating characteristics		
– Voltage	8 V	8 V
– Current	8 mA	8 mA
Switching threshold	1.55 mA	1.55 mA
Hysteresis	typ. 0.2 mA	typ. 0.2 mA
Wire-break threshold	≤ 0.1 mA	≤ 0.1 mA
Short-circuit threshold	≥ 6 mA	≥ 6 mA
Contact configuration Of mechanical switches with active input circuit monitoring function	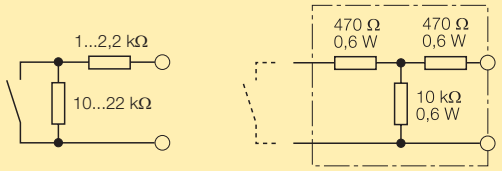	resistor module WM1, ident-no. 0912101
Output circuits	3 relay outputs (NO)	3 relay outputs (NO)
Switching voltage	≤ 250 V	≤ 250 V
Switching current per output	≤ 2 A	≤ 2 A
Switching capacity per output	≤ 500 VA/60 W	≤ 500 VA/60 W
Switching frequency	≤ 10 Hz	≤ 10 Hz
Contact material	silver-alloy + 3 µm Au	silver-alloy + 3 µm Au
Ex-approval acc. to certificate of conformity	PTB 99 ATEX 2084	PTB 99 ATEX 2084
Maximum nominal values		
– No load voltage U_0	≤ 11.5 V	≤ 11.5 V
– Short-circuit current I_0	≤ 51.2 mA	≤ 51.2 mA
Max. external inductances/capacitances L_0/C_0		
– [EEx ia] IIB	55 mH/11.2 µF	55 mH/11.2 µF
– [EEx ia] IIC	14 mH/1.64 µF	14 mH/1.64 µF
Marking of devices	II (1) G [EEx ia] IIC	II (1) G [EEx ia] IIC
LED indications		
– Power	green	green
– Switching status/fault indication	2 x yellow/red (2-colour LED)	2 x yellow/red (2-colour LED)
Housing	16-pole, 36 mm wide, Polycarbonate/ABS, flammability class V-0 per UL 94	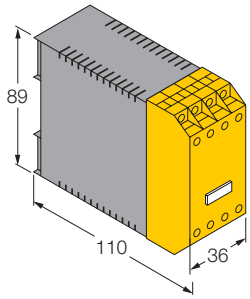
Mounting	snap-on clamps for top-hat rail (DIN 50022) or screw terminals for panel mounting	
Connection	via flat terminals with self-lifting pressure plates	
Connection profile	≤ 2 x 2.5 mm² or 2 x 1.5 mm² with wire sleeves	
Degree of protection (IEC 60529/EN 60529)	IP20	
Operating temperature	-25…+60 °C	

 Hans Turck GmbH & Co.KG • D–45466 Mülheim/Ruhr • Tel. 0208/4952-0 • Fax 0208/4952-264 • E-Mail: turckmh@mail.turck-globe.de • www.turck.com

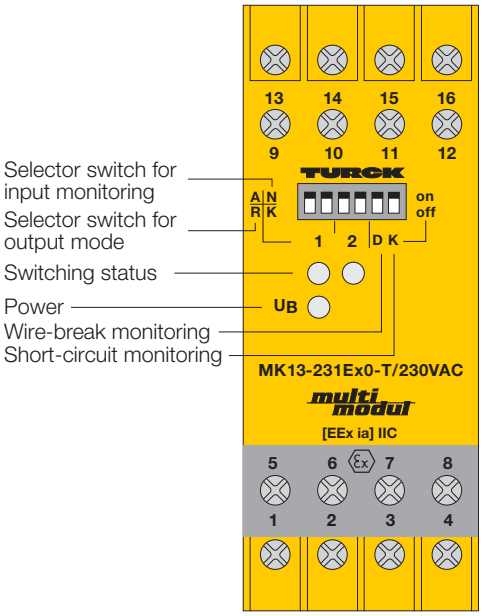

Isolating Switching Amplifier MK13-231Ex0-T/24VDC MK13-231Ex0-T/230VAC 2-channel

1

- **2-channel isolating switching amplifier with common alarm output**
- **Intrinsically safe input circuits EEx ia**
- **Area of application according to ATEX: II (1) G**
- **Galvanic isolation between input circuits, output circuits and supply voltage**
- **Input circuit monitoring for wire-break and short-circuit (can be disabled)**
- **3 isolated transistor outputs, short-circuit and reverse polarity protected**
- **Selectable NO/NC output function**

The isolating switching amplifiers type MK13-231Ex0-T are dual channel devices featuring intrinsically safe input circuits. They can be connected to sensors according to EN 60947-5-6 (NAMUR), variable resistors or potential-free contacts.

Each channel is equipped with an isolated, short-circuit and reverse polarity protected transistor output. The device also avails of a common alarm output.

Six front panel programming switches select the output function of each channel (normally open mode = switch position A, or normally closed mode = switch position R). The input circuit monitoring function can be activated for all channels (switch position N).

In this position it is possible to enable and disable wire-break (switch D) and short-circuit (switch K) monitoring separately.

When using mechanical contacts as the input device, input circuit monitoring must be disabled (switch position K), or shunt resistors must be connected to the contacts (II). (See next page for contact configuration).

The green LED indicates that the device is powered. The dual colour LED indicates the switching status (yellow) as well as fault conditions (red). If the input circuit monitoring feature is activated, red illuminates to indicate a fault condition in the input circuit and the corresponding transistor output and common alarm output are disabled.

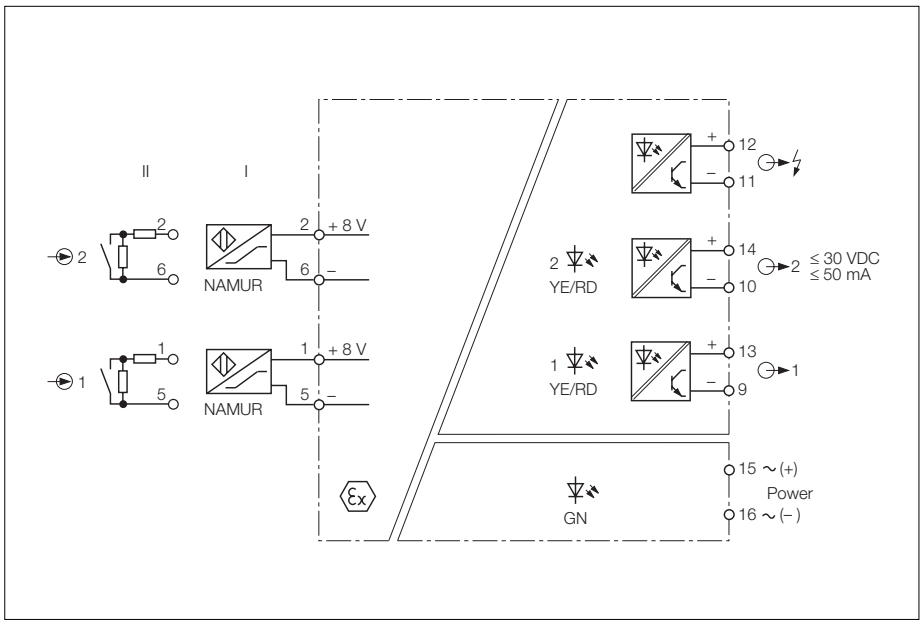

Isolating Switching Amplifier MK13-231Ex0-T

Type	MK13-231Ex0-T/230VAC	MK13-231Ex0-T/24VDC
Ident-no.	7542130	7542137
Supply voltage U_B	196...253 VAC	10...30 VDC
Line frequency/ripple W_{PP}	48...62 Hz	≤ 10 %
Power/current consumption	≤ 3 VA	≤ 2 W
Galvanic isolation	between input circuit, output circuit and supply voltage for 250 V_{rms}, test voltage 2.5 kV_{rms}	between input circuit, output circuit and supply voltage for 250 V_{rms}, test voltage 2.5 kV_{rms}
Input circuits	according to EN 60947-5-6 (NAMUR), intrinsically safe according to EN 50020	according to EN 60947-5-6 (NAMUR), intrinsically safe according to EN 50020
Operating characteristics		
– Voltage	8 V	8 V
– Current	8 mA	8 mA
Switching threshold	1.55 mA	1.55 mA
Hysteresis	typ. 0.2 mA	typ. 0.2 mA
Wire-break threshold	≤ 0.1 mA	≤ 0.1 mA
Short-circuit threshold	≥ 6.0 mA	≥ 6.0 mA
Contact configuration Of mechanical switches with active input circuit monitoring function	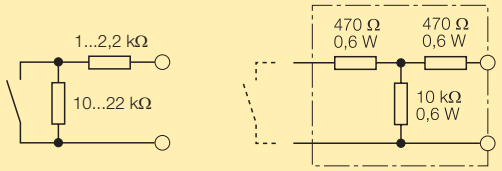	resistor module WM1, ident-no. 0912101
Output circuits	3 transistor outputs, potential-free, short-circuit protected	3 transistor outputs, potential-free, short-circuit protected
Switching voltage	≤ 30 VDC	≤ 30 VDC
Switching current per output	≤ 50 mA	≤ 50 mA
Switching frequency	≤ 3 kHz	≤ 3 kHz
Voltage drop	≤ 2.5 V	≤ 2.5 V
Ex-approval acc. to certificate of conformity	PTB 99 ATEX 2084	PTB 99 ATEX 2084
Maximum nominal values		
– No load voltage U_0	≤ 14 V	≤ 14 V
– Short-circuit current I_0	≤ 22 mA	≤ 22 mA
Max. external inductances/capacitances L_0/C_0		
– [EEx ia] IIB	55 mH/11.2 µF	55 mH/11.2 µF
– [EEx ia] IIC	14 mH/1.64 µF	14 mH/1.64 µF
Marking of devices	II (1) G [EEx ia] IIC	II (1) G [EEx ia] IIC
LED indications		
– Power	green	green
– Switching status/fault indication	2 x yellow/red (2-colour LED)	2 x yellow/red (2-colour LED)
Housing	16-pole, 36 mm wide, Polycarbonate/ABS, flammability class V-0 per UL 94	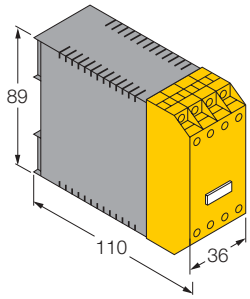
Mounting	snap-on clamps for top-hat rail (DIN 50022) or screw terminals for panel mounting	
Connection	via flat terminals with self-lifting pressure plates	
Connection profile	≤ 2 x 2.5 mm² or 2 x 1.5 mm² with wire sleeves	
Degree of protection (IEC 60529/EN 60529)	IP20	
Operating temperature	-25…+60 °C	

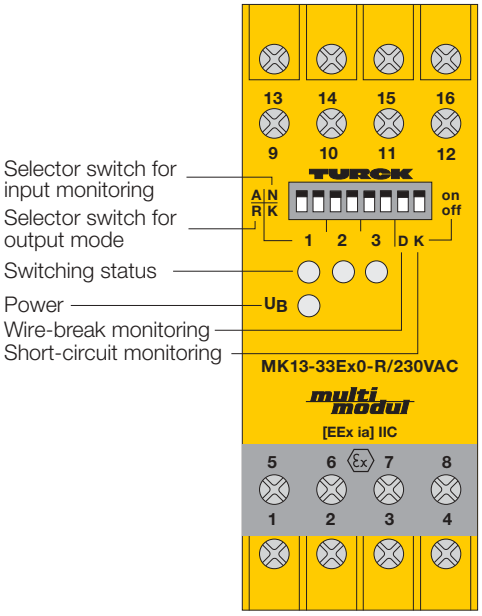

Isolating Switching Amplifier MK13-33Ex0-R/24VDC MK13-33Ex0-R/230VAC 3-channel

1

- **3-channel isolating switching amplifier**
- **Intrinsically safe input circuits EEx ia**
- **Area of application according to ATEX: II (1) G**
- **Galvanic isolation between input circuits, output circuits and supply voltage**
- **Input circuit monitoring for wire-break and short-circuit (can be disabled)**
- **3 relay outputs, each with one NO contact**
- **Selectable NO/NC output function**

The MK13-33Ex0-R switching amplifiers are 3-channel devices featuring intrinsically safe input circuits. They can be connected to sensors according to EN 60947-5-6 (NAMUR), variable resistors or potential-free contacts. The output circuits each feature a relay with a NO contact.

Eight front panel programming switches select the output function of each channel (switch positions A and R represent normally open mode (NO) and normally closed (NC) mode, respectively) and enable input circuit monitoring.

Switches D (wire-break) and K (short-circuit) determine which of their conditions should be monitored for all channels with activated input circuit monitoring (switch position N).
When using mechanical contacts as the input device, input circuit monitoring must be disabled (switch position K) or shunt resistors must be connected to the contacts (II). (See next page for contact configuration).

The green LED on the front cover indicates that the device is powered.
The three dual colour LEDs indicate the switching status (yellow) as well as fault conditions (red). When the input circuit monitoring feature is activated, red illuminates to indicate a fault condition in the input circuit and the respective output relay is de-energised.

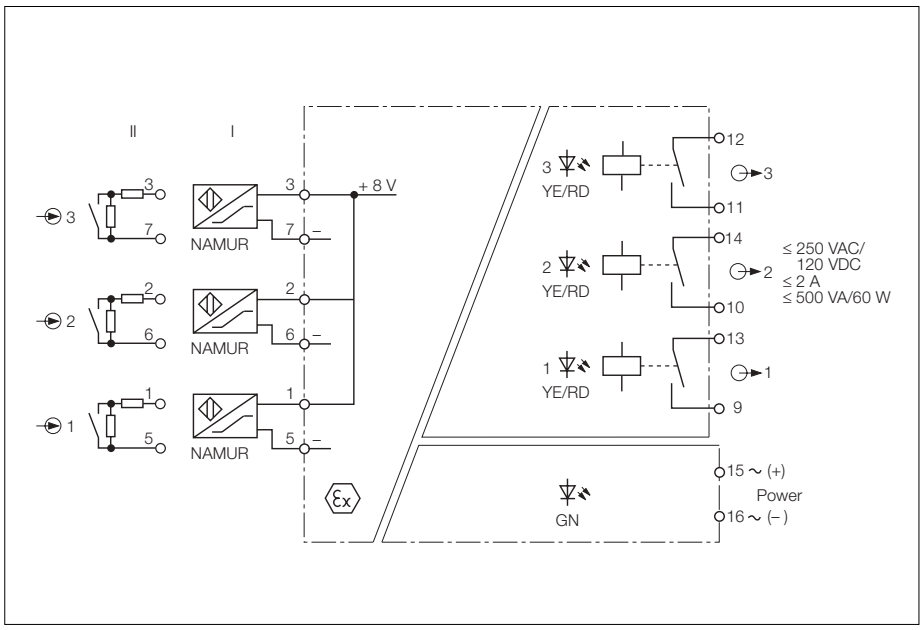

Isolating Switching Amplifier MK13-33Ex0-R

Type	MK13-33Ex0-R/230VAC	MK13-33Ex0-R/24VDC
Ident-no.	7541140	7541147
Supply voltage U_B	195.5...253 VAC	10...30 VDC
Line frequency/ripple W_{PP}	48...62 Hz	≤ 10 %
Power/current consumption	≤ 3 VA	≤ 2 W
Galvanic isolation	between input circuit, output circuit and supply voltage for 250 V_{rms}, test voltage 2.5 kV_{rms}	between input circuit, output circuit and supply voltage for 250 V_{rms}, test voltage 2.5 kV_{rms}
Input circuits	according to EN 60947-5-6 (NAMUR), intrinsically safe according to EN 50020	according to EN 60947-5-6 (NAMUR), intrinsically safe according to EN 50020
Operating characteristics		
– Voltage	8 V	8 V
– Current	8 mA	8 mA
Switching threshold	1.55 mA	1.55 mA
Hysteresis	typ. 0.2 mA	typ. 0.2 mA
Wire-break threshold	≤ 0.1 mA	≤ 0.1 mA
Short-circuit threshold	≥ 6 mA	≥ 6 mA
Contact configuration Of mechanical switches with active input circuit monitoring function	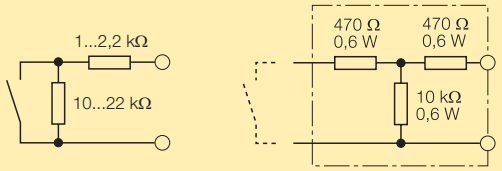	resistor module WM1, ident-no. 0912101
Output circuits	3 relay outputs (NO)	3 relay outputs (NO)
Switching voltage	≤ 250 V	≤ 250 V
Switching current per output	≤ 2 A	≤ 2 A
Switching capacity per output	≤ 500 VA/60 W	≤ 500 VA/60 W
Switching frequency	≤ 10 Hz	≤ 10 Hz
Contact material	silver-alloy + 3 µm Au	silver-alloy + 3 µm Au
Ex-approval acc. to certificate of conformity	PTB 99 ATEX 2084	PTB 99 ATEX 2084
Maximum nominal values		
– No load voltage U_0	≤ 11.5 V	≤ 11.5 V
– Short-circuit current I_0	≤ 51.2 mA	≤ 51.2 mA
Max. external inductances/capacitances L_0/C_0		
– [EEx ia/ib] IIC	1.64 µF/14 mH	1.64 µF/14 mH
– [EEx ia/ib] IIB	11.2 µF/55 mH	11.2 µF/55 mH
Marking of devices	II (1) G [EEx ia] IIC	II (1) G [EEx ia] IIC
LED indications		
– Power	green	green
– Switching status/fault indication	3 x yellow/red (2-colour LED)	3 x yellow/red (2-colour LED)
Housing	16-pole, 36 mm wide, Polycarbonate/ABS, flammability class V-0 per UL 94	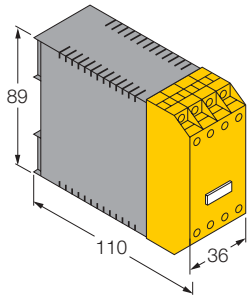
Mounting	snap-on clamps for top-hat rail (DIN 50022) or screw terminals for panel mounting	
Connection	via flat terminals with self-lifting pressure plates	
Connection profile	≤ 2 x 2.5 mm² or 2 x 1.5 mm² with wire sleeves	
Degree of protection (IEC 60529/EN 60529)	IP20	
Operating temperature	-25…+60 °C	

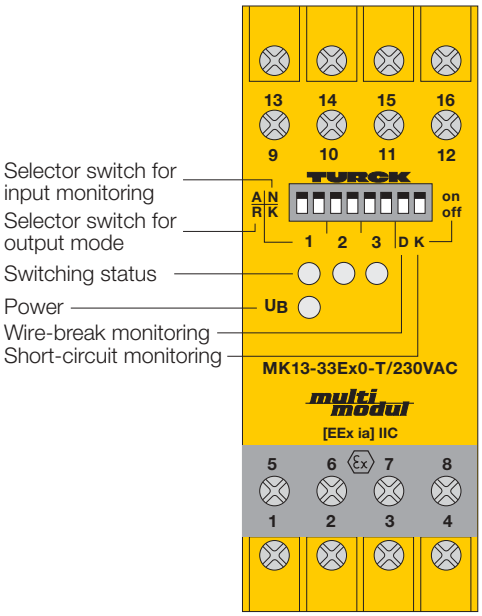

Isolating Switching Amplifier MK13-33Ex0-T/24VDC MK13-33Ex0-T/230VAC 3-channel

1

- **3-channel isolating switching amplifier**
- **Intrinsically safe input circuits EEx ia**
- **Area of application according to ATEX: II (1) G**
- **Galvanic isolation between input circuits, output circuits and supply voltage**
- **Input circuit monitoring for wire-break and short-circuit (can be disabled)**
- **3 isolated, short-circuit and reverse polarity protected transistor outputs**
- **Selectable NO/NC output function**

The MK13-33Ex0-T type switching amplifiers are 3-channel devices featuring intrinsically safe input circuits. They can be connected to sensors according to EN 60947-5-6 (NAMUR), variable resistors or potential-free contacts.

Each channel has one isolated, short-circuit and reverse polarity protected transistor output.

Eight front panel programming switches select the output function of each channel (switch positions A and R represent normally open mode (NO) and normally closed (NC) mode, respectively) and enable input circuit monitoring.

Switches D (wire-break) and K (short-circuit) determine which of their conditions should be monitored for all channels with activated input circuit monitoring (switch position N).

When using mechanical contacts as the input device, input circuit monitoring must be disabled (switch position K) or shunt resistors must be connected to the contacts (II). (See next page for contact configuration).

The green LED on the front cover indicates that the device is powered. The three dual colour LEDs indicate the switching status (yellow) as well as fault conditions (red). When the input circuit monitoring feature is activated, red illuminates to indicate a fault condition in the input circuit and the respective transistor output is disabled.

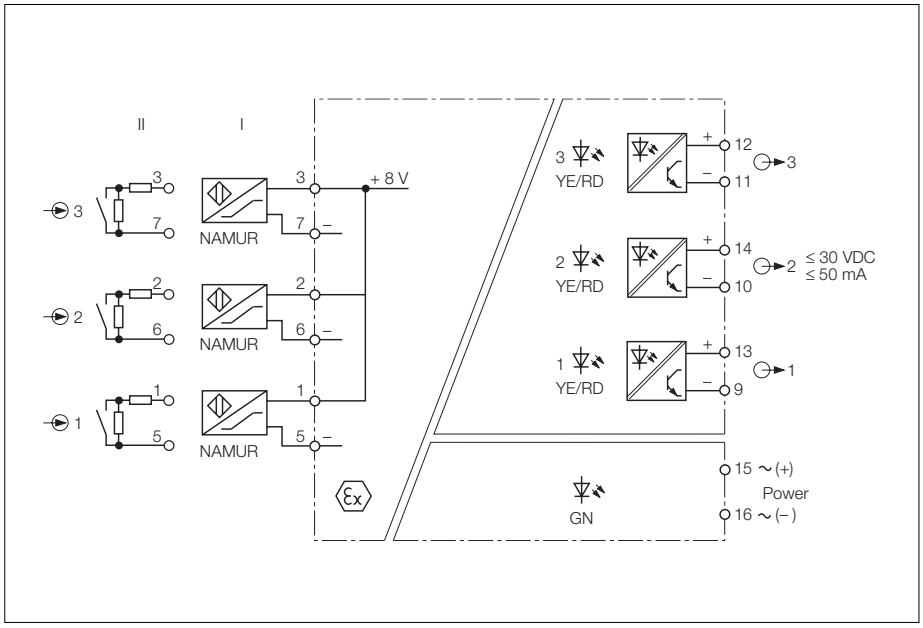

Isolating Switching Amplifier MK13-33Ex0-T

Type	MK13-33Ex0-T/230VAC	MK13-33Ex0-T/24VDC
Ident-no.	7542140	7542147
Supply voltage U_B	196...253 VAC	10...30 VDC
Line frequency/ripple W_{PP}	48...62 Hz	≤ 10 %
Power/current consumption	≤ 3 VA	≤ 2 W
Galvanic isolation	between input circuit, output circuit and supply voltage for 250 V_{rms}, test voltage 2.5 kV_{rms}	between input circuit, output circuit and supply voltage for 250 V_{rms}, test voltage 2.5 kV_{rms}
Input circuits	according to EN 60947-5-6 (NAMUR), intrinsically safe according to EN 50020	according to EN 60947-5-6 (NAMUR), intrinsically safe according to EN 50020
Operating characteristics		
– Voltage	8 V	8 V
– Current	8 mA	8 mA
Switching threshold	1.55 mA	1.55 mA
Hysteresis	typ. 0.2 mA	typ. 0.2 mA
Wire-break threshold	≤ 0.1 mA	≤ 0.1 mA
Short-circuit threshold	≥ 6.0 mA	≥ 6.0 mA
Contact configuration Of mechanical switches with active input circuit monitoring function	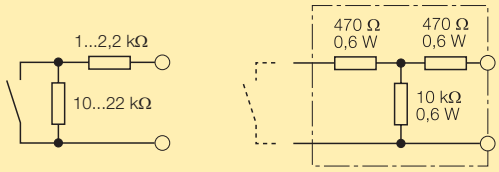	resistor module WM1, ident-no. 0912101
Output circuits	3 transistor outputs, potental-free, short-circuit protected	3 transistor outputs, potential-free, short-circuit protected
Switching voltage	≤ 30 VDC	≤ 30 VDC
Switching current per output	≤ 50 mA	≤ 50 mA
Switching frequency	≤ 3 kHz	≤ 3 kHz
Voltage drop	≤ 2.5 V	≤ 2.5 V
Ex-approval acc. to certificate of conformity	PTB 99 ATEX 2084	PTB 99 ATEX 2084
Maximum nominal values		
– No load voltage U_0	≤ 11.5 V	≤ 11.5 V
– Short-circuit current I_0	≤ 51.2 mA	≤ 51.2 mA
Max. external inductances/capacitances L_0/C_0		
– [EEx ia/ib] IIC	1.64 µF/14 mH	1.64 µF/14 mH
– [EEx ia/ib] IIB	11.2 µF/55 mH	11.2 µF/55 mH
Marking of devices	II (1) G [EEx ia] IIC	II (1) G [EEx ia] IIC
LED indications		
– Power	green	green
– Switching status/fault indication	3 x yellow/red (2-colour LED)	3 x yellow/red (2-colour LED)
Housing	16-pole, 36 mm wide, Polycarbonate/ABS, flammability class V-0 per UL 94	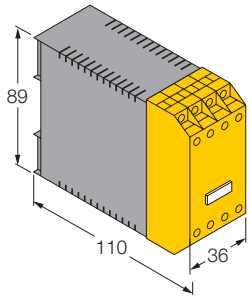
Mounting	snap-on clamps for top-hat rail (DIN 50022) or screw terminals for panel mounting	
Connection	via flat terminals with self-lifting pressure plates	
Connection profile	≤ 2 x 2.5 mm² or 2 x 1.5 mm² with wire sleeves	
Degree of protection (IEC 60529/EN 60529)	IP20	
Operating temperature	-25…+60 °C	

 Hans Turck GmbH & Co.KG • D–45466 Mülheim/Ruhr • Tel. 0208/4952-0 • Fax 0208/4952-264 • E-Mail: turckmh@mail.turck-globe.de • www.turck.com

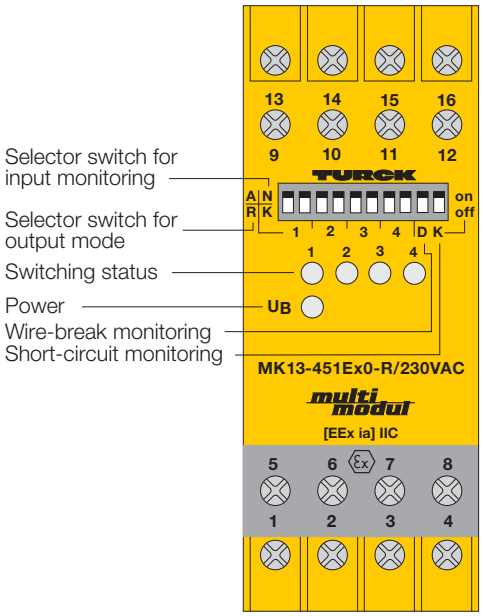

Isolating Switching Amplifier MK13-451Ex0-R/24VDC MK13-451Ex0-R/230VAC 4-channel

1

- **4-channel isolating switching amplifier with common alarm output**
- **Intrinsically safe input circuits EEx ia**
- **Area of application according to ATEX: II (1) G**
- **Galvanic isolation between input circuits, output circuits and supply voltage**
- **Input circuit monitoring for wire-break and short-circuit (can be disabled)**
- **5 relay outputs, each with one NO contact**
- **Selectable NO/NC output function**

The MK13-451Ex0-R type switching amplifiers are 4-channel devices featuring intrinsically safe input circuits. They can be connected to sensors according to EN 60947-5-6 (NAMUR), variable resistors or potential-free contacts. The output circuits each feature a relay with a NO contact. The device also avails of a common alarm output.

Ten front panel programming switches select the output function of each channel (switch positions A and R represent normally open mode (NO) and normally closed (NC) mode, respectively) and enable input circuit monitoring.

Switches D (wire-break) and K (short-circuit) determine which of their conditions should be monitored for all channels with activated input circuit monitoring (switch position N).
When using mechanical contacts as the input device, input circuit monitoring must be disabled (switch position K) or shunt resistors must be connected to the contacts (II). (See next page for contact configuration).

The green LED on the front cover indicates that the device is powered. The four dual colour LEDs indicate the switching status (yellow) as well as fault conditions (red). When the input circuit monitoring feature is activated, red illuminates to indicate a fault condition in the input circuit and the corresponding output relay and alarm output are de-energised.

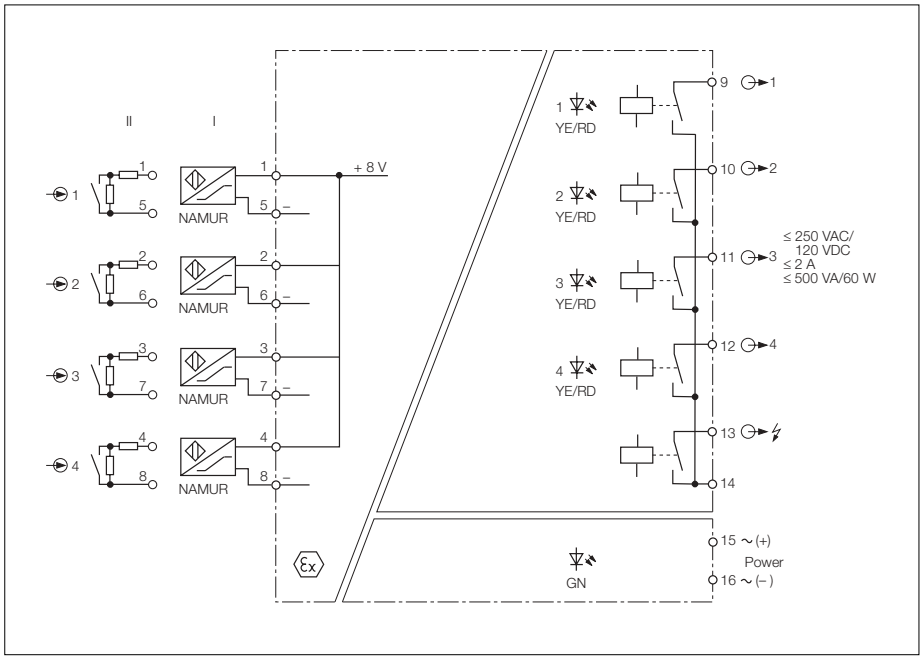

Isolating Switching Amplifier MK13-451Ex0-R

Type	MK13-451Ex0-R/230VAC	MK13-451Ex0-R/24VDC
Ident-no.	7411180	7541187
Supply voltage U_B	196...253 VAC	10...30 VDC
Line frequency/ripple W_{PP}	48...62 Hz	≤ 10 %
Power/current consumption	≤ 3 VA	≤ 2 W
Galvanic isolation	between input circuit, output circuit and supply voltage for 250 V_{rms}, test voltage 2.5 kV_{rms}	between input circuit, output circuit and supply voltage for 250 V_{rms}, test voltage 2.5 kV_{rms}
Input circuits	according to EN 60947-5-6 (NAMUR), intrinsically safe according to EN 50020	according to EN 60947-5-6 (NAMUR), intrinsically safe according to EN 50020
Operating characteristics		
– Voltage	8 V	8 V
– Current	8 mA	8 mA
Switching threshold	1.55 mA	1.55 mA
Hysteresis	typ. 0.2 mA	typ. 0.2 mA
Wire-break threshold	≤ 0.1 mA	≤ 0.1 mA
Short-circuit threshold	≥ 6.0 mA	≥ 6.0 mA
Contact configuration Of mechanical switches with active input circuit monitoring function	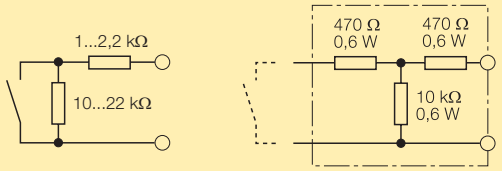	resistor module WM1, ident-no. 0912101
Output circuits	5 relay outputs (NO)	5 relay outputs (NO)
Switching voltage	≤ 250 VAC/120 VDC	≤ 250 VAC/120 VDC
Switching current per output	≤ 2 A	≤ 2 A
Switching capacity per output	≤ 500 VA/60 W	≤ 500 VA/60 W
Switching frequency	≤ 10 Hz	≤ 10 Hz
Contact material	silver-alloy + 3 µm Au	silver-alloy + 3 µm Au
Ex-approval acc. to certificate of conformity	PTB 99 ATEX 2084	PTB 99 ATEX 2084
Maximum nominal values		
– No load voltage U_0	≤ 11.5 V	≤ 11.5 V
– Short-circuit current I_0	≤ 51.2 mA	≤ 51.2 mA
Max. external inductances/capacitances L_0/C_0		
– [EEx ia/ib] IIC	1.64 µF/14 mH	1.64 µF/14 mH
– [EEx ia/ib] IIB	11.2 µF/55 mH	11.2 µF/55 mH
Marking of devices	II (1) G [EEx ia] IIC	II (1) G [EEx ia] IIC
LED indications		
– Power	green	green
– Switching status/fault indication	4 x yellow/red (2-colour LED)	4 x yellow/red (2-colour LED)
Housing	16-pole, 36 mm wide, Polycarbonate/ABS, flammability class V-0 per UL 94	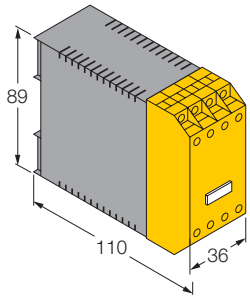
Mounting	snap-on clamps for top-hat rail (DIN 50022) or screw terminals for panel mounting	
Connection	via flat terminals with self-lifting pressure plates	
Connection profile	≤ 2 x 2.5 mm² or 2 x 1.5 mm² with wire sleeves	
Degree of protection (IEC 60529/EN 60529)	IP20	
Operating temperature	-25…+60 °C	

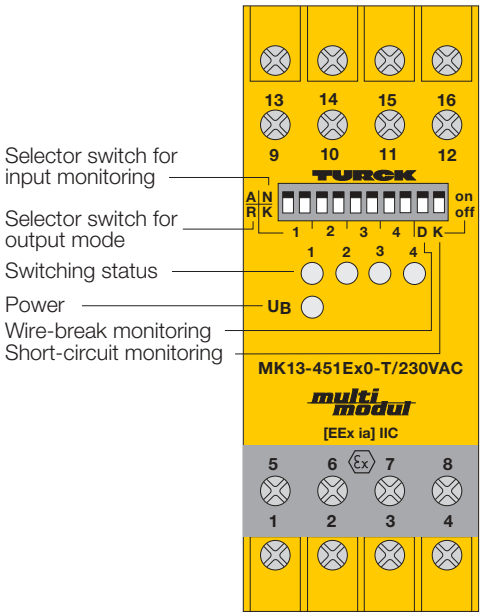

Isolating Switching Amplifier MK13-451Ex0-T/24VDC MK13-451Ex0-T/230VAC 4-channel

1

- **4-channel isolating switching amplifier with common alarm output**
- **Intrinsically safe input circuits EEx ia**
- **Area of application according to ATEX: II (1) GD**
- **Galvanic isolation between input circuits, output circuits and supply voltage**
- **Input circuit monitoring for wire-break and short-circuit (can be disabled)**
- **5 isolated, short-circuit and reverse polarity protected transistor outputs**
- **Selectable NO/NC output function**

The MK13-451Ex0-T type switching amplifiers are 4-channel devices featuring intrinsically safe input circuits. They can be connected to sensors according to EN 60947-5-6 (NAMUR), variable resistors or potential-free contacts.

The transistor outputs are short-circuit and reverse polarity protected. A positve voltage can be applied to the outputs via their common connection. The device also avails of a common alarm output.

Ten front panel programming switches select the output function of each channel (switch positions A and R represent normally open mode (NO) and normally closed (NC) mode, respectively) and enable input circuit monitoring.

Switches D (wire-break) and K (short-circuit) determine which of their conditions should be monitored for all channels with activated input circuit monitoring (switch position N). When using potential-free contacts as the input device, input circuit monitoring must be disabled (switch position K) or shunt resistors must be connected to the contacts (II). (See next page for contact configuration).

The green LED on the front cover indicates that the devices are powered. The four dual colour LEDs indicate the switching status (yellow) as well as fault conditions (red). When the input circuit monitoring feature is activated, red illuminates to indicate a fault condition in the input circuit and the respective transistor output and alarm output are disabled.

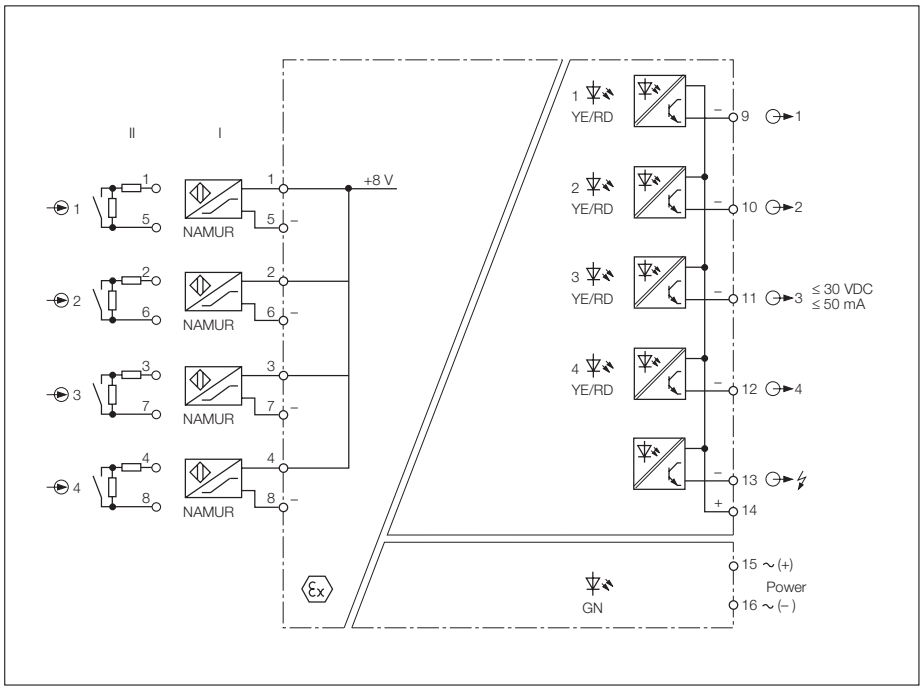

Isolating Switching Amplifier MK13-451Ex0-T

Type	MK13-451Ex0-T/230VAC	MK13-451Ex0-T/24VDC
Ident-no.	7542180	7542187
Supply voltage U_B	196...253 VAC	10...30 VDC
Line frequency/ripple W_{PP}	48...62 Hz	≤ 10 %
Power/current consumption	≤ 3 VA	≤ 2 W
Galvanic isolation	between input circuit, output circuit and supply voltage for 250 V_{rms}, test voltage 2.5 kV_{rms}	between input circuit, output circuit and supply voltage for 250 V_{rms}, test voltage 2.5 kV_{rms}
Input circuits	according to EN 60947-5-6 (NAMUR), intrinsically safe according to EN 50020	according to EN 60947-5-6 (NAMUR), intrinsically safe according to EN 50020
Operating characteristics		
– Voltage	8 V	8 V
– Current	8 mA	8 mA
Switching threshold	1.55 mA	1.55 mA
Hysteresis	typ. 0.2 mA	typ. 0.2 mA
Wire-break threshold	≤ 0.1 mA	≤ 0.1 mA
Short-circuit threshold	≥ 6.0 mA	≥ 6.0 mA
Contact configuration Of mechanical switches with active input circuit monitoring function	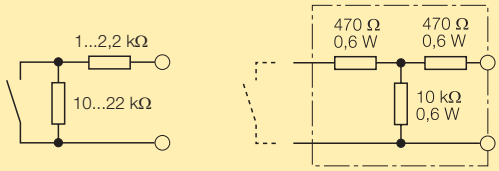	resistor module WM1, ident-no. 0912101
Output circuits	5 transistor outputs, potential-free, short-circuit protected	5 transistor outputs, potential-free, short-circuit protected
Switching voltage	≤ 30 VDC	≤ 30 VDC
Switching current per output	≤ 50 mA	≤ 50 mA
Switching frequency	≤ 3 kHz	≤ 3 kHz
Voltage drop	≤ 2.5 V	≤ 2.5 V
Ex-approval acc. to certificate of conformity	PTB 99 ATEX 2084	PTB 99 ATEX 2084
Maximum nominal values		
– No load voltage U_0	≤ 11.5 V	≤ 11.5 V
– Short-circuit current I_0	≤ 51.2 mA	≤ 51.2 mA
Max. external inductances/capacitances L_0/C_0		
– [EEx ia/ib] IIC	1.64 µF/14 mH	1.64 µF/14 mH
– [EEx ia/ib] IIB	11.2 µF/55 mH	11.2 µF/55 mH
Marking of devices	II (1) G [EEx ia] IIC	II (1) G [EEx ia] IIC
LED indications		
– Power	green	green
– Switching status/fault indication	4 x yellow/red (2-colour LED)	4 x yellow/red (2-colour LED)
Housing	16-pole, 36 mm wide, Polycarbonate/ABS, flammability class V-0 per UL 94	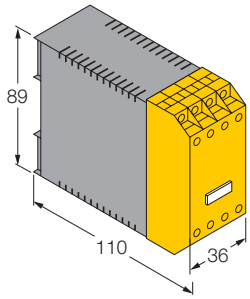
Mounting	snap-on clamps for top-hat rail (DIN 50022) or screw terminals for panel mounting	
Connection	via flat terminals with self-lifting pressure plates	
Connection profile	≤ 2 x 2.5 mm² or 2 x 1.5 mm² with wire sleeves	
Degree of protection (IEC 60529/EN 60529)	IP20	
Operating temperature	-25…+60 °C	

 Hans Turck GmbH & Co.KG • D–45466 Mülheim/Ruhr • Tel. 0208/4952-0 • Fax 0208/4952-264 • E-Mail: turckmh@mail.turck-globe.de • www.turck.com

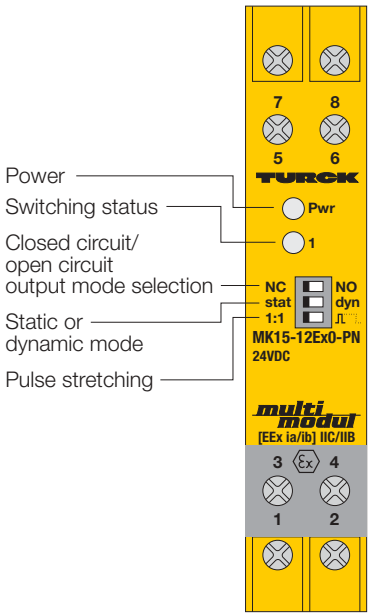

Isolating Switching Amplifier MK15-12Ex0-PN/24VDC 1-channel

1

- **1-channel isolating switching amplifier**
- **Intrinsically safe input circuits EEx ia/ib**
- **Area of application according to ATEX: II (1/2) GD**
- **Galvanic isolation between input circuit, output circuit and supply voltage**
- **Static and dynamic pulse processing**
- **Switching frequency up to 5 kHz**
- **Two transistor outputs, 1 npn and 1 pnp short-circuit protected**
- **Selectable NO/NC output function**

The MK15-12Ex0-PN/... is a single channel type special switching amplifier, particularly suited for transfer of high pulse frequencies (e. g. when used in scanning turbine rotation).

They can be connected to sensors according to EN 60947-5-6 (NAMUR), variable resistors or potential-free contacts.

The device is equipped with one short-circuit protected pnp transistor output and one short-circuit protected npn output transistor.

Three front panel programming switches set the channel function (normally open mode (NO) and normally closed (NC) mode), pulse expansion and the selection of pulse processing for the input signal (static or dynamic).

If pulse expansion is active, the output pulse is extended by 10 ms.

With static pulse processing, the NAMUR switching thresholds are scanned in a range of 0...5 kHz.

Dynamic pulse processing is to be used with sine and square wave input signals whose absolute value switching thresholds do not correspond to the NAMUR standard. A signal deviation (current change) of approx. 0.5 mA in an operating range of 1.5...3.5 mA switches the output.

The green LED on the front cover indicates that the devices are powered. The yellow LED indicates the switching status of the output (LED on – transistor conducting).

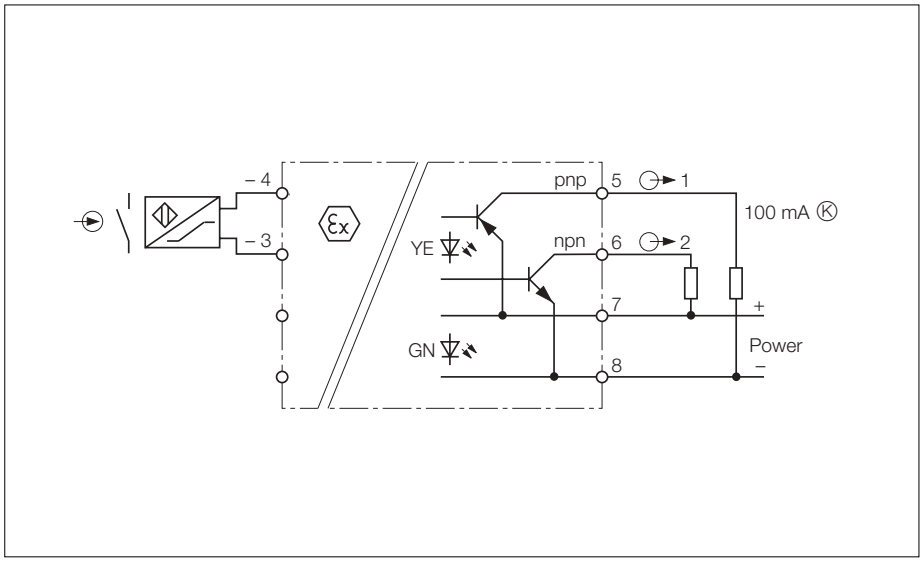

Isolating Switching Amplifier MK15-12Ex0-PN

Type	MK15-12Ex0-PN/24VDC
Ident-No.	7541316
Supply voltage U_B	10...30 VDC
Line frequency/ripple W_{PP}	≤ 10 %
Power/current consumption	approx. 20 mA
Galvanic isolation	between input circuit, output circuit and supply voltage for 250 V_{rms}, test voltage 2.5 kV_{rms}
Input circuits	according to EN 60947-5-6 (NAMUR), intrinsically safe according to EN 50020
Operating characteristics	
– Voltage	8.2 V
– Current	8.2 mA
Switching threshold (static)	1.55 mA
Hysteresis (static)	0.2 mA (typ.)
Output circuits	Two transistor outputs
Voltage drop output (5)	≤ 2.5 V
Voltage drop output (6)	≤ 2.5 V
Switching current output (5)	≤ 100 mA, short-circuit protected, pnp
Switching current output (6)	≤ 100 mA, short-circuit protected, npn
Switching frequency	≤ 5 kHz
Ex-approval acc. to certificate of conformity	TÜV 03 ATEX 2121
Maximum nominal values	
– No load voltage U_0	11.3 V
– Short-circuit current I_0	14 mA
– Power P_0	39 mW
– Internal resistance R_i	823 Ω
Characteristic	linear
Max. external inductances/capacitances L_0/C_0	
– [EEx ia] IIC	0.9 mH/710 nF / 1.9 mH/620 nF / 4.9 mH/530 nF
– [EEx ia] IIB	4.9 mH/2,7 µF
Internal inductance L_i	120 µH
Ambient temperature T_u	-25...+70 °C
Marking of device	II (1/2) GD [EEx ia/ib] IIC/IIB
LED indications	
– Switching status	yellow
– Power	green
Housing	8-pole, 18 mm wide, Polycarbonate/ABS, flammability class V-0 per UL 94
Mounting	snap-on clamps for top-hat rail (DIN 50022) or screw terminals for panel mounting
Connection	via flat terminals with self-lifting pressure plates
Connection profile	≤ 2 x 2.5 mm^2 or 2 x 1.5 mm^2 with wire sleeves
Degree of protection (IEC 60529/EN 60529)	IP20
Operating temperature	-25…+60 °C

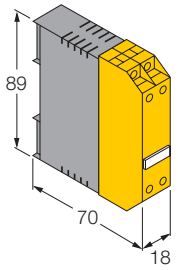

 Hans Turck GmbH & Co.KG • D–45466 Mülheim/Ruhr • Tel. 0208/4952-0 • Fax 0208/4952-264 • E-Mail: turckmh@mail.turck-globe.de • www.turck.com

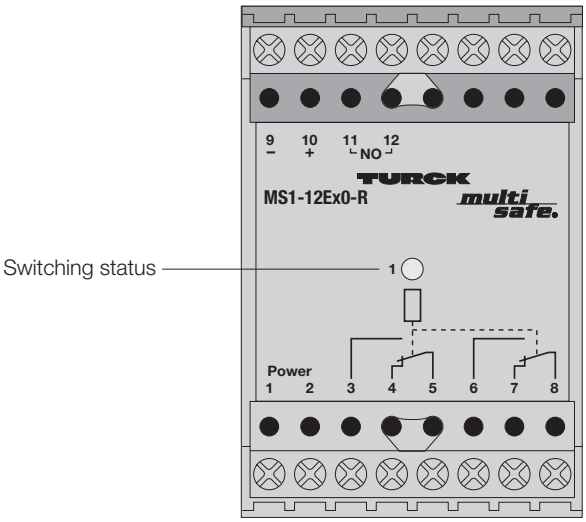

Isolating Switching Amplifier MS1-12Ex0-R 1-channel

- **1-channel isolating switching amplifier**
- **Intrinsically safe input circuit EEx ia**
- **Area of application according to ATEX: II (1) GD, I (M1)**
- **Galvanic isolation between input circuit, output circuit and supply voltage**
- **2 relay outputs, each with one SPDT contact**
- **Selectable NO/NC output function**
- **Universal supply voltage (20...250 VAC/20...125 VDC)**

The MS1-12Ex0-R is a single channel switching amplifier with an intrinsically safe input circuit. It can be connected to sensors according to EN 60947-5-6 (NAMUR), variable resistors or potential-free contacts. The output circuit has two relays with one SPDT contact each.

The output function is jumper programmable by linking terminals 11/12 for normally open mode (NO/A) or by leaving terminals 11/12 open for normally closed mode (NC/R).

This unit does not have input circuit monitoring. Therefore this device provides an inexpensive alternative in systems which use NAMUR sensors (I) or mechanical contacts (II).

The yellow LED indicates the status of the output.

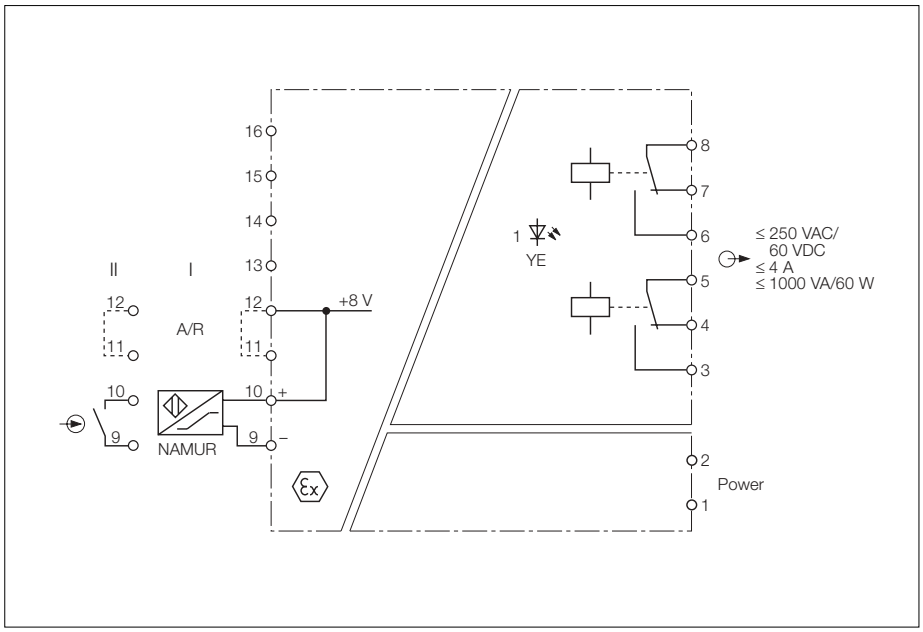

Isolating Switching Amplifier MS1-12Ex0-R

Type	MS1-12Ex0-R
Ident-no.	5311103
Supply voltage U_B	20...250 VAC/20...125 VDC
Line frequency (AC)	40...70 Hz
Power consumption	≤ 3 W
Galvanic isolation	between input circuit, output circuit and supply voltage for 250 V_{rms} test voltage 2.5 kV_{rms}
Input circuits	according to EN 60947-5-6 (NAMUR), intrinsically safe according to EN 50020
Operating characteristics	
– Voltage	8 V
– Current	8 mA
Switching threshold	1.55 mA
Hysteresis	0.2 mA
Output circuits	2 relay outputs
Contacts	1 SPDT contact, silver-alloy + 3 µm Au
Switching voltage	≤ 250 VAC/60 VDC
Switching current	≤ 4 A
Switching capacity	≤ 1000 VA/60 W
Switching frequency	≤ 10 Hz
Ex-Approval acc. to certificate of conformity	DMT 01 ATEX E 119
Maximum nominal values	
– No load voltage U_0	11.0 V
– Short-circuit current I_0	55 mA
– Power P_0	150 mW
– Safety voltage U_m	250 VAC/125VDC
Max. external inductances/capacitances L_0/C_0	
– [EEx ia] IIC	1 mH/500 nF
– [EEx ia] IIB	3 mH/2500 nF
– [EEx ia] I	10 mH/10 µF
Marking of device	II (1) GD [EEx ia] IIC I (M1) [EEx ia] I
LED indications	
– Switching status	yellow
Housing	50 mm wide, Polycarbonate/ABS
Mounting	panel mounting or snap-on clamps for top-hat rail (DIN 50022)
Connection	2 x 8 self-lifting pressure plates
Connection profile	≤ 2 x 2.5 mm^2 or 2 x 1.5 mm^2 with wire sleeves
Degree of protection (IEC 60529/EN 60529)	IP20
Operating temperature	-25…+60 °C

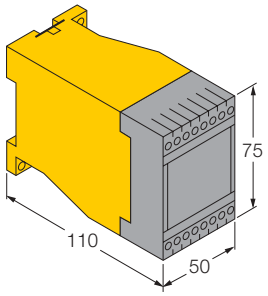

Isolating Switching Amplifier MS1-22Ex0-R 2-channel

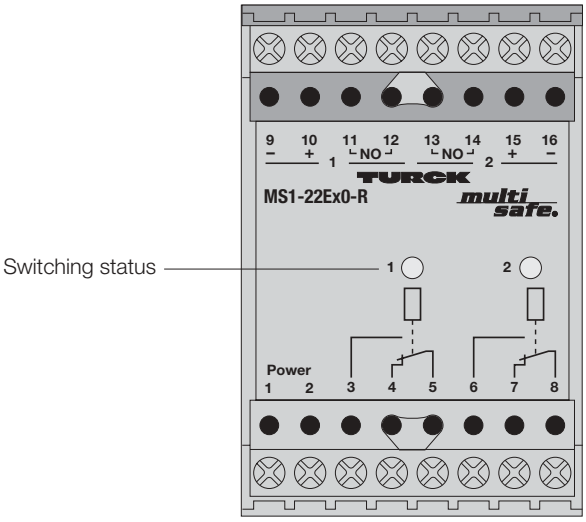

- **2-channel isolating switching amplifier**
- **Intrinsically safe input circuits EEx ia**
- **Area of application according to ATEX: II (1) GD, I (M1)**
- **Galvanic isolation between input circuits, output circuits and supply voltage**
- **2 relay outputs, each with one SPDT contact**
- **Selectable NO/NC output function of each channel**
- **Universal supply voltage (20...250 VAC/20...125 VDC)**

The MS1-22Ex0-R is a dual channel switching amplifier with intrinsically safe input circuits. They can be connected to sensors according to EN 60947-5-6 (NAMUR), variable resistors or potential-free contacts. Each output circuit has a relay with an SPDT contact.

The output function of each channel is programmable for normally open (NO/A) mode (link terminals) or normally closed (NC/R) mode (leave terminals open). Use terminals 11/12 to program channel 1 and terminals 13/14 for channel 2.

This unit does not have input circuit monitoring. Therefore, this device provides an inexpensive alternative in systems which use NAMUR sensors (I) or mechanical contacts (II).

The yellow LEDs indicates the status of the outputs.

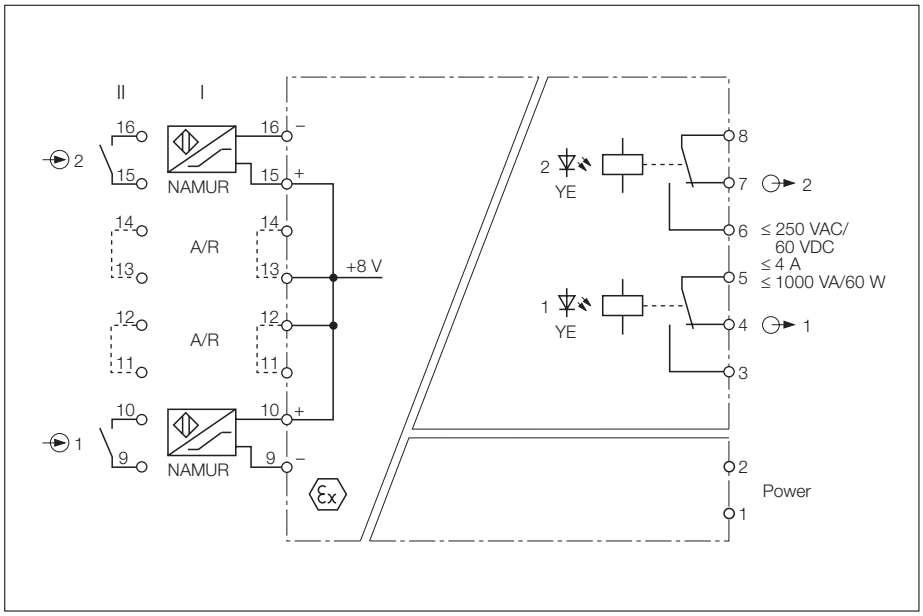

Isolating Switching Amplifier MS1-22Ex0-R

Type	MS1-22Ex0-R
Ident-no.	5312403
Supply voltage U_B	20...250 VAC/20...125 VDC
Line frequency (AC)	40...70 Hz
Power consumption	≤ 3 W
Galvanic isolation	between input circuit, output circuit and supply voltage for 250 V_{rms} test voltage 2.5 kV_{rms}
Input circuits	according to EN 60947-5-6 (NAMUR), intrinsically safe according to EN 50020
Operating characteristics	
– Voltage	8 V
– Current	8 mA
Switching threshold	1.55 mA
Hysteresis	0.2 mA
Output circuits	2 relay outputs
Contacts	1 SPDT contact, silver-alloy + 3 µm Au
Switching voltage	≤ 250 VAC/60 VDC
Switching current	≤ 4 A
Switching capacity	≤ 1000 VA/60 W
Switching frequency	≤ 10 Hz
Ex-approval acc. to certificate of conformity	DMT 01 ATEX E 119
Maximum nominal values	
– No load voltage U_0	11.0 V
– Short-circuit current I_0	55 mA
– Power P_0	150 mW
– Safety voltage U_m	250 VAC/125VDC
Max. external inductances/capacitances L_0/C_0	
– [EEx ia] IIC	1 mH/500 nF
– [EEx ia] IIB	3 mH/2500 nF
– [EEx ia] I	10 mH/10 µF
Marking of device	II (1) GD [EEx ia] IIC I (M1) [EEx ia] I
LED indication	
– Switching status	yellow
Housing	50 mm wide, Polycarbonate/ABS
Mounting	panel mounting or snap-on clamps for top-hat rail (DIN 50022)
Connection	2 x 8 self-lifting pressure plates
Connection profile	≤ 2 x 2.5 mm^2 or 2 x 1.5 mm^2 with wire sleeves
Degree of protection (IEC 60529/EN 60529)	IP20
Operating temperature	-25…+60 °C

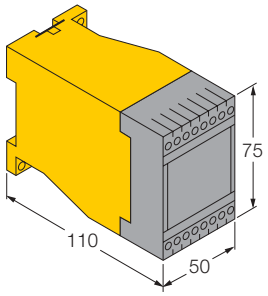

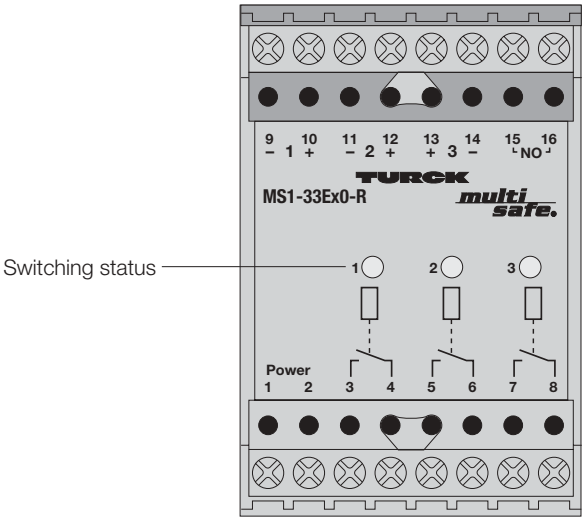

Isolating Switching Amplifier MS1-33Ex0-R 3-channel

- **3-channel isolating switching amplifier**
- **Intrinsically safe input circuits EEx ia**
- **Area of application according to ATEX: II (1) GD, I (M1)**
- **Galvanic isolation between input circuits, output circuits and supply voltage**
- **3 relay outputs, each with one NO contact**
- **Selectable NO/NC output function**
- **Universal supply voltage (20...250 VAC/20...125 VDC)**

The MS1-33Ex0-R switching amplifier is a 3-channel device with intrinsically safe input circuits. They can be connected to sensors according to EN 60947-5-6 (NAMUR), variable resistors or potential-free contacts. All three output circuits have individual relays with one NO contact.

The selected output mode applies to all three channels. Program for normally closed (NC/R) mode by leaving terminals 15 and 16 open, or normally open (NO/A) mode by jumpering terminals 15 and 16 (I).

This unit does not have input circuit monitoring. Therefore, this device provides an inexpensive alternative in systems which use NAMUR sensors or mechanical contacts.

The MS1-33Ex0-R switching amplifier has an alternate configuration used to multiply outputs. This is achieved by connecting a single input device to terminals 15 and 16 (II). All three relay outputs will then operate in parallel according to the selected output mode (each output is programmed by linking the appropriate input channels).

The yellow LEDs indicate the switching status of the outputs.

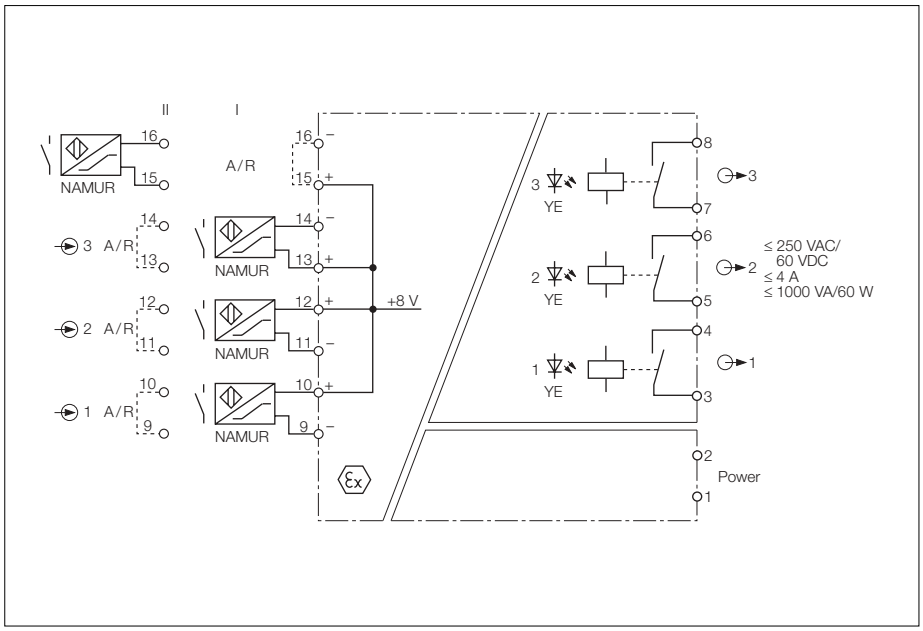

Isolating Switching Amplifier MS1-33Ex0-R

Type	MS1-33Ex0-R
Ident-no.	5313102
Supply voltage U_B	20...250 VAC/20...125 VDC
Line frequency (AC)	40…70 Hz
Power consumption	≤ 3 W
Galvanic isolation	between input circuit, output circuit and supply voltage for 250 V_{rms}, test voltage 2.5 kV_{rms}
Input Circuits	acc. to EN 60947-5-6 (NAMUR), intrinsically safe according to EN 50020
Operating characteristics	
– Voltage	8 V
– Current	4.5 mA
Switching threshold	1.55 mA
Hysteresis	0.2 mA
Output Circuits	3 relay outputs
Contacts	1 NO contact, silver-alloy + 3 µm Au
Switching voltage	≤ 250 VAC/60 VDC
Switching current	≤ 4 A
Switching capacity	≤ 1000 VA/60 W
Switching frequency	≤ 10 Hz
Ex-approval acc. to certificate of conformity	DMT 01 ATEX E 119
Maximum nominal values	
– No load voltage U_0	11.0 V
– Short-circuit current I_0	55 mA
– Power P_0	150 mW
– Safety voltage U_m	250 VAC/125VDC
Max. external inductances/capacitances L_0/C_0	
– [EEx ia] IIC	1 mH/500 nF
– [EEx ia] IIB	3 mH/2500 nF
– [EEx ia] I	10 mH/10 µF
Marking of device	II (1) GD [EEx ia] IIC I (M1) [EEx ia] I
LED Indications	
– Switching status	3 x yellow
Housing	50 mm wide, Polycarbonate/ABS
Mounting	panel mounting or snap-on clamps for top-hat rail (DIN 50022)
Connection	2 x 8 self-lifting pressure plates
Connection profile	≤ 2 x 2.5 mm^2 or 2 x 1.5 mm^2 with wire sleeves
Degree of protection (IEC 60529/EN 60529)	IP20
Operating temperature	-25…+60 °C

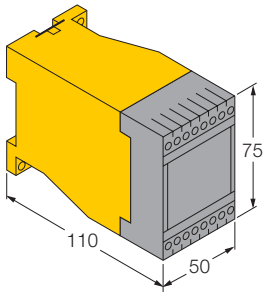

 Hans Turck GmbH & Co.KG • D–45466 Mülheim/Ruhr • Tel. 0208/4952-0 • Fax 0208/4952-264 • E-Mail: turckmh@mail.turck-globe.de • www.turck.com

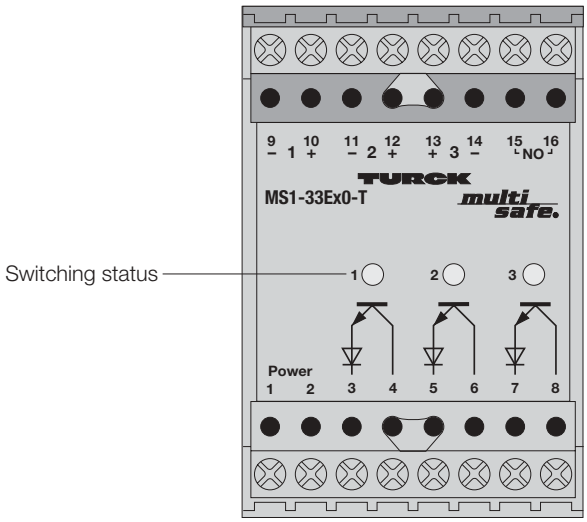

Isolating Switching Amplifier MS1-33Ex0-T 3-channel

- **3-channel isolating switching amplifier**
- **Intrinsically safe input circuits EEx ia**
- **Area of application according to ATEX: II (1) GD, I (M1)**
- **Galvanic isolation between input circuits, output circuits and supply voltage**
- **3 isolated short-circuit protected transistor outputs**
- **Selectable NO/NC output function**
- **Universal supply voltage (20...250 VAC/20...125 VDC)**

The MS1-33Ex0-T switching amplifiers are 3-channel devices with intrinsically safe input circuits. They can be connected to sensors according to EN 60947-5-6 (NAMUR), variable resistors or potential-free contacts. All three output circuits are provided with an isolated, short-circuit protected transistor output.

The selected output mode applies to all three channels. Program normally closed mode (NC/R) by leaving terminals 15 and 16 open, or normally open mode (NO/A) by linking terminals 15 and 16 (I).

These units do not have input circuit monitoring. Therefore these devices provide an inexpensive alternative in systems which use NAMUR sensors or mechanical contacts.

The MS1-33Ex0-T switching amplifier has an alternate configuration used to multiply outputs. This is achieved by connecting a single input device to terminals 15 and 16 (II). All three transistor outputs will then operate in parallel according to the selected output mode (each output is programmed by linking the appropriate input channels).

The yellow LEDs indicate the switching status of the outputs.

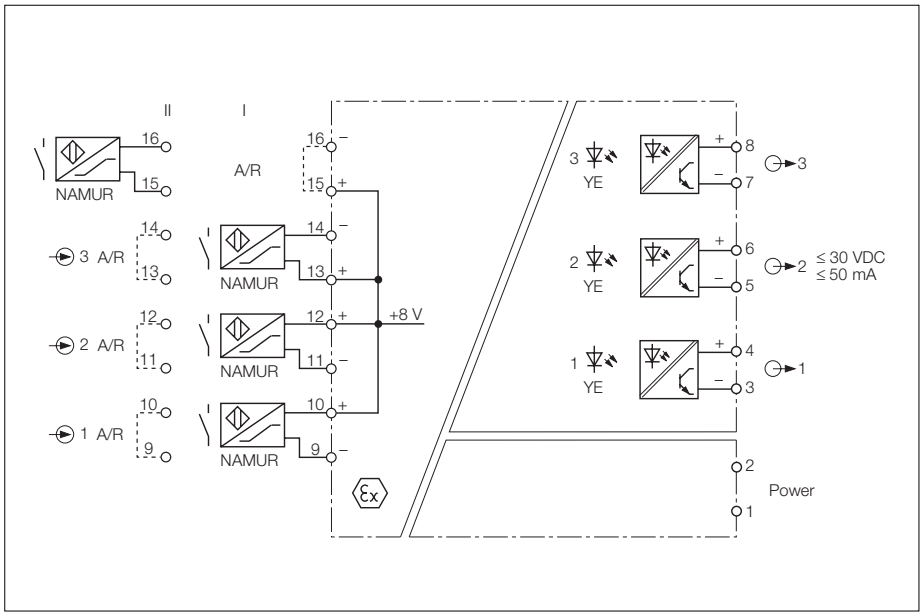

Isolating Switching Amplifier MS1-33Ex0-T

Type	MS1-33Ex0-T
Ident-no.	5413103
Supply voltage U_B	20...250 VAC/20...125 VDC
Line frequency (AC)	40...70 Hz
Power consumption	≤ 3 W
Galvanic isolation	between input circuit, output circuit and supply voltage for 250 V_{rms} test voltage 2.5 kV_{rms}
Input circuits	according to EN 60947-5-6 (NAMUR), intrinsically safe according to EN 50020
Operating characteristics	
– Voltage	8 V
– Current	4.5 mA
Switching threshold	1.55 mA
Hysteresis	0.2 mA
Output circuits	3 transistor outputs, potential-free, short-circuit protected
Switching voltage	≤ 30 VDC
Switching current per output	≤ 50 mA
Voltage drop	≤ 2.5 V
Switching frequency	≤ 2 kHz
Ex-approval acc. to certificate of conformity	DMT 01 ATEX E 119
Maximum nominal values	
– No load voltage U_0	11.0 V
– Short-circuit current I_0	55 mA
– Power P_0	150 mW
– Safety voltage U_m	250 VAC/125VDC
Max. external inductances/capacitances L_0/C_0	
– [EEx ia] IIC	1 mH/500 nF
– [EEx ia] IIB	3 mH/2500 nF
– [EEx ia] I	10 mH/10 µF
Marking of device	II (1) GD [EEx ia] IIC I (M1) [EEx ia] I
LED indication	
– Switching status	yellow
Housing	50 mm wide, Polycarbonate/ABS
Mounting	panel mounting or snap-on clamps for top-hat rail (DIN 50022)
Connection	2 x 8 self-lifting pressure plates
Connection profile	≤ 2 x 2.5 mm^2 or 2 x 1.5 mm^2 with wire sleeves
Degree of protection (IEC 60529/EN 60529)	IP20
Operating temperature	-25…+60 °C

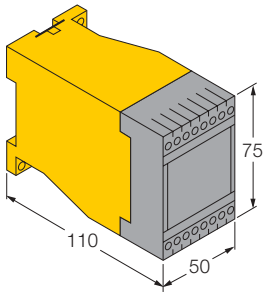

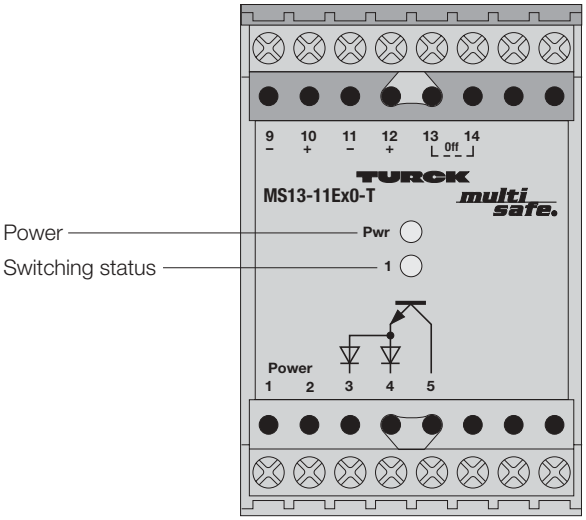

Isolating Switching Amplifier MS13-11Ex0-T 1-channel

- **1-channel isolating switching amplifier**
- **Intrinsically safe input circuit EEx ia**
- **Area of application according to ATEX: II (1) GD, I (M1)**
- **Galvanic isolation between input circuit, output circuit and supply voltage**
- **Input circuit monitoring for wire-break and short-circuit (can be disabled)**
- **Isolated output transistor, short-circuit and reverse polarity protected**
- **Selectable NO/NC output function**
- **Universal supply voltage (20...250 VAC/20...125 VDC)**

The MS13-11-Ex0-T switching amplifiers are single channel devices with an intrinsically safe input circuit. It can be connected to sensors according to EN 60947-5-6 (NAMUR), variable resistors or potential-free contacts.The output circuit is provided with an isolated, short-circuit and reverse polarity protected transistor output.

The output is programmable for normally open mode (NO/A) or normally closed mode (NC/R). Install a jumper between terminals 11 and 12 for NO mode. Leave terminals 11 and 12 open for NC mode. The input circuit is monitored for short-circuit and wire-break. Should an input fault occur, the output is disabled and the green LED turns off.

The input circuit monitoring function can be disabled by linking terminals 13 and 14.

The green LED on the front cover indicates that the devices are powered. The yellow LEDs indicate the switching status of the outputs.

If mechanical contacts are used for input, shunt resistors must be connected to the contacts (II) or input circuit monitoring must be disabled (III).
This will prevent the switching amplifier from recognising the contacts as a wire-break or short-circuit.

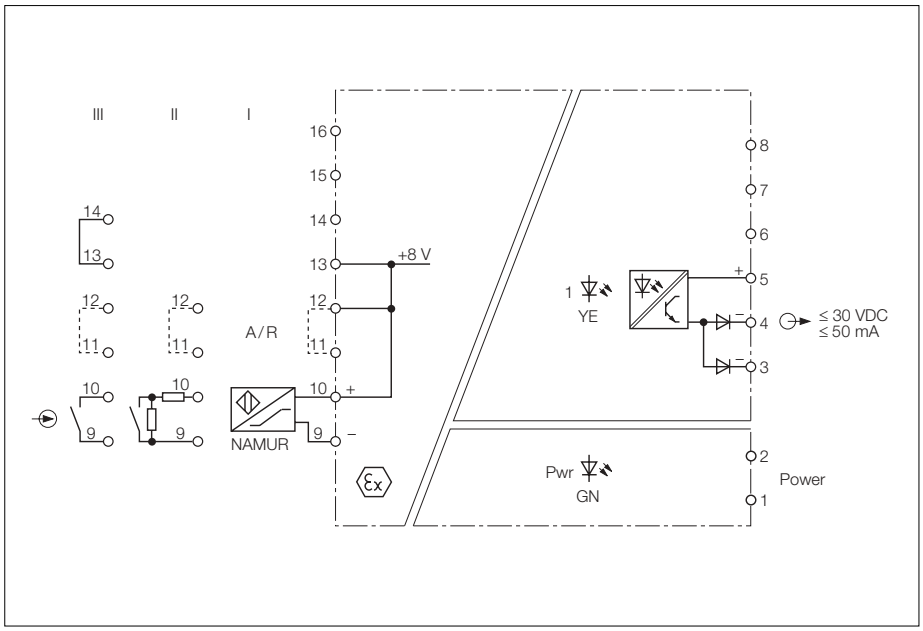

Isolating Switching Amplifier MS13-11Ex0-T

Type	MS13-11Ex0-T
Ident-no.	5420302
Supply voltage U_B	20...250 VAC/20...125 VDC
Line frequency (AC)	40...70 Hz
Power consumption	≤ 3 W
Galvanic isolation	between input circuit, output circuit and supply voltage for 250 V_{rms} test voltage 2.5 kV_{rms}
Input circuits	according to EN 60947-5-6 (NAMUR), intrinsically safe according to EN 50020
Operating characteristics	
– Voltage	8 V
– Current	8 mA
Switching threshold	1.55 mA
Hysteresis	0.2 mA
Wire-break threshold	≤ 0.1 mA
Short-circuit threshold	R_a approx. 200 Ω
Output circuits	transistor output, potential-free, short-circuit and reverse polarity protected
Switching voltage	≤ 30 VDC
Switching current per ooutput	≤ 50 mA
Voltage drop	≤ 2.5 V
Switching frequency	≤ 2 kHz
Contact configuration Of mechanical switches with active input circuit monitoring function	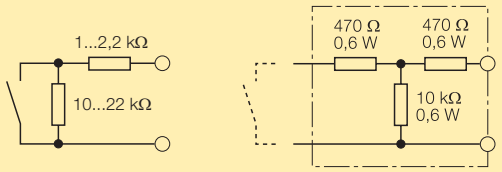 resistor module WM1, ident-no. 0912101
Ex-approval acc. to certificate of conformity	DMT 01 ATEX E 119
Maximum nominal values	
– No load voltage U_0	11.0 V
– Short-circuit current I_0	55 mA
– Power P_0	150 mW
– Safety voltage U_m	250 VAC/125VDC
Max. external inductances/capacitances L_0/C_0	
– [EEx ia] IIC	1 mH/500 nF
– [EEx ia] IIB	3 mH/2500 nF
– [EEx ia] I	10 mH/10 µF
Marking of device	II (1) GD [EEx ia] IIC I (M1) [EEx ia] I
LED indications	
– Power	green
– Switching status	yellow
Housing	50 mm wide, Polycarbonate/ABS
Mounting	panel mounting or snap-on clamps for top-hat rail (DIN 50022)
Connection	2 x 8 self-lifting pressure plates
Connection profile	≤ 2 x 2.5 mm² or 2 x 1.5 mm² with wire sleeves
Degree of protection (IEC 60529/EN 60529)	IP20
Operating temperature	-25…+60 °C

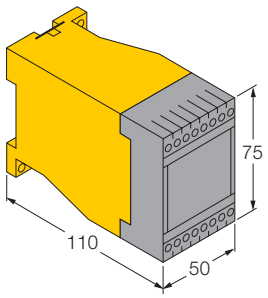

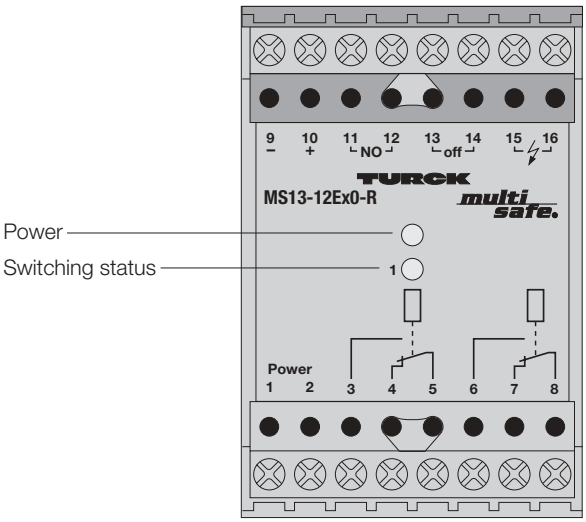

Isolating Switching Amplifier MS13-12Ex0-R 1-channel

- **1-channel isolating switching amplifier**
- **Intrinsically safe input circuit EEx ia**
- **Area of application according to ATEX: II (1) GD, I (M1)**
- **Galvanic isolation between input circuit, output circuit and supply voltage**
- **Input circuit monitoring for short-circuit and wire-break (can be disabled)**
- **2 relay outputs, each with one SPDT contact**
- **Selectable common alarm output**
- **Selectable NO/NC output function**
- **Universal supply voltage (20...250 VAC/20...125 VDC)**

The MS13-12Ex0-R switching amplifier is a single channel device with an intrinsically safe input circuit. It can be connected to sensors according to EN 60947-5-6 (NAMUR), variable resistors or potential-free contacts. The output circuit has two independent relays, each one with an SPDT contact.

The output is programmable for normally open mode (NO/A) or normally closed mode (NC/R). Select NO mode by installing a jumper between terminals 11 and 12. Leave terminals 11 and 12 open for NC mode.

This unit provides optional wire-break and short-circuit monitoring of the input circuit. The input circuit monitoring function is disabled by jumpering terminals 13/14.

Linking terminals 15 and 16 changes the function of one relay (terminals 8, 7, 6) to provide a common output fault alarm (II).

The green LED on the front cover indicates that the devices are powered.

During an input fault, the alarm output is disabled (relay de-energised, green LED off). When no faults are in any of the input circuits and the power is on, the alarm output is enabled (relay energised, green LED on). The yellow LEDs indicate the switching status of the outputs.

When using mechanical contacts as the input device, the input circuit monitoring function must be disabled (IV), or shunt resistors (II) connected to the contacts. This will prevent the switching amplifier from recognising the contacts as a wire-break or a fault.

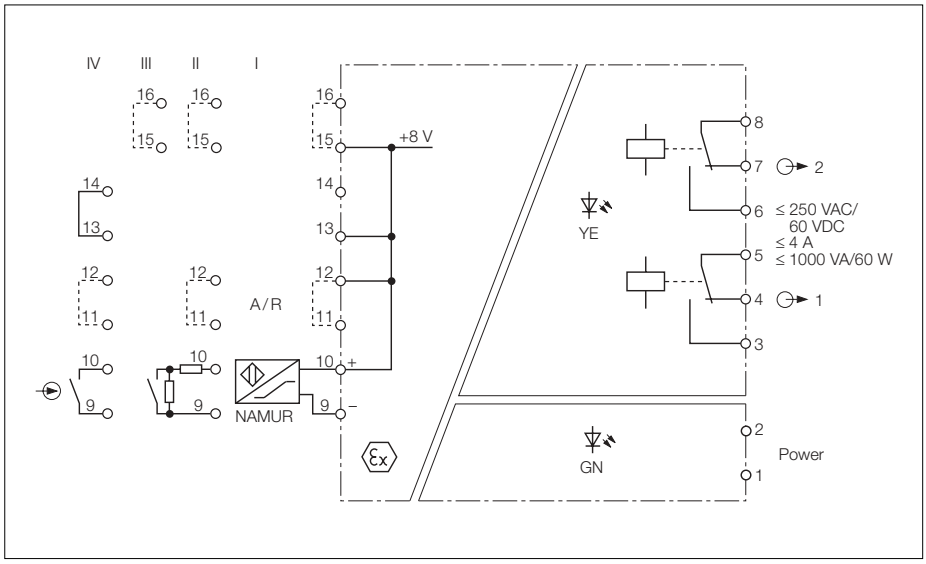

Isolating Switching Amplifier MS13-12Ex0-R

Type	MS13-12Ex0-R
Ident-no.	5321302
Supply voltage U_B	20...250 VAC/20...125 VDC
Line frequency (AC)	40...70 Hz
Power consumption	≤ 3 W
Galvanic isolation	between input circuit, output circuit and supply voltage for 250 V_{rms} test voltage 2.5 kV_{rms}
Input circuits	according to EN 60947-5-6 (NAMUR), intrinsically safe according to EN 50020
Operating characteristics	
– Voltage	8 V
– Current	8 mA
Switching threshold	1.55 mA
Hysteresis	0.2 mA
Wire-break threshold	≤ 0.1 mA
Short-circuit threshold	R_a approx. 200 Ω
Contact configuration Of mechanical switches with active input circuit monitoring function	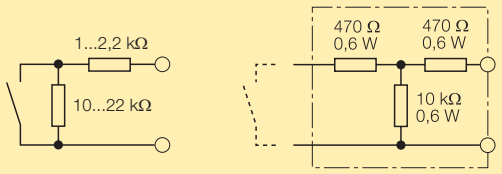 resistor module WM1, ident-no. 0912101
Output circuits	2 relay outputs
Contacts	1 SPDT contact, silver-alloy + 3 µm Au
Switching voltage	≤ 250 VAC/60 VDC
Switching current	≤ 4 A
Switching capacity	≤ 1000 VA/60 W
Switching frequency	≤ 10 Hz
Ex-approval acc. to certificate of conformity	DMT 01 ATEX E 119
Maximum nominal values	
– No load voltage U_0	11.0 V
– Short-circuit current I_0	55 mA
– Power P_0	150 mW
– Safety voltage U_m	250 VAC/125VDC
Max. external inductances/capacitances L_0/C_0	
– [EEx ia] IIC	1 mH/500 nF
– [EEx ia] IIB	3 mH/2500 nF
– [EEx ia] I	10 mH/10 µF
Marking of device	II (1) GD [EEx ia] IIC I (M1) [EEx ia] I
LED Indications	
– Power	green
– Switching status	yellow
Housing	50 mm wide, Polycarbonate/ABS
Mounting	panel mounting or snap-on clamps for top-hat rail (DIN 50022)
Connection	2 x 8 self-lifting pressure plates
Connection profile	≤ 2 x 2.5 mm² or 2 x 1.5 mm² with wire sleeves
Degree of protection (IEC 60529/EN 60529)	IP20
Operating temperature	-25…+60 °C

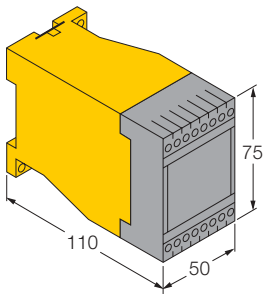

 Hans Turck GmbH & Co.KG • D–45466 Mülheim/Ruhr • Tel. 0208/4952-0 • Fax 0208/4952-264 • E-Mail: turckmh@mail.turck-globe.de • www.turck.com

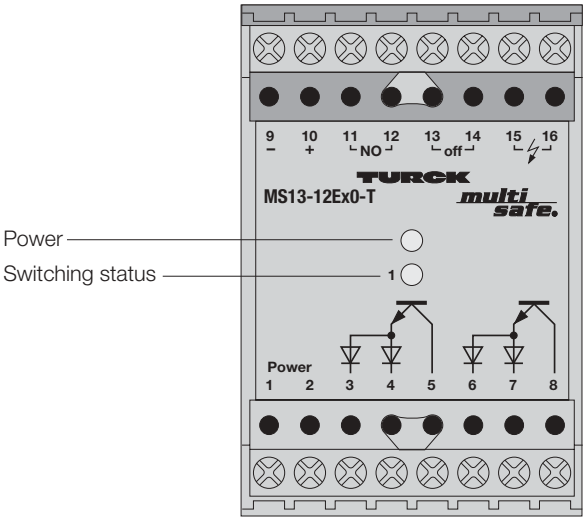

Isolating Switching Amplifier MS13-12Ex0-T 1-channel

- **1-channel isolating switching amplifier**
- **Intrinsically safe input circuit EEx ia**
- **Area of application according to ATEX: II (1) GD, I (M1)**
- **Galvanic isolation between input circuit, output circuit and supply voltage**
- **Input circuit monitoring for short-circuit and wire-break (can be disabled)**
- **2 isolated, short-circuit and reverse polarity protected transistor outputs**
- **Selectable common alarm output**
- **Selectable NO/NC output function**
- **Universal supply voltage (20...250 VAC/20...125 VDC)**

The MS13-12Ex0-T switching amplifier is a single channel device with an intrinsically safe input circuit. It can be connected to sensors according to EN 60947-5-6 (NAMUR), variable resistors or potential-free contacts. The output circuit has two isolated, short-circuit and reverse polarity protected transistor outputs.

The output is programmable for normally open mode (NO/A) or normally closed mode (NC/R). Select NO mode by installing a jumper between terminals 11 and 12. Leave terminals 11 and 12 open for NC mode.

This unit features wire-break and short-circuit monitoring of the input circuit. The input circuit monitoring function can be disabled by linking terminals 13 and 14.

Linking terminals 15 and 16 changes the function of one relay (terminals 8, 7, 6) to provide a common output fault alarm (II).

The green LED on the front cover indicates that the devices are powered. The yellow LEDs indicate the switching status of the outputs.
During an input fault, the alarm output is disabled (transistor not conducting, green LED off). When no faults are in any of the input circuits and the power is on, the alarm output is enabled (transistor conducting, green LED on).

When using mechanical contacts as the input device, the input circuit monitoring function must be disabled (IV), or shunt resistors (III) connected to the contacts. This will prevent the switching amplifier from recognising the contacts as a wire-break or a fault.

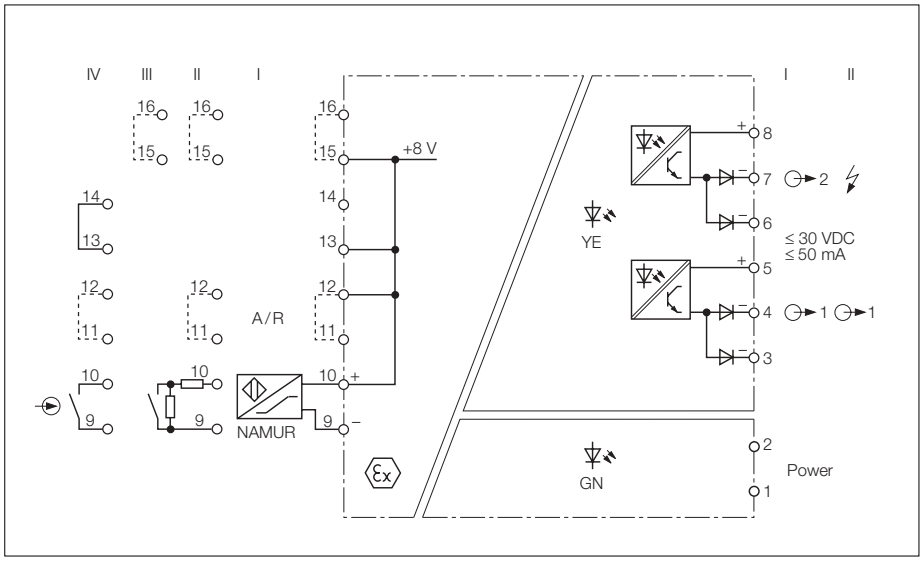

Isolating Switching Amplifier MS13-12Ex0-T

Type	MS13-12Ex0-T
Ident-no.	5445001
Supply voltage U_B	20...250 VAC/20...125 VDC
Line frequency (AC)	40...70 Hz
Power consumption	≤ 3 W
Galvanic isolation	between input circuit, output circuit and supply voltage for 250 V_{rms} test voltage 2.5 kV_{rms}
Input circuits	according to EN 60947-5-6 (NAMUR), intrinsically safe according to EN 50020
Operating characteristics	
– Voltage	8 V
– Current	8 mA
Switching threshold	1.55 mA
Hysteresis	0.2 mA
Wire-break threshold	≤ 0.1 mA
Short-circuit threshold	R_a approx. 200 Ω
Contact configuration Of mechanical switches with active input circuit monitoring function	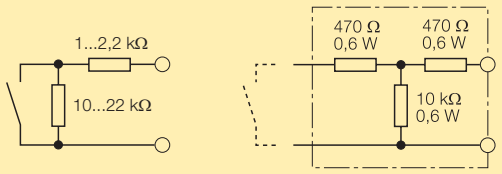 resistor module WM1, ident-no. 0912101
Output circuits	2 pnp transistor outputs, potential-free, short-circuit and reverse polarity protected
Switching voltage	≤ 30 VDC
Switching current per output	≤ 50 mA
Voltage drop	≤ 2.5 V
Switching frequency	≤ 2 kHz
Ex-approval acc. to certificate of conformity	DMT 01 ATEX E 119
Maximum nominal values	
– No load voltage U_0	11.0 V
– Short-circuit current I_0	55 mA
– Power P_0	150 mW
– Safety voltage U_m	250 VAC/125VDC
Max. external inductances/capacitances L_0/C_0	
– [EEx ia] IIC	1 mH/500 nF
– [EEx ia] IIB	3 mH/2500 nF
– [EEx ia] I	10 mH/10 µF
Marking of device	II (1) GD [EEx ia] IIC I (M1) [EEx ia] I
LED Indications	
– Power	green
– Switching status	yellow
Housing	50 mm wide, Polycarbonate/ABS
Mounting	panel mounting or snap-on clamps for top-hat rail (DIN 50022)
Connection	2 x 8 self-lifting pressure plates
Connection profile	≤ 2 x 2.5 mm² or 2 x 1.5 mm² with wire sleeves
Degree of protection (IEC 60529/EN 60529)	IP20
Operating temperature	-25…+60 °C

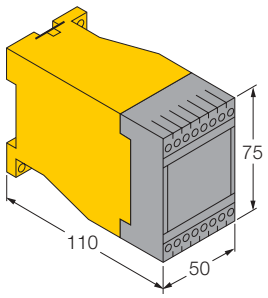

 Hans Turck GmbH & Co.KG • D–45466 Mülheim/Ruhr • Tel. 0208/4952-0 • Fax 0208/4952-264 • E-Mail: turckmh@mail.turck-globe.de • www.turck.com

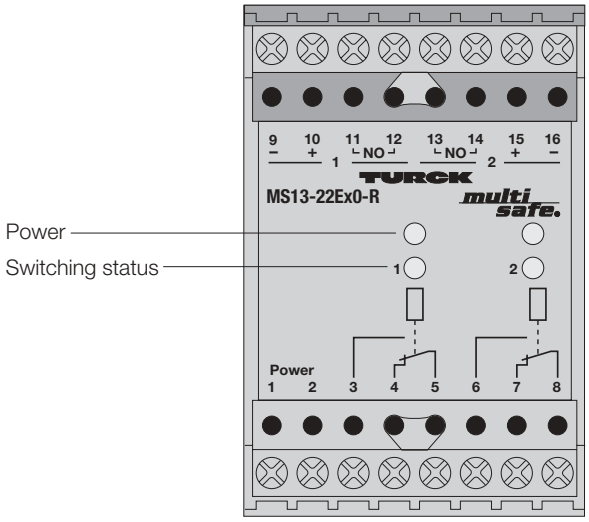

Isolating Switching Amplifier MS13-22Ex0-R 2-channel

- **2-channel isolating switching amplifier**
- **Intrinsically safe input circuits EEx ia**
- **Area of application according to ATEX: II (1) GD, I (M1)**
- **Galvanic isolation between input circuits, output circuits and supply voltage**
- **Input circuit monitoring for short-circuit and wire-break**
- **2 relay outputs, each with one SPDT contact**
- **Selectable NO/NC output function**
- **Universal supply voltage (20...250 VAC/20...125 VDC)**

The MS13-22Ex0-R is a dual channel device with intrinsically safe input circuits. They can be connected to sensors according to EN 60947-5-6 (NAMUR), variable resistors or potential-free contacts. Each output circuit has one relay output with an SPDT contact.

The output of each channel is programmable for normally open mode (with jumper) or normally closed mode (without jumper). Program channel 1 for NO/A mode with a jumper between terminals 11 and 12. Leave terminals 11 and 12 open for NC/R mode. Terminals 13 and 14 perform the same functions for channel 2.

The green LED on the front cover indicates that the devices are powered. The yellow LEDs indicate the switching status of the outputs.

The input circuits are monitored for wire-break and short-circuit conditions. The respective output de-energises during an input fault condition and its corresponding green LED turns off.

If mechanical contacts are used as inputs, resistors must be added (II) to the contacts. This will prevent the monitoring circuit from recognising the mechanical contacts as a wire-break or short-circuit.

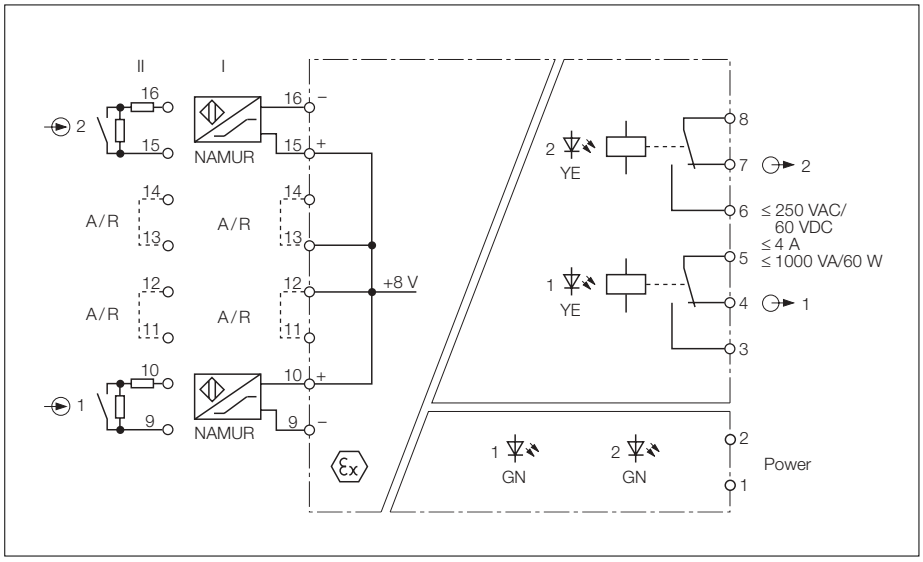

Isolating Switching Amplifier MS13-22Ex0-R

Type	MS13-22Ex0-R
Ident-no.	5322203
Supply voltage U_B	20...250 VAC/20...125 VDC
Line frequency (AC)	40...70 Hz
Power consumption	≤ 3 W
Galvanic isolation	between input circuit, output circuit and supply voltage for 250 V_{rms} test voltage 2.5 kV_{rms}
Input circuits	acc. to EN 60947-5-6 (NAMUR), intrinsically safe according to EN 50020
– Voltage	8 V
– Current	8 mA
Switching threshold	1.55 mA
Hysteresis	0.2 mA
Wire-break threshold	≤ 0.1 mA
Short-circuit threshold	R_a approx. 200 Ω
Contact configuration Of mechanical switches with active input circuit monitoring function	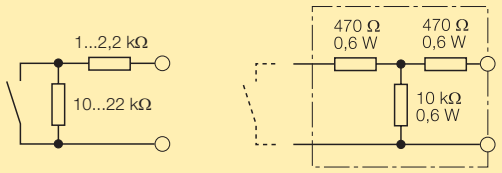 resistor module WM1, ident-no. 0912101
Output circuits	2 relay outputs,
Contacts	1 SPDT contact, silver-alloy + 3 µm Au
Switching voltage	≤ 250 VAC/60 VDC
Switching current	≤ 4 A
Switching capacity	≤ 1000 VA/60 W
Switching frequency	≤ 10 Hz
Ex-approval acc. to certificate of conformity	DMT 01 ATEX E 119
Maximum nominal values	
– No load voltage U_0	11.0 V
– Short-circuit current I_0	55 mA
– Power P_0	150 mW
– Safety voltage U_m	250 VAC/125VDC
Max. external inductances/capacitances L_0/C_0	
– [EEx ia] IIC	1 mH/500 nF
– [EEx ia] IIB	3 mH/2500 nF
– [EEx ia] I	10 mH/10 µF
Marking of device	II (1) GD [EEx ia] IIC I (M1) [EEx ia] I
LED indications	
– Power	green
– Switching status	2 x yellow
Housing	50 mm wide, Polycarbonate/ABS
Mounting	panel mounting or snap-on clamps for top-hat rail (DIN 50022)
Connection	2 x 8 self-lifting pressure plates
Connection profile	≤ 2 x 2.5 mm^2 or 2 x 1.5 mm^2 with wire sleeves
Degree of protection (IEC 60529/EN 60529)	IP20
Operating temperature	-25…+60 °C

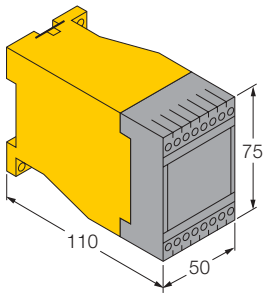

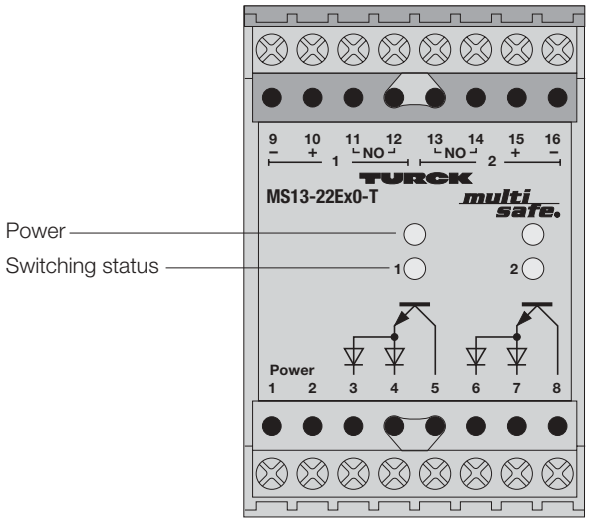

Isolating Switching Amplifier MS13-22Ex0-T 2 channels

- **2-channel isolating switching amplifier**
- **Intrinsically safe input circuits EEx ia**
- **Area of application according to ATEX: II (1) GD, I (M1)**
- **Galvanic isolation between input circuits, output circuits and supply voltage**
- **2 isolated transistor outputs, short-circuit and reverse polarity protected**
- **Input circuit monitoring for short-circuit and wire-break**
- **Selectable NO/NC output function**
- **Universal supply voltage (20...250 VAC/20...125 VDC)**

The MS13-22Ex0-T switching amplifiers are dual channel devices with intrinsically safe input circuits. They can be connected to sensors according to EN 60947-5-6 (NAMUR), variable resistors or potential-free contacts. Each output circuit has one isolated, short-circuit and reverse polarity protected transistor output.

The output of each channel is programmable for normally open mode (with jumper) or normally closed mode (without jumper). Program channel 1 for NO/A mode with a jumper between terminals 11 and 12. Leave terminals 11 and 12 open for NC/R mode. Terminals 13 and 14 perform the same functions for channel 2.

The green LED on the front cover indicates that the devices are powered. The yellow LEDs indicate the switching status of the outputs.

The input circuits are monitored for wire-break and short-circuit conditions. The respective output is disabled during an input fault condition and its corresponding green LED turns off.

When using mechanical contacts as the input device, shunt resistors (II) must be connected to the contacts. This will prevent the switching amplifier from recognising the contacts as a wire-break or fault.

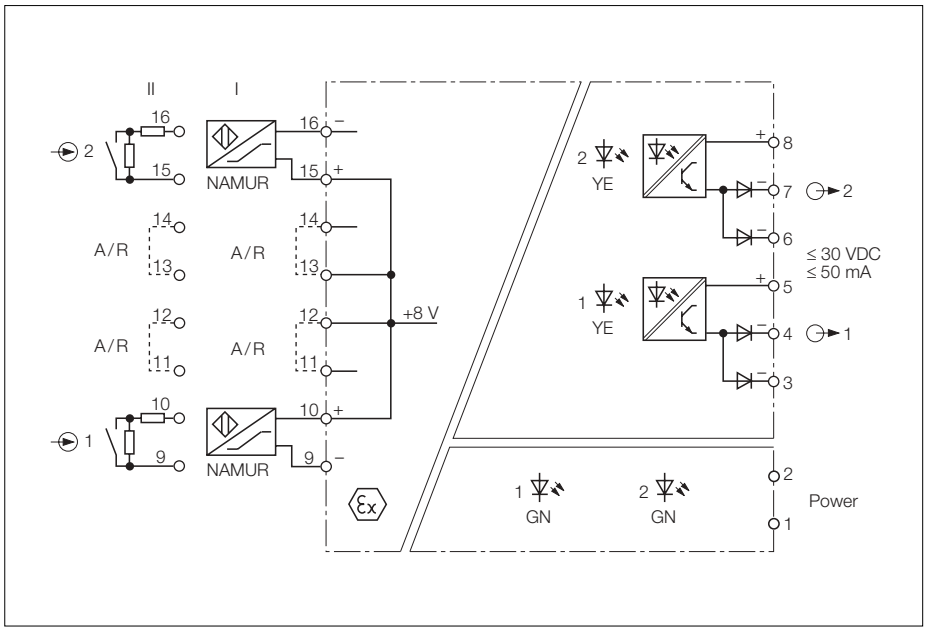

Isolating Switching Amplifier MS13-22Ex0-T

Type	MS13-22Ex0-T
Ident-no.	54 22302
Supply voltage U_B	20...250 VAC/20...125 VDC
Line frequency (AC)	40...70 Hz
Power consumption	≤ 3 W
Galvanic isolation	between input circuit, output circuit and supply voltage for 250 V_{rms} test voltage 2.5 kV_{rms}
Input circuits	acc. to EN 60947-5-6 (NAMUR), intrinsically safe according to EN 50020
Operating characteristics	
– Voltage	8 V
– Current	8 mA
Switching threshold	1.55 mA
Hysteresis	0.2 mA
Wire-break threshold	≤ 0.1 mA
Short-circuit threshold	R_a approx. 200 Ω
Contact configuration Of mechanical switches with active input circuit monitoring function	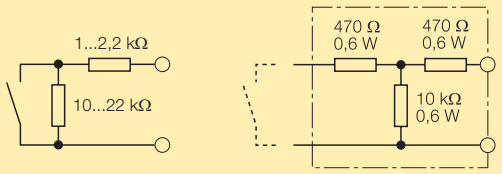 resistor module WM1, ident-no. 0912101
Output circuits	2 potential-free transistor outputs, short-circuit and reverse polarity protected
Switching voltage	≤ 30 VDC
Switching current	≤ 50 mA per channel
Voltage drop	≤ 2.5 V
Switching frequency	≤ 2 kHz
Ex-approval acc. to certificate of conformity	DMT 01 ATEX E 119
Maximum nominal values	
– No load voltage U_0	11.0 V
– Short-circuit current I_0	55 mA
– Power P_0	150 mW
– Safety voltage U_m	250 VAC/125VDC
Max. external inductances/capacitances L_0/C_0	
– [EEx ia] IIC	1 mH/500 nF
– [EEx ia] IIB	3 mH/2500 nF
– [EEx ia] I	10 mH/10 µF
Marking of device	II (1) GD [EEx ia] IIC I (M1) [EEx ia] I
LED indications	
– Power	green
– Switching status	2 x yellow
Housing	50 mm wide, Polycarbonate/ABS
Mounting	panel mounting or snap-on clamps for top-hat rail (DIN 50022)
Connection	2 x 8 self-lifting pressure plates
Connection profile	≤ 2 x 2.5 mm² or 2 x 1.5 mm² with wire sleeves
Degree of protection (IEC 60529/EN 60529)	IP20
Operating temperature	-25…+60 °C

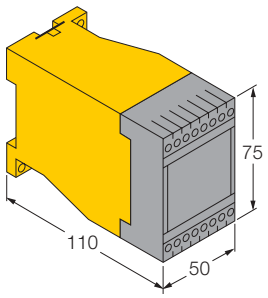

 Hans Turck GmbH & Co.KG • D–45466 Mülheim/Ruhr • Tel. 0208/4952-0 • Fax 0208/4952-264 • E-Mail: turckmh@mail.turck-globe.de • www.turck.com

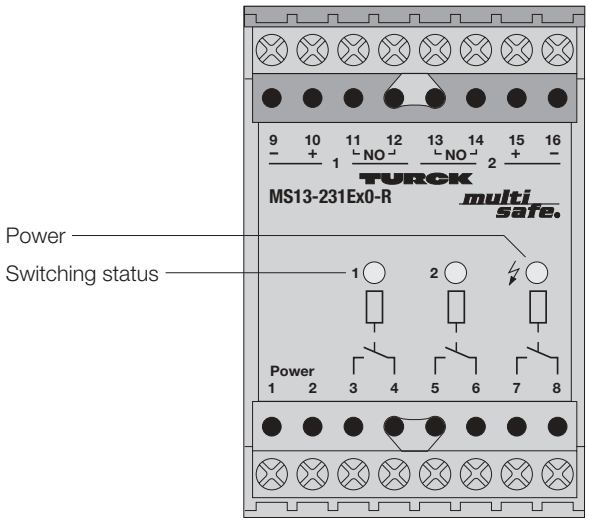

Isolating Switching Amplifier MS13-231Ex0-R 2-channel

- **2-channel isolating switching amplifier with common alarm output**
- **Intrinsically safe input circuits EEx ia**
- **Area of application according to ATEX: II (1) GD, I (M1)**
- **Galvanic isolation between input circuits, output circuits and supply voltage**
- **Input circuit monitoring for short-circuit and wire-break (can be disabled)**
- **2 relay outputs, each with one NO contact**
- **Additional common alarm output**
- **Selectable NO/NC output function of each channel**
- **Universal supply voltage (20...250 VAC/20...125 VDC)**

The MS13-231Ex0-R switching amplifiers are dual channel devices with intrinsically safe input circuits. They can be connected to sensors according to EN 60947-5-6 (NAMUR), variable resistors or potential-free contacts. Each channel has a relay output with one NO contact.

The output of each channel is programmable for normally open mode (NO/A) or normally closed mode (NC/R). Select NO mode by installing a jumper between terminals 11 and 12. Leave terminals 11 and 12 open for NC mode. Terminals 13 and 14 perform the same function for channel 2.

The green LED on the front cover indicates that the devices are powered. The yellow LEDs indicate the switching status of the outputs.

The input circuits are monitored for wire-break and short-circuit conditions. If a short-circuit or a wire-break occurs in one of the input circuits, the affected output de-energises and the green LED turns off. The MS13-231Ex0-R features an additional relay output for common alarm indications. If a fault occurs in one or both input circuits, the alarm output de-energises and the green LED turns off. The alarm output is enabled (relay energised, green LED on) if there is no fault in any of the input circuits and power is on.

When mechanical contacts are used as input devices, resistors (II) must be added to the contacts. This will prevent the monitoring control circuit from recognising the mechanical contacts as a wire-break or short-circuit.

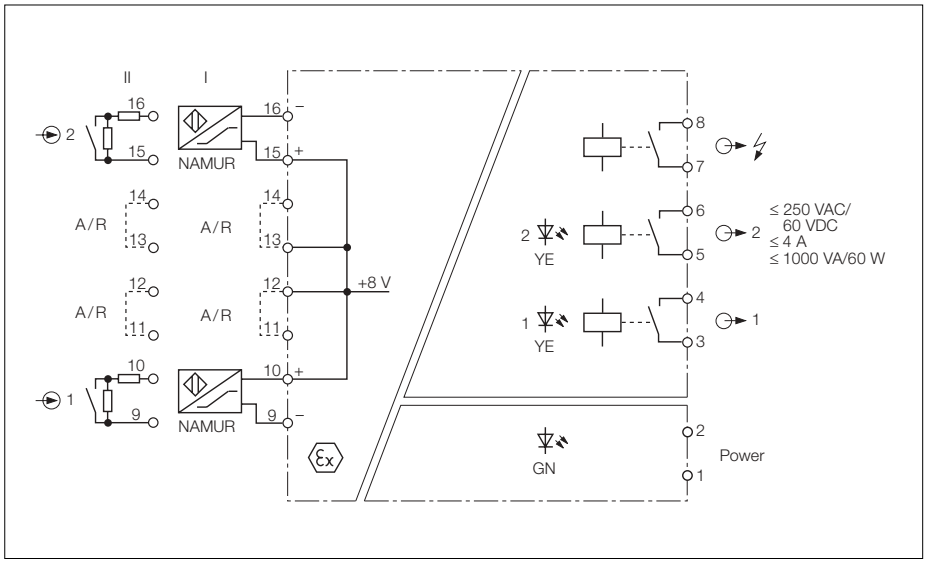

Isolating Switching Amplifier MS13-231Ex0-R

Type	MS13-231Ex0-R
Ident-no.	5335502
Supply voltage U_B	20...250 VAC/20...125 VDC
Line frequency (AC)	40...70 Hz
Power consumption	≤ 3 W
Galvanic isolation	between input circuit, output circuit and supply voltage for 250 V_{rms}, test voltage 2.5 kV_{rms}
Input circuits	acc. to EN 60947-5-6 (NAMUR), intrinsically safe according to EN 50020
Operating characteristics	
– Voltage	8 V
– Current	8 mA
Switching threshold	1.55 mA
Hysteresis	0.2 mA
Wire-break threshold	≤ 0.1 mA
Short-circuit threshold	R_a approx. 200 Ω
Contact configuration	
Of mechanical switches with active input circuit monitoring function	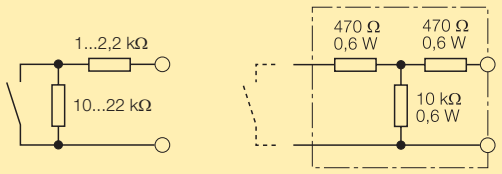 resistor module WM1, ident-no. 0912101
Output circuits	3 relay outputs
Contacts	1 NO contact, silver-alloy + 3 µm Au
Switching voltage	≤ 250 VAC/60 VDC
Switching current	≤ 4 A
Switching capacity	≤ 1000 VA/60 W
Switching frequency	≤ 10 Hz
Ex-approval acc. to certificate of conformity	DMT 01 ATEX E 119
Maximum nominal values	
– No load voltage U_0	11.0 V
– Short-circuit current I_0	55 mA
– Power P_0	150 mW
– Safety voltage U_m	250 VAC/125VDC
Max. external inductances/capacitances L_0/C_0	
– [EEx ia] IIC	1 mH/500 nF
– [EEx ia] IIB	3 mH/2500 nF
– [EEx ia] I	10 mH/10 µF
Marking of device	II (1) GD [EEx ia] IIC I (M1) [EEx ia] I
LED indications	
– Power	green
– Switching status	3 x yellow
Housing	50 mm wide, Polycarbonate/ABS
Mounting	panel mounting or snap-on clamps for top-hat rail (DIN 50022)
Connection	2 x 8 self-lifting pressure plates
Connection profile	≤ 2 x 2.5 mm² or 2 x 1.5 mm² with wire sleeves
Degree of protection (IEC 60529/EN 60529)	IP20
Operating temperature	-25…+60 °C

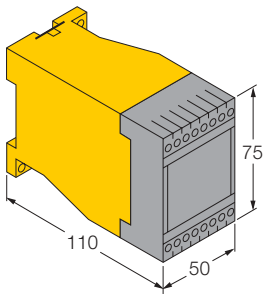

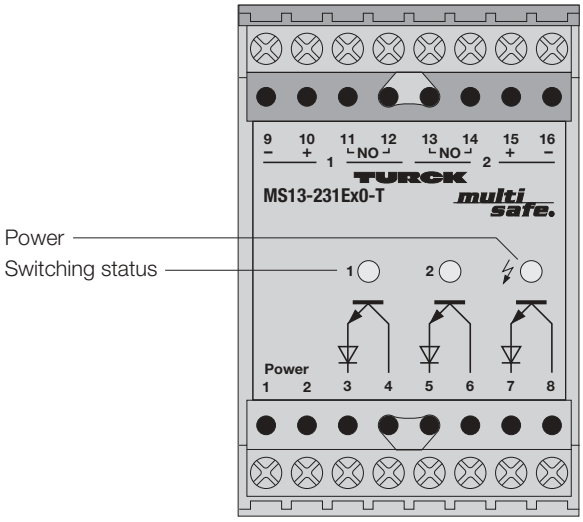

Isolating Switching Amplifier MS13-231Ex0-T 2-channel

- **2-channel isolating switching amplifier with common alarm output**
- **Intrinsically safe input circuits EEx ia**
- **Area of application according to ATEX: II (1) GD, I (M1)**
- **Galvanic isolation between input circuits, output circuits and supply voltage**
- **Input circuit monitoring for short-circuit and wire-break**
- **2 isolated, short-circuit and reverse polarity protected transistor outputs**
- **Additional common alarm output**
- **Selectable NO/NC output function**
- **Universal supply voltage (20...250 VAC/20...125 VDC)**

The MS13-231Ex0-T switching amplifiers are dual channel devices with intrinsically safe input circuits. They can be connected to sensors according to EN 60947-5-6 (NAMUR), variable resistors or potential-free contacts. Each output circuit has one isolated, short-circuit and reverse polarity protected transistor output.
The output function of each channel is programmable for normally open mode (NO/A) or normally closed mode (NC/R). Program channel 1 for NO mode with a jumper between terminals 11/12. Leave terminals 11/12 open for NC mode. Terminals 13 and 14 perform the same function for channel 2.
The green LED on the front cover indicates that the devices are powered. The yellow LEDs indicate the switching status of the outputs.

The input circuits are monitored for wire-break and short-circuit conditions. The respective output de-activates during an input fault condition and the green LED turns off.

The MS13-231Ex0-T features an additional transistor output for common alarm monitoring. If a fault occurs in one or both input circuits, the alarm output is de-activated (transistor disabled, green LED off). The alarm output is activated (transistor conducting), if there is no fault in any of the input circuits and power is on.

If mechanical contacts are used as input devices, resistors (II) must be added to the contacts. This will prevent the monitoring circuit from recognising the mechanical contacts as wire-break or short-circuit.

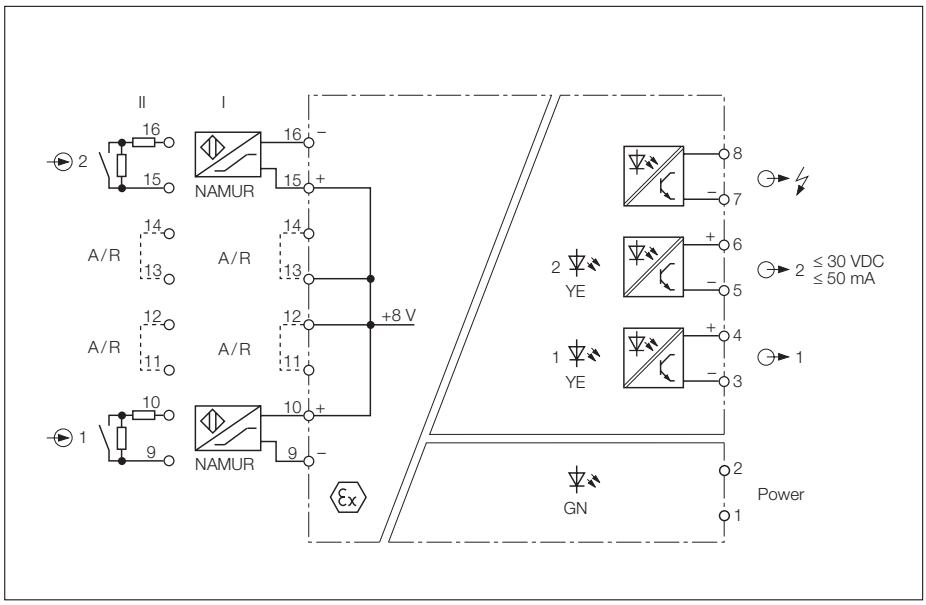

Isolating Switching Amplifier MS13-231Ex0-T

Type	MS13-231Ex0-T
Ident-no.	54470
Supply voltage U_B	20...250 VAC/20...125 VDC
Line frequency (AC)	40...70 Hz
Power consumption	≤ 3 W
Galvanic isolation	between input circuit, output circuit and supply voltage for 250 V_{rms}, test voltage 2.5 kV_{rms}
Input circuits	acc. to EN 60947-5-6 (NAMUR), intrinsically safe according to EN 50020
– Voltage	8 V
– Current	8 mA
Switching threshold	1.55 mA
Hysteresis	0.2 mA
Wire-break threshold	≤ 0.1 mA
Short-circuit threshold	R_a approx. 200 Ω
Contact configuration Of mechanical switches with active input circuit monitoring function	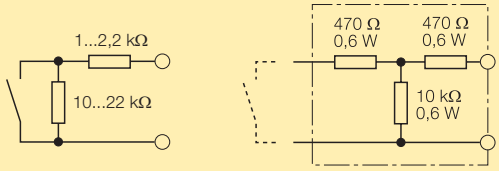 resistor module WM1, ident-no. 0912101
Output circuits	3 transistor outputs, potential-free, short-circuit and reverse polarity protected
Switching voltage	≤ 30 VDC
Switching current	≤ 50 mA
Voltage drop	≤ 2.5 V
Switching frequency	≤ 2 kHz
Ex-approval acc. to certificate of conformity	DMT 01 ATEX E 119
Maximum nominal values	
– No load voltage U_0	11.0 V
– Short-circuit current I_0	55 mA
– Power P_0	150 mW
– Safety voltage U_m	250 VAC/125VDC
Max. external inductances/capacitances L_0/C_0	
– [EEx ia] IIC	1 mH/500 nF
– [EEx ia] IIB	3 mH/2500 nF
– [EEx ia] I	10 mH/10 µF
Marking of device	II (1) GD [EEx ia] IIC I (M1) [EEx ia] I
LED indications	
– Power	green
– Switching status	3 x yellow
Housing	50 mm wide, Polycarbonate/ABS
Mounting	panel mounting or snap-on clamps for top-hat rail (DIN 50022)
Connection	2 x 8 self-lifting pressure plates
Connection profile	≤ 2 x 2.5 mm^2 or 2 x 1.5 mm2 with wire sleeves
Degree of protection (IEC 60529/EN 60529)	IP20
Operating temperature	-25…+60 °C

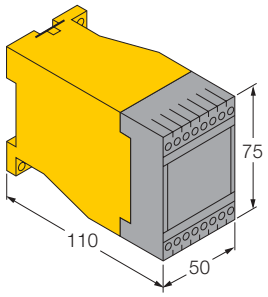

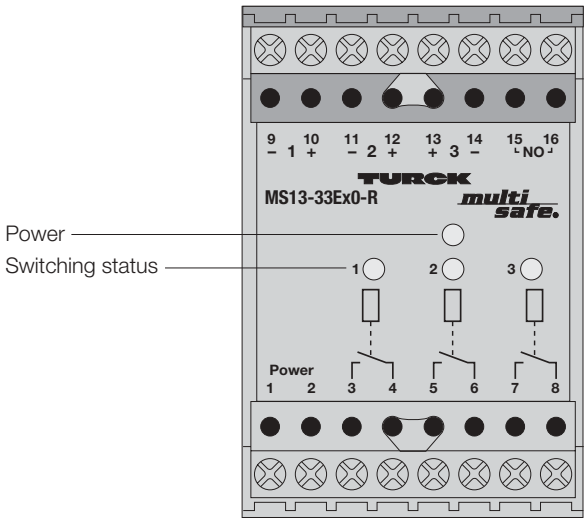

Isolating Switching Amplifier MS13-33Ex0-R 3-channel

- **3-isolating switching amplifier**
- **Intrinsically safe input circuits EEx ia**
- **Area of application according to ATEX: II (1) GD, I (M1)**
- **Galvanic isolation between input circuits, output circuits and supply voltage**
- **Input circuit monitoring for short-circuit and wire-break**
- **3 relay outputs, each with one NO contact**
- **Selectable NO/NC output function**
- **Universal supply voltage (20...250 VAC/20...125 VDC)**

The MS13-33Ex0-R switching amplifier is a 3-channel device with intrinsically safe input circuits. They can be connected to sensors according to EN 60947-5-6 (NAMUR), variable resistors or potential-free contacts. Each output circuit features a relay with one NO contact.

The selected output mode applies to all three channels. Program for normally closed mode (NC/R) by leaving terminals 15/16 open or for normally open mode (NO/A) by linking terminals 15/16.

The input circuits are individually monitored for wire-break and short-circuit.

The green LED on the front cover indicates that the devices are powered. The yellow LEDs indicate the switching status of the outputs. The respective output turns off in a fault condition (green LED off).

When using mechanical contacts as input devices, resistors (II) must be added to the contacts. This will prevent the input monitoring circuit from recognising the mechanical contacts as a wire-break or short-circuit.

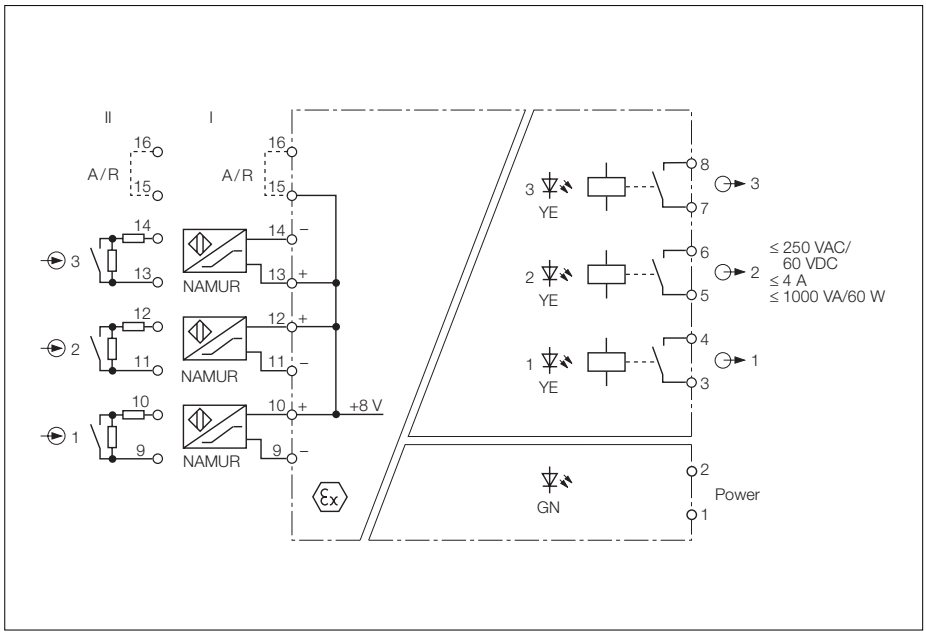

Isolating Switching Amplifier MS13-33Ex0-R

Type	MS13-33Ex0-R
Ident-no.	5333202
Supply voltage U_B	20...250 VAC/20...125 VDC
Line frequency (AC)	40...70 Hz
Power consumption	≤ 3 W
Galvanic isolation	between input circuit, output circuit and supply voltage for 250 V_{rms} test voltage 2.5 kV_{rms}
Input circuits	acc. to EN 60947-5-6 (NAMUR), intrinsically safe according to EN 50020
Operating characteristics	
– Voltage	8 V
– Current	4.5 mA
Switching threshold	1.55 mA
Hysteresis	0.2 mA
Wire-break threshold	≤ 0.1 mA
Short-circuit threshold	R_a approx. 200 Ω
Contact configuration Of mechanical switches with active input circuit monitoring function	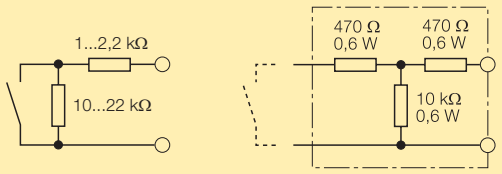 resistor module WM1, ident-no. 0912101
Output circuits	3 relay outputs
Contacts	1 NO contact, silver-alloy + 3 µm Au
Switching voltage	≤ 250 VAC/60 VDC
Switching current	≤ 4 A
Switching capacity	≤ 1000 VA/60 W
Switching frequency	≤ 10 Hz
Ex-approval acc. to certificate of conformity	DMT 01 ATEX E 119
Maximum nominal values	
– No load voltage U_0	11.0 V
– Short-circuit current I_0	55 mA
– Power P_0	150 mW
– Safety voltage U_m	250 VAC/125VDC
Max. external inductances/capacitances L_0/C_0	
– [EEx ia] IIC	1 mH/500 nF
– [EEx ia] IIB	3 mH/2500 nF
– [EEx ia] I	10 mH/10 µF
Marking of device	II (1) GD [EEx ia] IIC I (M1) [EEx ia] I
LED indications	
– Power	green
– Switching status	3 x yellow
Housing	50 mm wide, Polycarbonate/ABS
Mounting	panel mounting or snap-on clamps for top-hat rail (DIN 50022)
Connection	2 x 8 self-lifting pressure plates
Connection profile	≤ 2 x 2.5 mm² or 2 x 1.5 mm² with wire sleeves
Degree of protection (IEC 60529/EN 60529)	IP20
Operating temperature	-25…+60 °C

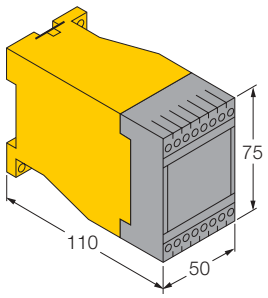

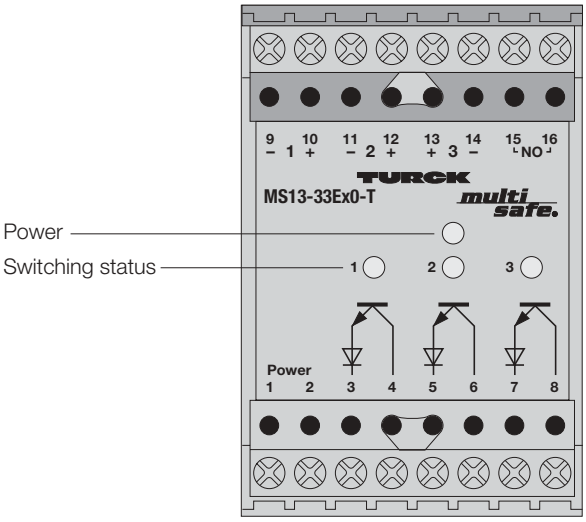

Isolating Switching Amplifier MS13-33Ex0-T 3-channel

- **3-channel isolating switching amplifier**
- **Intrinsically safe input circuits EEx ia**
- **Area of application according to ATEX: II (1) GD, I (M1)**
- **Galvanic isolation between input circuits, output circuits and supply voltage**
- **3 isolated transistor outputs, short-circuit and reverse polarity protected**
- **Input circuit monitoring for wire-break and short-circuit**
- **Selectable NO/NC output function**
- **Universal supply voltage (20..250 VAC/20...125 VDC)**

The MS13-33Ex0-T switching amplifier is a 3-channel device with intrinsically safe input circuits. They can be connected to sensors according to EN 60947-5-6 (NAMUR), variable resistors or potential-free contacts. Each output circuit is provided with one isolated, short-circuit and reverse polarity protected transistor output.

The selected output mode applies to all three channels. Program for normally closed mode (NC/R) by leaving terminals 15/16 open and for normally open mode (NO/A) by linking terminals 15/16.

The green LED on the front cover indicates that the devices are powered. The yellow LEDs indicate the switching status of the outputs.

The input circuits are individually monitored for wire-break and short-circuit. The affected output turns off during an input fault (green LED off).

When mechanical contacts are used as input devices, resistors (II) must be added to the contacts. This will prevent the monitoring control circuit from recognising the mechanical contacts as a wire-break or short-circuit.

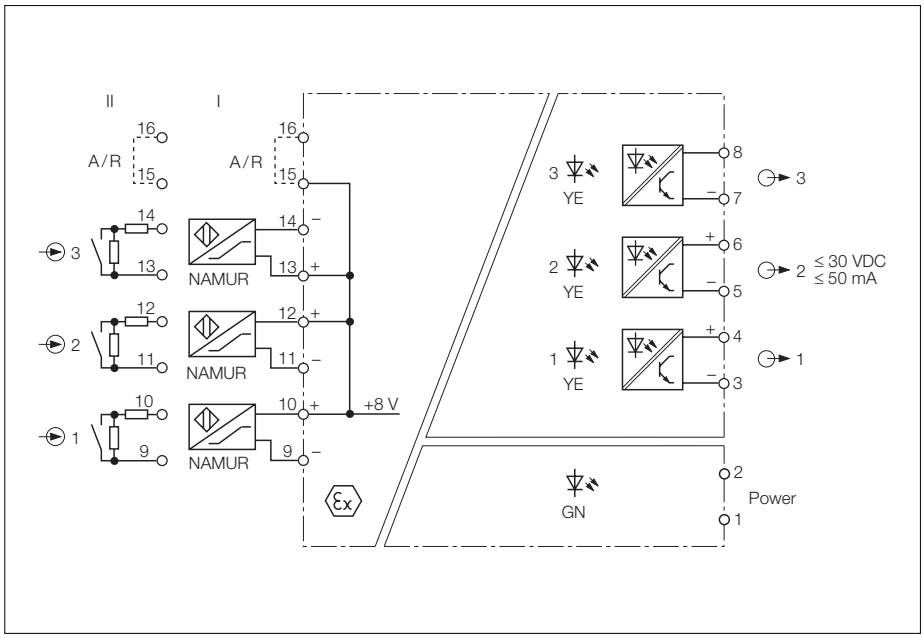

Isolating Switching Amplifier MS13-33Ex0-T

Type	MS13-33Ex0-T
Ident-no.	5433201
Supply voltage U_B	20...250 VAC/20...125 VDC
Line frequency (AC)	40...70 Hz
Power consumption	≤ 3 W
Galvanic isolation	between input circuit, output circuit and supply voltage for 250 V_{rms} test voltage 2.5 kV_{rms}
Input circuits	acc. to EN 60947-5-6 (NAMUR), intrinsically safe according to EN 50020
Operating characteristics	
– Voltage	8 V
– Current	4.5 mA
Switching threshold	1.55 mA
Hysteresis	0.2 mA
Wire-break threshold	≤ 0.1 mA
Short-circuit threshold	R_a approx. 200 Ω
Contact configuration Of mechanical switches with active input circuit monitoring function	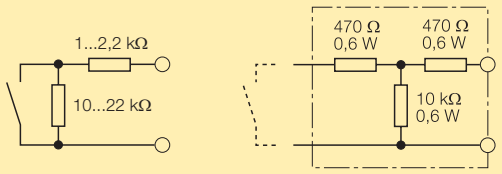 resistor module WM1, ident-no. 0912101
Output circuits	3 transistor outputs, potential-free, short-circuit and reverse polarity protected
Switching voltage	≤ 30 VDC
Switching current	≤ 50 mA
Voltage drop	≤ 2.5 V
Switching frequency	≤ 2 kHz
Ex-approval acc. to certificate of conformity	DMT 01 ATEX E 119
Maximum nominal values	
– No load voltage U_0	11.0 V
– Short-circuit current I_0	55 mA
– Power P_0	150 mW
– Safety voltage U_m	250 VAC/125VDC
Max. external inductances/capacitances L_0/C_0	
– [EEx ia] IIC	1 mH/500 nF
– [EEx ia] IIB	3 mH/2500 nF
– [EEx ia] I	10 mH/10 µF
Marking of device	II (1) GD [EEx ia] IIC I (M1) [EEx ia] I
LED indications	
– Power	green
– Switching status	3 x yellow
Housing	50 mm wide, Polycarbonate/ABS
Mounting	panel mounting or snap-on clamps for top-hat rail (DIN 50022)
Connection	2 x 8 self-lifting pressure plates
Connection profile	≤ 2 x 2.5 mm² or 2 x 1.5 mm² with wire sleeves
Degree of protection (IEC 60529/EN 60529)	IP20
Operating temperature	-25…+60 °C

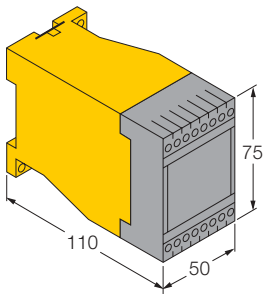

ROTATIONAL SPEED MONITORS/MOTION CONTROLS

Rotational Speed Monitors and Motion Controls Selection Guide

Housing Style *multimodul* *multisafe®* *multicart®*

Housing	multimodul					multisafe									multicart			
Type	MK21-122-R	MK21-122Ex0-R	MK21-122-Ri	MK21-122Ex0-Ri	MK26-22-R	MS21-12Ex0-R	MS22-Ri	MS23-R	MS23-22Ex0-R	MS24-R	MS24-112-R	MS25-Ui	MS27-R	MS28-R	MC25-144Ex0-LRP	MC25-144-LRP		
Functions																		
Rotational speed meter	●	●	●	●			●					●			●	●		
Rotational speed monitor	●	●	●	●		●	●			●	●		●	●	●	●		
Slip monitor					●													
Direction discriminator								●	●									
Rotational speed monitor with pulse scaler															●	●		
PC interface card [1]															●	●		
Operating mode																		
Analogue																		
Digital	●	●	●	●	●	●	●	●	●	●	●	●	●	●	●	●		
Function																		
Underspeed	●	●	●	●		●	●	●		●	●		●	●	●	●		
Overspeed	●	●	●	●		●	●			●	●			●	●	●		
Under- and overspeed	●	●	●	●										●	●	●		
Speed range																		
1:5 … 3 000 min^{-1}											●							
1:5 … 10 000 min^{-1}													●	●				
5 … 25 000 min^{-1}						●												
0.06 …100 000 min^{-1}																		
0.6 …100 000 min^{-1}							●			●		●						
0.06 …120 000 min^{-1}																		
0.06 …150 000 min^{-1}					●			●										
0.06 …600 000 min^{-1}	●	●	●	●											●	●		
Galvanic isolation																		
Input to output																		
Output to supply																		
Input to supply																		
Full galvanic isolation	●	●	●	●	●	●	●	●	●	●	●	●	●	●	●	●		
Input circuit																		
Intrinsically safe according to DIN 50020	●	●	●	●	●	●	●	●	●	●	●	●	●	●	●	●		
NAMUR sensors (EN 60947-5-6)		●		●		●			●						●			
24 VDC, pnp (non-intrinsically safe)	●		●				●	●		●	●	●	●	●	●	●		
Sensor input	●		●				●	●		●	●	●	●	●	●	●		
Input circuit monitoring	●	●	●	●	●		●	●	●	●		●		●	●	●		
Output Circuit																		
Relay, SPDT per channel	2	2	1	1	2	2	1	2	2	1	1		2	2	2	2		
Transistor, pnp															2	2		
Pulse output, pnp	●		●							●		●	●		●	●		
Alarm output										●					●	●		
Current output 0/4…20 mA			●	●			●					●			●	●		
Voltage output 0…10 V												●			●	●		
Supply voltage																		
24 VDC					●										●	●		
115 VAC					●													
230 VAC					●													
Universal power supply	●	●	●	●		●	●	●	●	●	●	●	●	●				
(20…250 VUC)	●		●				●	●		●	●	●	●	●				
(20…250 VAC/20…125 VDC)		●		●		●			●									
Data sheet – see page	7	9	11	13	15	17	19	21	23	25	27	29	31	33	**catalogue *multicart®***			

[1] see section on processor cards

Hans Turck GmbH & Co.KG • D–45466 Mülheim/Ruhr • Tel. 0208/4952-0 • Fax 0208/4952-264 • E-Mail: turckmh@mail.turck-globe.de • www.turck.com

Applications

In the process control industry there are many applications requiring measurement of rotation and oscillating movements. From simple functions such as monitoring speed of rotating shafts and gears, or sensing of turbine rotors, to entire production lines, rotational speed and motion controls provide the answer.

A wide range of devices with various functions are used to cover the complexity of rotational speed and motion control:

- rotational speed meters (conversion of rotational speed values into proportional current or voltage signals)
- rotational speed monitors (overspeed and underspeed detection)
- combined devices (rotational speed monitors with analogue output for automatic control and indicator functions)
- direction discriminators (detection of motion direction)
- slip monitors (monitoring of two shafts for synchronous operation)

Rotational speed monitors are available in modular housings type *multimodul*, *multisafe*® or *multicart*®. Several devices with intrinsically safe input circuits are available for use in hazardous areas.

Principle of operation

Overspeed and underspeed monitors operate on a **pulse-width measurement**. The digital system measures the time between two consecutive pulses and compares it to a defined setpoint (reference value). This enables the device to detect a deviation and activate the output after two pulse indication.

The response of devices based upon the digital pulse principle is inherently very fast. An increase in the number of pulses per revolution (more targets) allows for a quicker response, because the preset (pulses per minute) can be increased.

In devices with analogue output, the calculated time between two pulse indication is directly converted into an analogue signal. This method provides very fast response times. If only the shaft key is monitored and the rotation is slow but varies, the resulting analogue signal can have sudden changes. TURCK's rotational speed monitors use an arithmetic signal steadying method to reduce this effect.

The digital pulse-width measurement is not suited for monitoring input frequencies which are close to zero speed. Nevertheless, the digital pulse-width measurement is the only monitoring principle which provides acceptable response times in applications with low speeds.

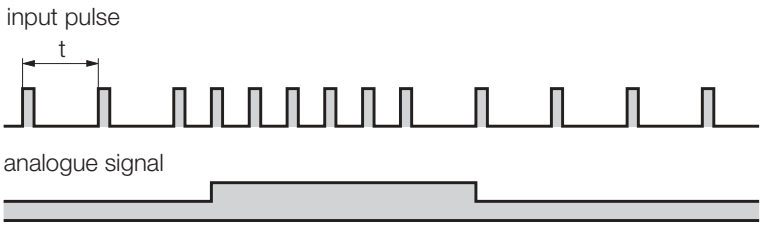

Fig. 1 Pulse-width measurement

Input sources

Non-contact proximity sensors are the most commonly used input source for devices in this field. It is also possible to use 3-wire pnp sensors. Mechanical contacts should not be used due to contact bounce and wear.

NAMUR proximity sensors (EN 60947-5-6) feature a rugged and simple 2-wire design with speeds up to 5 kHz. They are very reliable and have an excellent price-performance ratio. NAMUR sensors may also be installed in hazardous areas when used with an approved amplifier.

Unlike tacho-generators and conventional rotational pulse generators, non-contact sensors require no physical connection to the driving element in order to perform motion detection. In most cases, the speed of a rotating machine part (i.e. shafts, gears, or cams) is monitored directly so that special or additional control elements or relays are not necessary.

Response time

The response time of rotational speed monitors operating on the pulse principle is an inherent delay time, which consists of the internal processing time of the device and the pulse period duration. Devices with relay output have a typical response time of 20 ms to detect a speed deviation and activate the output. Devices with analogue output have a typical response time of 100 ms to detect a speed deviation and provide the output signal if no steadying method is used. The pulse period duration of two Pulse indication has to be added to the a.m. time value to obtain the total response time.

If the number of targets is increased, the pulse period duration (measuring time) is shortened and thus it is possible to achieve relatively short response times in applications with low speed.

Rotational Speed Meters/ Rotational Speed Monitors

Operation modes

If the rotational speed is within the permissible speed range, the output is activated (relay energised, transistor conducting). If an unacceptable deviation occurs, the output de-activates (relay de-energised, transistor disabled).
An input fault (detected by the input circuit monitoring function) and missing supply voltage also lead to a shut down of the output.

The rotational speed monitors provide two monitoring modes: *underspeed* and *overspeed* monitoring. The respective mode is either fixed or jumper programmable or can be adjusted when assigning the device's parameters.

A limit value ($f_{limit\ value}$) must be defined and set to distinguish between admissible and unacceptable speeds. A switching hysteresis is needed to cause the rotational speed monitor to switch exactly at the defined speed. Setting of the limit value and of the switching hysteresis differs between the three different basic designs and can be taken from the respective data sheets.
The following settings are available: speed limit value with a fixed switching hysteresis, speed limit value and switching hysteresis (as a percentage of the limit value), switch-on and switch-off time of the output at a defined speed.

Underspeed monitoring

If the input frequency exceeds the limit value the system is operating correctly.

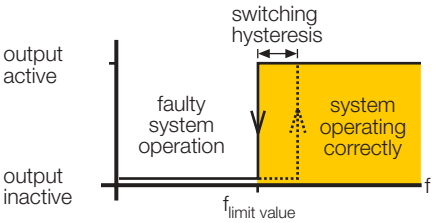

Overspeed monitoring

If the input frequency is below the preset limit value, the system is operating correctly.

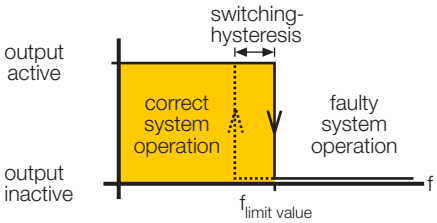

Underspeed and overspeed detection

(window function)

This mode is a combination of underspeed and overspeed monitoring. If the input frequency is within the defined range (window) of the setpoint, the system is operating correctly. This mode enables selection of several parameters which are explained in the respective data sheets.

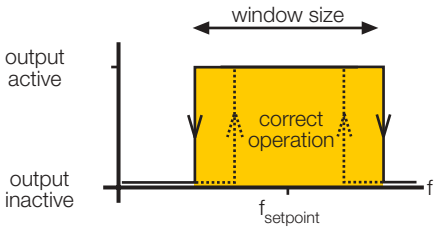

Slip monitoring

These devices are designed to compare two pulse sequences (e.g. from two rotating parts on motors, gears, turbines etc.) for slip/synchronous operation of belt-driven systems by means of sensors on both shafts. Slip monitors evaluate the deviation (in percent) of both rotational speeds. If the deviation (slip) exceeds the defined limit value, the output changes state.

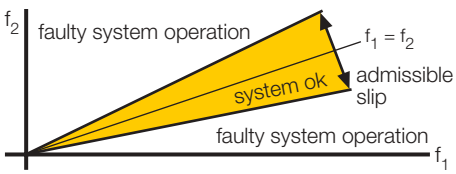

Direction discriminators

Direction discriminators are used to detect forward or reverse motion of a shaft. For this two sensors are needed which have to be attenuated in a pre-defined order: first one of the sensors is damped, then both are damped simultaneously for at least 1 ms and finally the remaining sensor is attenuated.

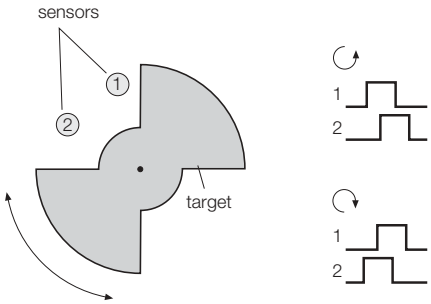

This can be achieved by an especially shaped target. If the motion direction is detected, the respective relay is energised. Further specifications can be taken from the data sheets.

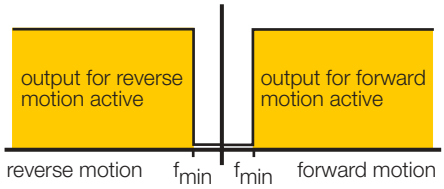

Rotational speed meters

Rotational speed meters convert the measured speed value into a proportional and standardised analogue current or voltage value of 0/4...20 mA or 0...10 V.

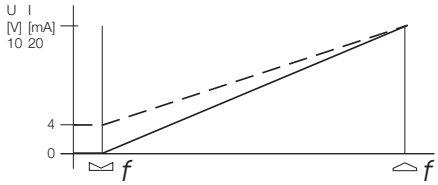

Hans Turck GmbH & Co.KG • D–45466 Mülheim/Ruhr • Tel. 0208/4952-0 • Fax 0208/4952-264 • E-Mail: turckmh@mail.turck-globe.de • www.turck.com

Start-up delay

In units designed for *underspeed monitoring*, it is possible to adjust a start-up delay time during which the output relays are forced to remain energised. This prevents underspeed indications and system shutdown during the start-up phase.
The start-up time delay is triggered by a potential-free contact (auxiliary contact of the motor starter) or by applying power to the device.

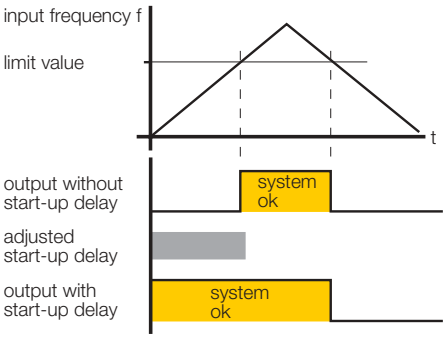

Start-up alarm

A start-up alarm is required in drive systems where an increase in speed could cause a faulty operation (e.g. variable frequency based motors and D.C. drives).

In units designed for *underspeed monitoring*, it is not critical if input signals are not transmitted due to faulty control elements (wire-break, short-circuit or incorrectly aligned sensors etc.). In this case the output relays automatically de-energise.

In units designed for *overspeed monitoring*, the alarm will not be activated if the pulse indication are missing. This is especially critical in cases of missing pulse indication as the monitoring device is not able to react and this condition would remain undetected for some time.

For *overspeed monitoring* the start-up time delay is not required. Therefore, the start-up time delay function of the MS24-R device has been designed as a start-up alarm. This alarm is activated by means of an auxiliary contact on the motor starter; it monitors the pulse indication and activates the alarm relay when no pulse indication are detected.

Overrange protection

Speed monitors for overrange indication have an integrating filter incorporated into the input circuitry to protect against signal interference. Any input frequencies in excess of the upper threshold cannot be processed by the speed monitoring device and the device indicates faulty system operation.

Input frequencies which exceed the operation range but are below the threshold frequency do not generate an error indication. Input rates in excess of the threshold value are not detected.

For safety reasons a speed monitor should only be operated within the specified operation range.

Signal attenuation factor (AVR)

For overspeed monitoring, some speed monitors can be pre-programmed to steady the signal by forming a floating average from a preset adjustment factor. The floating average is formed over the adjusted number of pulses and used to calculate the rotational speed.
This signal steadying function is especially useful when operating devices with analogue output (current or voltage). The adjusted factor should match the number of targets per rotation.

Input circuit monitoring

Many rotational speed monitors feature input circuit monitoring. If a short-circuit or wire-break condition occurs in the sensor line of the connected NAMUR sensor, the relay output of the device de-energises and thus generates an error indication.
If a 3-wire sensor is connected, it is only possible to monitor the current consumption of the sensor. If this value drops below 0.2 mA, the relay is de-energised.

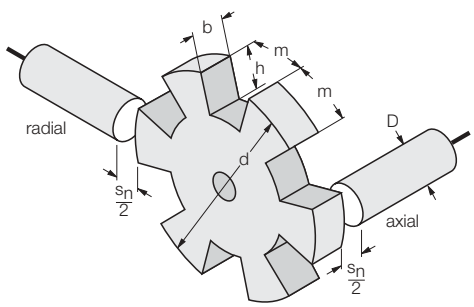

D = diameter of proximity sensors
m = tooth/gap width
d = disc diameter
s_n = nominal sensing range
$\frac{s_n}{2}$ = recommended mounting distance
h = tooth depth
$h \geq m$ with axial mounting of sensor
$h \geq 2 \times s_n$ with radial mounting of sensor

Fig. 3 Radial and axial mounting of a sensor

Rotational Speed Meters
Rotational Speed Monitors

Modification of rotational speed monitors according to customer applications

To achieve fast response times of the monitoring devices usually several pulses per shaft revolution are transferred to the device. This method is not compatible with devices equipped with a display for actual speed indications. There are several possibilities to achieve accordance by setting a certain factor in the *multimodul* and *multicart®* devices. Indication and adjustment of limit values will then correspond to the number of revolutions per shaft. When using *multisafe®* devices the user must set the number of revolutions multiplied by the number or pulses per rotation.

Quite often display and measuring units other than Hz are required (e.g. min^{-1}, a converted speed value or l/h) when using a flow rate monitor. *multimodul* and *multicart®* devices with display enable programming of a conversion factor. Thus the display and settings can be adapted perfectly to the application.

Guidelines for rotational speed monitoring via inductive sensors

When inductive proximity sensors are used as input devices, the following points should be observed (contact TURCK for more specific examples):

- When using mild steel targets, the sensors must be positioned at half of the nominal sensing range.
- The correction factors for non-ferrous targets must also be considered (see sensors catalogue).
- The target surface and the distance between two surfaces should not be smaller than the sensor diameter.
- In high speed applications, it is advisable to use a larger target and to increase the distance between the targets (see EN 50010). The closer the sensor operates to its limit frequency, the larger the safety distance between the targets and the larger the target should be.
- Flush and non-flush mounted sensors require different targets due to their differing oscillating fields. Non embeddable (unshielded) units require larger metal-free areas around the sensing face (see sensors catalogue).
- The targets should be positioned symmetrically to enable the speed meter to provide a steady output signal. Subsequent signal steadying may reduce sudden signal variations of the analogue output, but cannot compensate this effect completely.
- Despite the shaft's bearing it can happen that shaft play impairs rotational speed monitoring. Therefore it is necessary to consider shaft play when mounting the sensors in their two different positions. (see page 2-5, fig. 3)
- In case of axial play in conjunction with an axially mounted sensor, it must be ensured that the shaft cannot damage the sensor. On the other hand care must be taken not to increase the distance between sensor and shaft to such an extent that detection is impossible. When using a radially mounted sensor it must be ensured that the target is broad enough to attenuate the sensor sufficiently inspite of axial play. In case of radial play the same considerations should be taken into account, even though radial play is lesser than axial play.
- When installing inductive sensors, care must be taken that metal parts, which are not part of the target, do not reach into the detection range. Different mounting distances for radially and axially mounted sensors must be observed.

Installation guidelines

The sensor-specific installation requirements are listed in the according sensor catalogues (switching distance, ambient conditions etc). It is essential to meet these requirements to ensure correct operation.

When laying sensor cables, it is requested to observe the following guidelines:
- the sensor cable should be routed separately from the power cable
- prevent electro-magnetic interferences
- if long cables are needed, it is recommended to use shielded and earthed cables
- the line resistance may not exceed 50 Ω (EN 60947-5-6); the maximum cable length is determined by the cable's cross-section:

$$l = \frac{R \times S}{\delta}$$

R = line resistance [Ω]
S = cable cross-section [mm^2]
δ = resistivity [Ω x mm^2/m]
l = cable length [m]

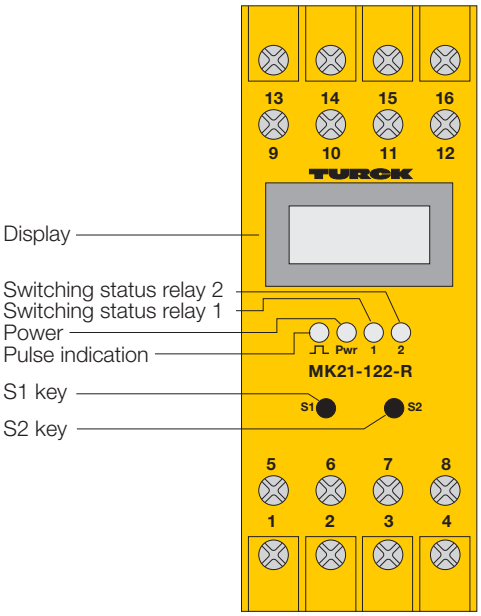

Rotational Speed Monitor MK21-122-R 1-channel

2

- **1-channel rotational speed monitor**
- **Overspeed and underspeed detection plus window function**
- **For use with sensors according to EN 60947-5-6 (NAMUR), 3-wire sensors and external signal sources with pulse levels 5...30 VDC**
- **Line monitoring of NAMUR sensors**
- **Potential-free pulse output**
- **Detection range 1 mHz...10 kHz (0.06...600 000 pulses/min^{-1})**
- **Simple menu-guided parameterisation**
- **Full galvanic isolation**
- **2 relay outputs, each with one SPDT contact**
- **Universal supply voltage (20...250 VUC)**

The MK21-122-R is a rotational speed monitor designed to monitor pulse sequences from rotating shafts on motors, gears, turbines etc., for overspeed and underspeed conditions. A display located on the front cover indicates the actual speed.

Sensors per EN 60947-5-6 (NAMUR), 3-wire sensors or external signal sources may be used for signal detection. When using NAMUR sensors, line monitoring for short-circuit and/or wire-break conditions maybe adjusted. If there is an error in the input circuit, the relays de-energise and the yellow pulse LED changes to red. 3-wire pnp sensors can be powered with 12 V (≤ 20 mA) by the rotational speed monitor. External signal sources must have a signal range from 5...30 VDC. The potential-free pulse output provides the input signal for additional processors.

To provide fast response times for applications with relatively low speed, the device operates on a digital pulse principle. High speed monitoring is based on a time window. In low-speed applications, the response time depends on the pulse period.

Device parameterisation is accomplished with two push buttons. The settings are indicated via the display. Both relay outputs can be programmed separately for either overspeed or underspeed detection or a window function as a combination of both. The switching hysteresis is defined by the adjustable switch ON and OFF points. Further it is possible to adjust a separate switch-off time for each output to prevent the device from shutting down due to sudden short-term changes of the frequency.

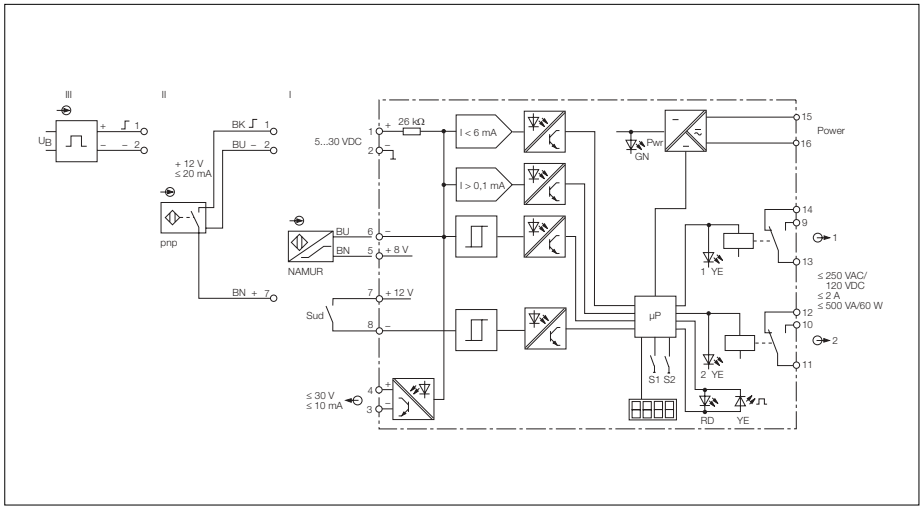

Rotational Speed Monitor MK21-122-R

An adjustable latching function prevents the output relay from re-energizing.

The relays operate in the normally open mode; i.e. the relay is energised if the speed is within the acceptable range.

Output 2 may also be used exclusively as an alarm output. The relay will then only de-energise if there is an input circuit error or a power failure.

In the underspeed monitoring mode, it is further possible to adjust a start-up time delay (AU-time) during which the output relay is constantly energised. Consequently underspeed indications are inhibited during system start-up. There are two options: either the start-up time delay is immediately disabled upon an overrange of the set-point or the adjusted start-up time delay is simply a time value without a setpoint. The start-up time delay is activated by linking terminals 7 and 8 or by applying power to the device after the terminals have been linked.

The actual speed and the limit value settings are displayed in Hz. By adjusting a time basis and programming the number of pulses per rotation, it is possible to adjust all settings and the display to the required measuring unit. Suppose, the display should be in min^{-1} instead of Hz, the time-based factor adjustment would be 60.

For low speed conditions, it is possible to adjust an input delay during which unwanted signals (e.g. due to contact bouncing) are not evaluated.

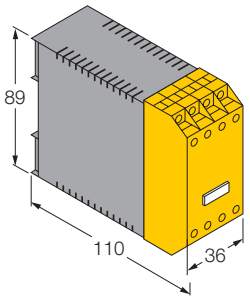

Type	MK21-122-R
Ident-no.	7543055
Supply voltage U_B	20...250 VUC
Line frequency (AC)	40...70 Hz
Power consumption	≤ 2.5 W
Galvanic isolation	between input circuit, output circuit and supply voltage for 250 V_{rms}, test voltage 2.5 kV_{rms}
Rotational speed monitoring	overspeed/underspeed
Monitoring range/adjustable range	0.06...600 000 min^{-1} (digitally adjustable)
Input frequency	≤ 1 200 000 min^{-1} (20 kHz)
Pulse duration	≥ 0.02 ms
Pulse pause	≥ 0.02 ms
Start-up time delay	0…1000 s (adjustable)
Input circuits	
NAMUR input	to EN 60947-5-6, (NAMUR)
– Operating values	U_0 = 8.2 V; I_k = 8.2 mA
– Switching threshold	1.55 mA
– Switching hysteresis	0.2 mA
– Wire-break threshold	≤ 0.1 mA
– Short-circuit threshold	≥ 6 mA
3-wire sensor	
– Voltage	12 V
– Current (sensor no-load current)	≤ 20 mA
External signal source	
– 0-Signal	0...3 V
– 1-Signal	5...30 V
– Input resistance	26 kΩ
Output circuits	two relays
Relay output	2 SPDT contacts
– Switching voltage	≤ 250 V
– Switching current	≤ 2 A
– Switching capacity	≤ 500 VA/60 W
– Switching frequency	≤ 5 Hz
– Contact material	Ag-alloy + 3 µm Au
Pulse output	
– External voltage	< 30 V
– Current	≤ 10 mA
LED indications	
Power	green
Switching status	2 x yellow
Pulse indication (dual colour LED)	yellow – error: red
Display	LCD-Display (four digits)
Housing	16-pole, 36 mm wide, Polycarbonate/ABS flammability class V-0 per UL 94
Mounting	panel mounting or snap-on clamps for top-hat rail (DIN 50022)
Connection	screw terminals with self-lifting pressure plates
Connection profile	≤ 2 x 2.5 mm^2 or 2 x 1.5 mm^2 with wire sleeves
Protection degree (IEC 60529/EN 60529)	IP20
Temperature range	-25…+60 °C

Hans Turck GmbH & Co.KG • D–45466 Mülheim/Ruhr • Tel. 0208/4952-0 • Fax 0208/4952-264 • E-Mail: turckmh@mail.turck-globe.de • www.turck.com

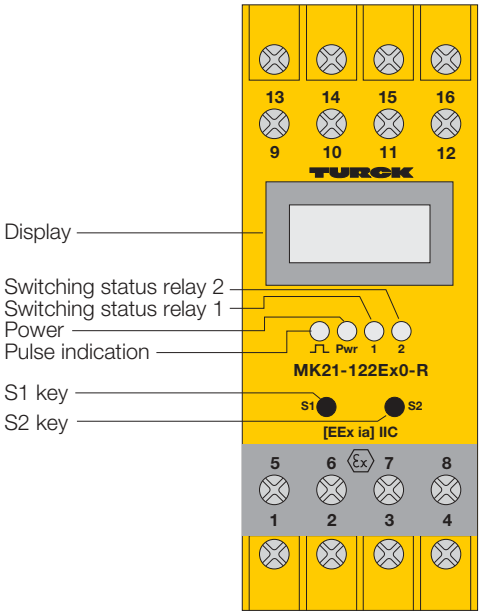

Rotational Speed Monitor MK21-122Ex0-R 1-channel

2

- **1-channel rotational speed monitor**
- **Overspeed and underspeed detection plus window function**
- **Intrinsically safe input circuit EEx ia**
- **Area of application according to ATEX: II (1) GD**
- **For use with intrinsically safe sensors according to EN 60947-5-6 (NAMUR)**
- **Line monitoring of NAMRUR sensors**
- **Detection range 1 mHz...10 kHz (0.06...600 000 pulses/min^{-1})**
- **Simple menu-guided parameterisation**
- **Full galvanic isolation**
- **2 relay outputs, each with one SPDT contact**
- **Universal supply voltage (20...250 VAC/20...125 VDC)**

The MK21-122-Ex0-R is a rotational speed monitor designed to monitor pulse sequences from rotating shafts on motors, gears, turbines etc., for overspeed and underspeed conditions. A display located on the front cover indicates the actual speed.

Intrinsically safe sensors per EN 60947-5-6 (NAMUR) may be user for signal detection. The input circuit features intrinsic safety. Line monitoring for short-circuit and/or wire-break conditions can be adjusted.

If there is an error in the input circuit, the relays de-energise and the yellow pulse LED changes to red.

To provide fast response times for applications with relatively low speed, the device operates on a digital pulse principle. High speed monitoring is based on a time window. In low-speed applications, the response time depends on the pulse period.

Device parameterisation is accomplished with two push buttons. The settings are indicated via the display.

Both relay outputs can be programmed separately for either overspeed or underspeed detection or a window function as a combination of both. The switching hysteresis is defined by the adjustable switch ON and OFF points. Further it is possible to adjust a separate switch-off time for each output to prevent the device from shutting down due to sudden short-term changes of the frequency.

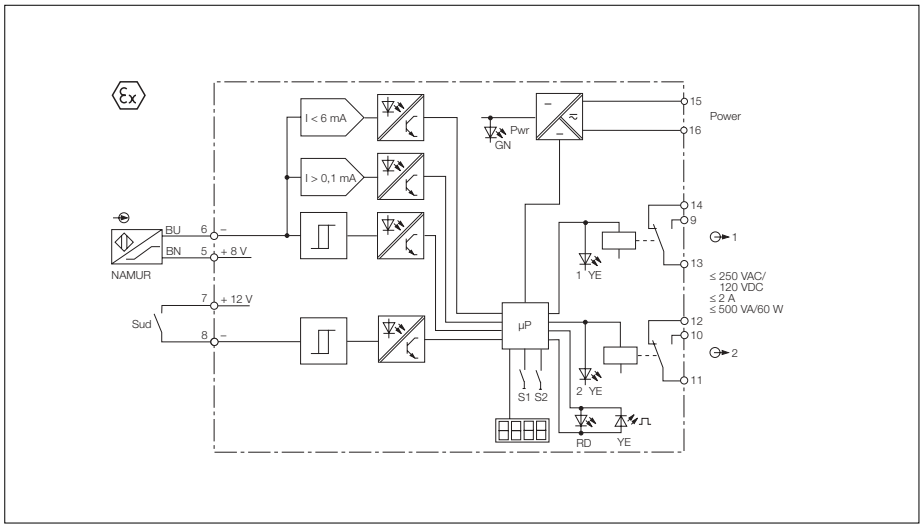

Rotational Speed Monitor MK21-122Ex0-R

An adjustable latching function prevents the output relay from re-energising.

The relays operate in the normally open mode; i.e. the relay is energised if the speed is within the acceptable range.

Additionally, output 2 may be used exclusively as an alarm output. The relay will then only de-energise if there is an input circuit error or a power failure.

It is further possible to adjust a start-up time delay (AU-time) during which the output relay is constantly energised. Consequently underspeed indications are inhibited during system start-up. There are two options: either the start-up time delay is immediately disabled upon an overrange of the set-point or the adjusted start-up time delay is simply a time value without a setpoint. The start-up time delay is activated by linking intrinsically safe terminals 7 and 8 or by applying power to the device after the terminals have been linked.

The actual speed and the limit value settings are displayed in Hz. By adjusting a time basis and programming the number of pulses per rotation, it is possible to adjust all settings and the display to the required measuring unit. Suppose, the display should be in min^{-1} instead of Hz, the time-based factor adjustment would be 60.

For low speed conditions, it is possible to adjust an input delay during which unwanted signals (e.g. due to contact bouncing) are not evaluated.

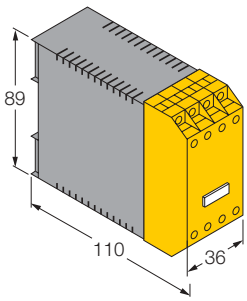

Type	MK21-122Ex0-R
Ident-no.	7543054
Supply voltage U_B	20...250 VAC / 20...125 VDC
Line frequency (AC)	40...70 Hz
Power consumption	≤ 2.5 W
Galvanic isolation	between input circuit, output circuit and supply voltage for 250 V_{rms}, test voltage 2.5 kV_{rms}
Rotational speed monitoring	underspeed/overspeed
Monitoring range/adjustable range	0.06...600 000 min^{-1} (digitally adjustable)
– Input frequency	≤ 1 200 000 min^{-1} (20 kHz)
Pulse duration	≥ 0.02 ms
Pulse pause	≥0.02 ms
Start-up time delay	0…1000 s (adjustable)
Input circuits	
NAMUR input	to EN 60947-5-6, (NAMUR)
– Operating values	U_0 = 8.2 V; I_k = 8.2 mA
– Switching threshold	1.55 mA
– Switching hysteresis	0.2 mA
– Wire-break threshold	≤ 0.1 mA
– Short-circuit threshold	≥ 6 mA
Ex approval acc. to certificate of conformity	PTB 97 ATEX 2240
Max. values	
– No-load voltage U_0	13 V
– Short-circuit current I_0	30 mA
– Safety voltage U_m	250 VAC/125 VDC
Max. external inductances/capacitances L_0/C_0	
– [EEx ia] IIC	40 mH/1 µF
– [EEx ia] IIB	150 mH/6.2 µF
Marking of the device	II (1) GD [EEx ia] IIC
Output circuits	two relays
Relay output	2 SPDT contacts
– Switching voltage	≤ 250 V
– Switching current	≤ 2 A
– Swichting capacity	≤ 500 VA/60 W
– Switching frequency	≤ 5 Hz
– Contact material	Ag-alloy + 3 µm Au
LED indications	
Power	green
Switching status	2 x yellow
Pulse indication (dual colour LED)	yellow – error: red
Display	LCD-Display (four digits)
Housing	16-pole, 36 mm wide, Polycarbonate/ABS flammability class V-0 per UL 94
Mounting	panel mounting or snap-on clamps for top-hat rail (DIN 50022)
Connection	screw terminals with self-lifting pressure plates
Connection profile	≤ 2 x 2.5 mm^2 or 2 x 1.5 mm^2 with wire sleeves
Protection degree (IEC 60529/EN 60529)	IP20
Temperature range	-25…+60 °C

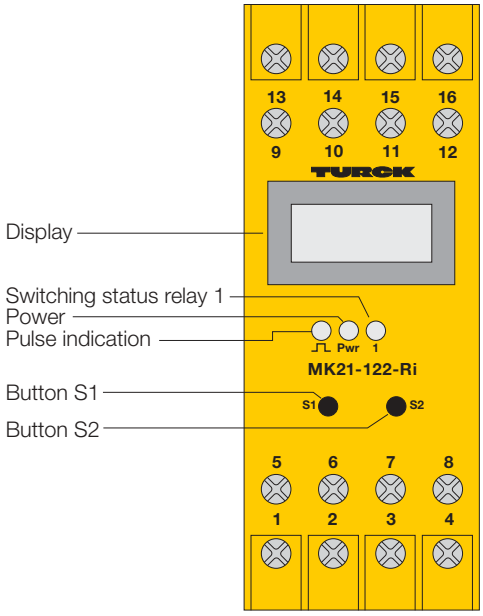

Rotational Speed Monitor with Frequency-Current Converter MK21-122-Ri 1-channel

2

- **1-channel rotational speed monitor with frequency-current converter**
- **Overspeed and underspeed detection plus window function**
- **For use with sensors according to EN 60947-5-6 (NAMUR), 3-wire sensors and external signal sources with a pulse level 5...30 VDC**
- **Line monitoring of NAMRUR sensors**
- **Detection range 1 mHz...10 kHz (0.06...600 000 pulses/min[1])**
- **Simple menu-guided parameterisation**
- **Full galvanic isolation**
- **Relay output with one SPDT contact**
- **Analogue current output: 0...20 mA / 4...20 mA**
- **Potential-free pulse output**
- **Universal supply voltage (20...250 VUC)**

The MK21-122-Ri is a rotational speed monitor designed to monitor pulse sequences from rotating shafts on motors, gears, turbines etc., for overspeed and underspeed conditions relative to pre-adjusted limit values. The analogue output provides a current signal proportional to the rotational speed for further processing. A display located on the front cover indicates the actual speed.

Sensors per EN 60947-5-6 (NAMUR), 3-wire sensors or external signal sources may be used for signal detection. Line monitoring for short-circuit and/or wire-break conditions can be adjusted when using NAMUR sensors. If there is an error in the input circuit, the relay de-energises, the analogue outputs goes to either 0 mA or 24 mA (depending on setting) and the yellow pulse LED changes to red. 3-wire pnp sensors can be powered with 12 V (≤ 20 mA) by the rotational speed monitor. External signal sources must have a signal range from 5...30 VDC. The potential-free pulse output provides the input signal for additional processors.

To provide fast response times for applications with relatively low speed, the device operates on a digital pulse principle. High speed monitoring is based on a time window. In low-speed applications, the response time depends on the pulse period.

Device parameterisation is accomplished with two push buttons. The settings are indicated via the display. The relay output can be programmed for overspeed or underspeed detection, or a window function, or a combination of both. The switching hysteresis is defined by the adjustable switch ON and OFF points.

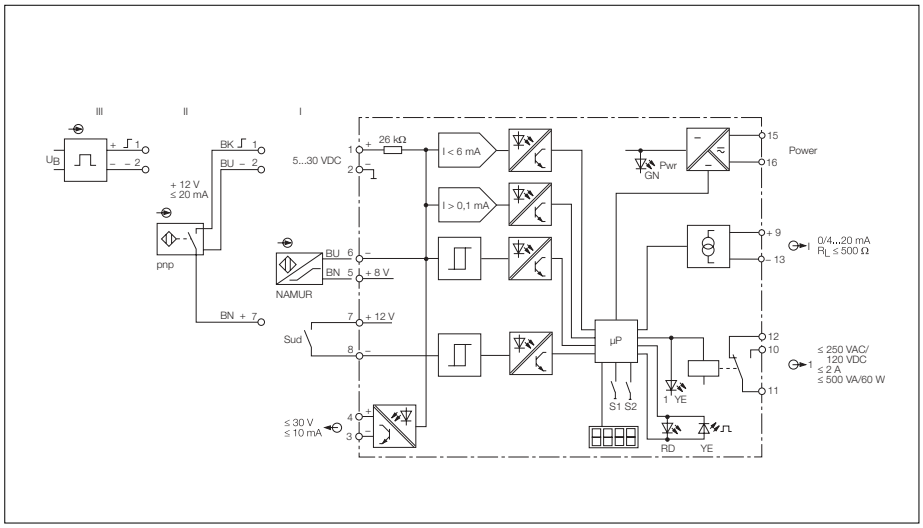

Rotational Speed Monitor MK21-122-Ri

The relay operates in the normally open mode; i.e. the relay is energised if the speed is within the acceptable range. The relay may also be used as an alarm output. The relay will then de-energise if there is an input circuit error or a power failure.

In the underspeed monitoring mode, it is possible to adjust a start-up time delay (AU-time) during which the output relay is constantly energised. Consequently underspeed indications are inhibited during system start-up. The start-up time delay is activated by linking terminals 7 and 8 or by applying power to the device after the terminals have been linked.

The upper und lower range value can be freely adjusted. Within the measuring range (selectable ranges 0...20 mA or 4...20 mA), the frequency is converted linearly into a current value. A damping time, during which the current output follows a change of frequency with a defined delay, is adjustable.

The actual speed and the limit value settings are displayed in Hz. By adjusting a time basis and programming the number of pulses per rotation, it is possible to adjust all settings and the display to the required measuirng unit. Suppose, the display should be in min^{-1} instead of Hz, the time-based factor adjustment would be 60.

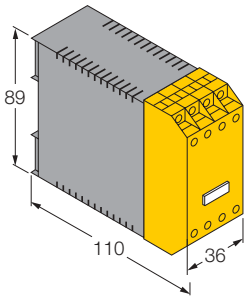

Type	MK21-122-Ri
Ident-no.	7543056
Supply voltage U_B	20...250 VUC
Line frequency (AC)	40...70 Hz
Power consumption	≤ 2.5 W
Galvanic isolation	between input circuit, output circuit and supply voltage for 250 V_{rms}, test voltage 2.5 kV_{rms}
Rotational speed monitoring	underspeed/overspeed
Monitoring range/adjustable range	0.06...600 000 min^{-1} (digitally adjustable)
– Input frequency	≤ 1 200 000 min^{-1} (20 kHz)
Pulse duration	≥ 0.02 ms
Pulse pause	≥ 0.02 ms
Start-up time delay	0…1000 s (adjustable)
Input circuits	
NAMUR input	to EN 60947-5-6, (NAMUR)
– Operating values	U_0 = 8.2 V; I_k = 8.2 mA
– Switching threshold	1.55 mA
– Switching hysteresis	0.2 mA
– Wire-break threshold	≤ 0.1 mA
– Short-circuit threshold	≥ 6 mA
3-wire sensor	
– Voltage	12 V
– Current (sensor no-load current)	≤ 20 mA
External signal source	
– 0-Signal	0...3 V
– 1-Signal	5...30 V
– Input resistance	26 kΩ
Output circuits	1 relay
Relay output	1 SPDT contact
– Switching voltage	≤ 250 V
– Switching current	≤ 2 A
– Switching capacity	≤ 500 VA/60 W
– Switching frequency	≤ 5 Hz
– Contact material	Ag-alloy + 3 µm Au
Analogue output	
– Current source	0/4...20 mA
– Load	≤ 500 Ω
Pulse output	
– External voltage	< 30 V
– Current	≤ 10 mA
LED indications	
Power	green
Switching status	2 x yellow
Pulse indication (dual colour LED)	yellow – error: red
Display	LCD-Display (four digits)
Housing	16-pole, 36 mm wide, Polycarbonate/ABS flammability class V-0 per UL 94
Mounting	panel mounting or snap-on clamps for top-hat rail (DIN 50022)
Connection	screw terminals with self-lifting pressure plates
Connection profile	≤ 2 x 2.5 mm^2 or 2 x 1.5 mm^2 with wire sleeves
Protection degree (IEC 60529/EN 60529)	IP20
Temperature range	-25…+60 °C

 Hans Turck GmbH & Co.KG • D–45466 Mülheim/Ruhr • Tel. 0208/4952-0 • Fax 0208/4952-264 • E-Mail: turckmh@mail.turck-globe.de • www.turck.com

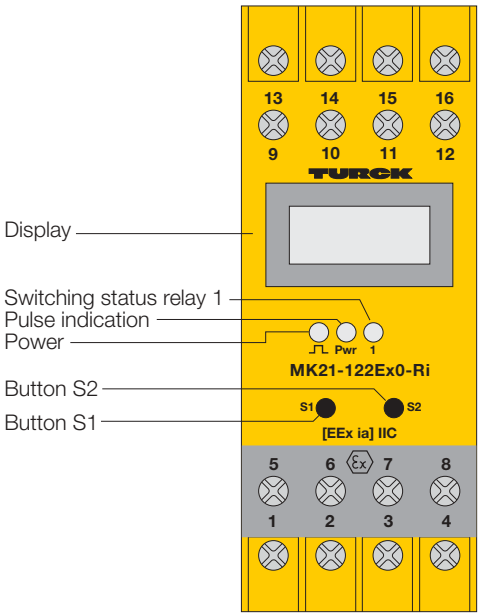

Rotational Speed Monitor with Frequency-Current Converter MK21-122Ex0-Ri 1-channel

2

- **1-channel rotational speed monitor with frequency-current converter**
- **Overspeed and underspeed detection plus window function**
- **Intrinsically safe input circuit EEx ia**
- **Area of application according to ATEX: II (1) GD**
- **For use with intrinsically sensors according to EN 60947-5-6 (NAMUR)**
- **Line monitoring of NAMUR sensors**
- **Detection range 1 mHz...10 kHz (0.06...600 000 pulses/min[1])**
- **Simple menu-guided parameterisation**
- **Full galvanic isolation**
- **Relay output with one SPDT contact**
- **Analogue current output: 0...20 mA / 4...20 mA**
- **Universal supply voltage (20...250 VAC/20...125 VDC)**

The MK21-122Ex0-Ri is a rotational speed monitor designed to monitor pulse sequences from rotating shafts on motors, gears, turbines etc., for overspeed and underspeed conditions relative to pre-adjusted limit values. The analogue output provides a current signal proportional to the rotational speed for further processing. A display located on the front cover indicates the actual speed.

Intrinsically safe sensors per EN 60947-5-6 (NAMUR) may be used for signal detection. The input circuit features intrinsic safety. Line monitoring for short-circuit and/or wire-break conditions can be adjusted. If there is an error in the input circuit, the relay de-energises, the analogue outputs changes to either 0 mA or 24 mA (depending on setting) and the yellow pulse LED changes to red.

To provide fast response times for applications with relatively low speed, the device operates on a digital pulse principle. High speed monitoring is based on a time window. In low-speed applications, the response time depends fully on the pulse period.

Device parameterisation is accomplished with two push buttons. The settings are indicated via the display.

The relay output can be programmed either for overspeed or underspeed detection or a window function as a combination of both. The switching hysteresis is defined by the adjustable switch ON and switch OFF points.

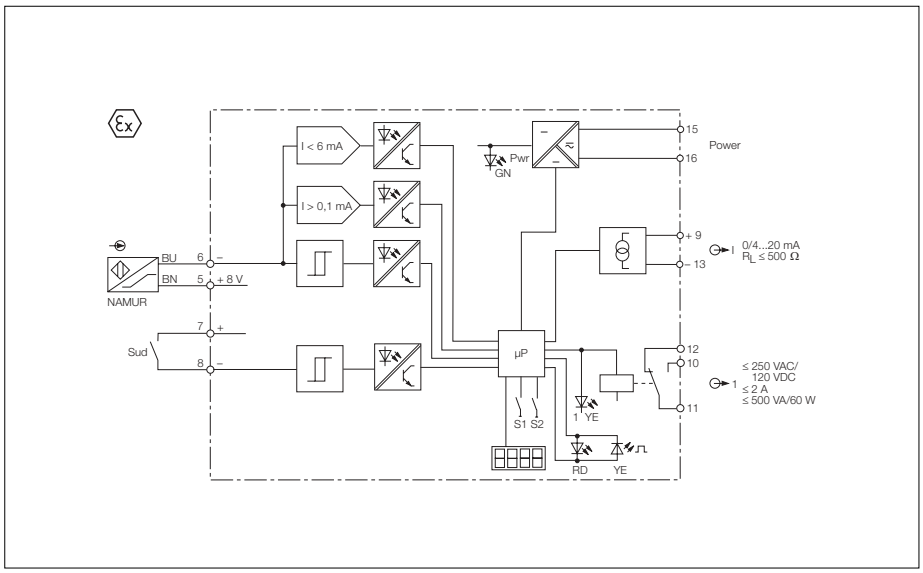

Rotational Speed Monitor MK21-122Ex0-Ri

The relay operates in the normally open mode; i.e. the relay is energised if the speed is within the acceptable range. The relay may also be used as an alarm output. The relay will then de-energise if there is an input circuit error or a power failure.

In the underspeed monitoring mode, it is possible to adjust a start-up time delay (AU-time) during which the output relay is constantly energised. Consequently underspeed indications are inhibited during system start-up. The start-up time delay is activated by linking intrinsically safe terminals 7 and 8 or by applying power to the device after the terminals have been linked.

The upper und lower range value can be freely adjusted. Within the measuring range (selectable ranges 0...20 mA or 4...20 mA), the frequency is converted linearly into a current value. A damping time, during which the current output follows a change of frequency with a defined delay, is adjustable.

The actual speed and the limit value settings are displayed in Hz. By adjusting a time basis and programming the number of pulses per rotation, it is possible to adjust all settings and the display to the required measuring unit. Suppose, the display should be in min^{-1} instead of Hz, the time-based factor adjustment would be 60.

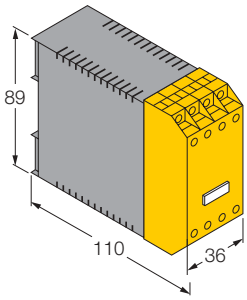

Type	MK21-122Ex0-Ri
Ident-no.	7543053
Supply voltage U_B	20...250 VAC / 20...125 VDC
Line frequency (AC)	40...70 Hz
Power consumption	≤ 2.5 W
Galvanic isolation	between input circuit, output circuit and supply voltage for 250 V_{rms}, test voltage 2.5 kV_{rms}
Rotational speed monitoring	underspeed/overspeed
Monitoring range/adjustable range	0.06...600 000 min^{-1} (digitally adjustable)
Input frequency	≤ 1 200 000 min^{-1} (20 kHz)
Pulse duration	≥ 0.02 ms
Pulse pause	≥ 0.02 ms
Start-up time delay	0…1000 s (adjustable)
Input circuits	
NAMUR input	to EN 60947-5-6, (NAMUR)
– Operating values	U_0 = 8.2 V; I_k = 8.2 mA
– Switching threshold	1.55 mA
– Switching hysteresis	0.2 mA
– Wire-break threshold	≤ 0.1 mA
– Short-circuit threshold	≥ 6 mA
Ex approval acc. to certificate of conformity	PTB 97 ATEX 2240
Max. values	
– No-load voltage U_0	13 V
– Short-circuit current I_0	30 mA
– Safety voltage U_m	250 VAC/125 VDC
Max. external inductances/capacitances L_0/C_0	
– [EEx ia] IIC	40 mH/1 µF
– [EEx ia] IIB	150 mH/6.2 µF
Marking of the device	II (1) GD [EEx ia] IIC
Output circuits	
Relay output	1 SPDT contact
– Switching voltage	≤ 250 V
– Switching current	≤ 2 A
– Switching capacity	≤ 500 VA/60 W
– Switching frequency	≤ 5 Hz
– Contact material	Ag-alloy + 3 µm Au
Analogue output	
– Current source	0/4...20 mA
– Load	≤ 500 W
LED indications	
Power	green
Switching status	2 x yellow
Pulse indication (dual colour LED)	yellow – error: red
Display	LCD-Display (four digits)
Housing	16-pole, 36 mm wide, Polycarbonate/ABS flammability class V-0 per UL 94
Mounting	panel mounting or snap-on clamps for top-hat rail (DIN 50022)
Connection	screw terminals with self-lifting pressure plates
Connection profile	≤ 2 x 2.5 mm^2 or 2 x 1.5 mm^2 with wire sleeves
Protection degree (IEC 60529/EN 60529)	IP20
Temperature range	-25…+60 °C

 Hans Turck GmbH & Co.KG • D–45466 Mülheim/Ruhr • Tel. 0208/4952-0 • Fax 0208/4952-264 • E-Mail: turckmh@mail.turck-globe.de • www.turck.com

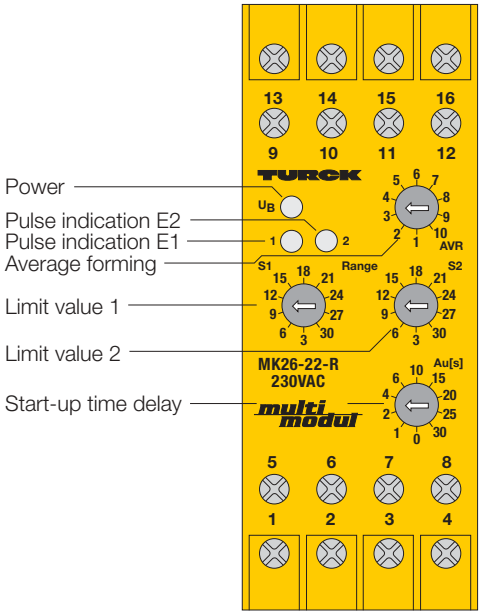

Slip Monitor
MK26-22-R/24VDC
MK26-22-R/230VAC
1-channel

2

- **1-channel slip monitor**
- **Rotational speed monitoring of two rotating parts for slip/ synchronous operation**
- **For use with sensors according to EN 60947-5-6 (NAMUR)**
- **Operating range up to 150 000 min^{-1}**
- **Detection range 3...30 % slip**
- **Simple parameterisation:**
  - **Two independent switch points (limit values)**
  - **Setting of limit values in %**
  - **Selectable NO/NC relay output functions**
  - **Start-up time delay**
  - **Signal steadying (average forming)**
- **Galvanic isolation between input circuit, output circuit and supply voltage**
- **2 relay outputs, each with one SPDT contact**

The MK26-22-R is a rotational speed monitor designed to compare two pulse sequences (e.g. from two rotating parts on motors, gears, turbines etc.) and to monitor these sequences for slip/synchronous operation. This makes the device especially suitable for belt-drive and conveyor belt monitoring.
To monitor slip, i.e the difference between the two rotational speeds, two independent limit values can be adjusted.Thus one relay output can be used for alarm indications and the other relay output for shut-down functions.
Each limit value can be adjusted separately via a rotary switch in a range of 3...30 % in ten steps.

The device provides selectable output functions of the limit value relays to match the individual application. The limit value relays can be programmed for normally open mode (system working correctly: relays de-energised) or for normally closed mode (system working correctly: relays energised). Linking terminals 4/8 selects the NO mode while leaving them open provides the NC mode. The green LED indicates that the devices are powered.

Both limit value relays S1 and S2 are monitored by a separate dual colour LED.
An illuminated yellow LED indicates that the respective relay is energised.
The two NAMUR inputs are monitored for wire-break and short-circuit. If the NC mode has been selected and a fault in the input circuit occurs, both limit value relays de-energise; in the NO mode both relays energise for approx. 20 ms. Insufficient supply voltage during operation is also indicated by a short activation of the relays for 20 ms.

A fault in the input circuit (I) is indicated by the illuminated red LED of limit value relay S1; a fault in the input circuit (II) by the red LED of relay S2.

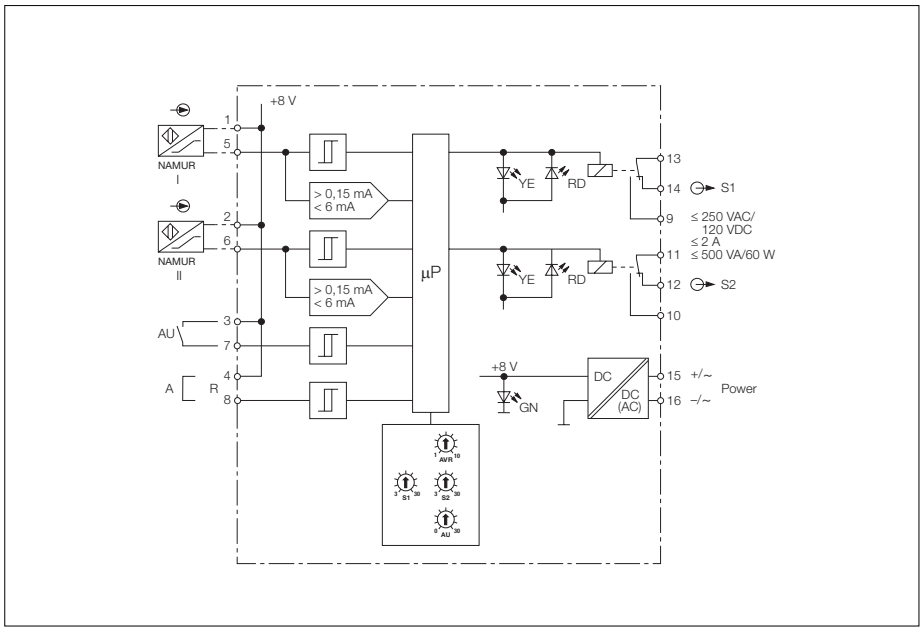

Slip Monitor MK26-22-R

A green LED indicates that the device is powered.

A floating average can be formed to steady the input signals of both inputs. This is especially important if more than one target per revolution is to be monitored. Via the rotary switch AVR up to ten cycles can be adjusted to form the average.

For the start-up phase of the drive a start-up time delay between 0.3...30 s can be selected in ten steps using the according rotary switch. In the NC mode the output relays are energised during the selected start-up delay time to prevent system shut-down due to an underspeed indication.

The start-up time delay can be activated by a potential-free NO contact or by applying supply voltage (terminals 3 and 7 linked).

In the NO mode, the relays remain de-energised during system start-up.

During normal operation, the frequency of the pulse sequences of the sensors must be identical. If shafts with different rotational speeds are monitored, it is required to use an appropriate number of targets to generate an identical frequency.

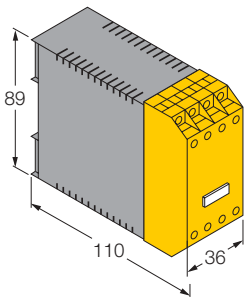

Slip monitoring	
Monitoring range	0.06...150 000 min^{-1}
– Input frequency	≤ 300 000 min^{-1} (5 kHz)
Pause duration	≥ 0.1 ms
Pulse duration	≥ 0.1 ms
Start-up time delay	0.1…30 s (adjustable)
Input circuits	
NAMUR input	according to EN 60947-5-6, terminals 5/6
– Operating characteristics	U_0 = 8.2 V; I_k = 8.2 mA
– Switching threshold	1.55 mA
– Switching hysteresis	0.2 mA
– Wire-break trip point	≤ 0.1 mA
– Short-circuit trip point	≥ 6 mA
Galvanic isolation	between input circuit, output circuit and supply voltage for 250 V_{rms}, test voltage 2.5 kV_{rms}
Output circuits	2 relay outputs
Relay output	2 SPDT contacts
– Switching voltage	≤ 250 V
– Switching current	≤ 2 A
– Switching capacity	≤ 500 VA/60 W
– Contact material	silver-alloy + 3 µm Au
LED indications	
– Power	green
– Status indication/fault indication	yellow/red (two 2-colour LEDs)
Housing	16-pole, 36 mm wide, Polycarbonate/ABS flammability class V-0 per UL 94
Mounting	panel mounting or snap-on clamps for top-hat rail (DIN 50022)
Connection	screw terminals with self-lifting pressure plates
Connection profile	≤ 2 x 2.5 mm^2 or 2 x 1.5 mm^2 with wire sleeves
Degree of protection (IEC 60529/EN 60529)	IP20
Operating temperature	-25…+60 °C

***multimodul* Slip Monitor MK26-22-R**

Type	Ident-no.	Supply voltage U_B	Line frequency	Ripple W_{PP}	Power consumption
MK26-22-R/230VAC	7543501	184 ... 264 VAC	48…62 Hz	–	≤ 5 VA
MK26-22-R/24VDC	7543503	19.2 ... 28.8 VDC	–	≤ 10 %	≤ 5 W

Rotational Speed Monitor MS21-12Ex0-R 1-channel

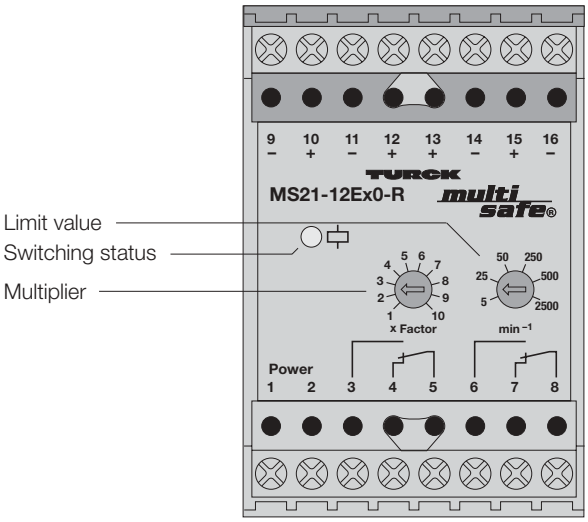

- **1-channel rotational speed monitor**
- **Overspeed or underspeed detection**
- **Intrinsically safe input circuit EEx ia**
- **Area of application according to ATEX: II (1) GD, I (M1)**
- **For use with NAMUR sensors (EN 60947-5-6)**
- **Detection range from 5…25 000 min^{-1} (six overlapping ranges)**
- **Adjustable start-up time delay**
- **Overrange of up to 60 000 min^{-1}**
- **Galvanic isolation between input circuit, output circuit and power supply**
- **Relay output with two SPDT contacts**
- **Universal supply voltage (20...250 VAC/20...125 VDC)**

The MS21-12Ex0-R is a single channel rotational speed monitor with an intrinsically safe input circuit. It has one relay output with two SPDT contacts.

The device monitors for overspeed when terminals 11 and 12 are jumpered; it monitors for underspeed when terminals 11 and 12 are open.

The device has six overlapping measuring ranges. The range selection is the product of the front panel switch and potentiometer settings.

The unit operates on the digital pulse principle. This method provides a fast response and is ideal for applications with relatively low speed. A yellow LED indicates the status of the output relay.

Start-up time delay (AU time) from 0...60 seconds may be adjusted via a potentiometer which is accesible after removing the black front cover. The time delay inhibits speed monitoring and alarm indications during system start-up.
The start-up time delay is enabled under two conditions:

- when using a potential-free N.C. contact between terminals 15 and 16.
- if terminals 15 and 16 are open when power is applied to terminals 1 and 2.

During the start-up time delay, the output relays will be energised if terminals 13/14 are open and de-energised if they are linked.

The switching hysteresis and the start-up time delay are adjusted by means of a potentiometer inside the device which is accessed by removal of the front cover.

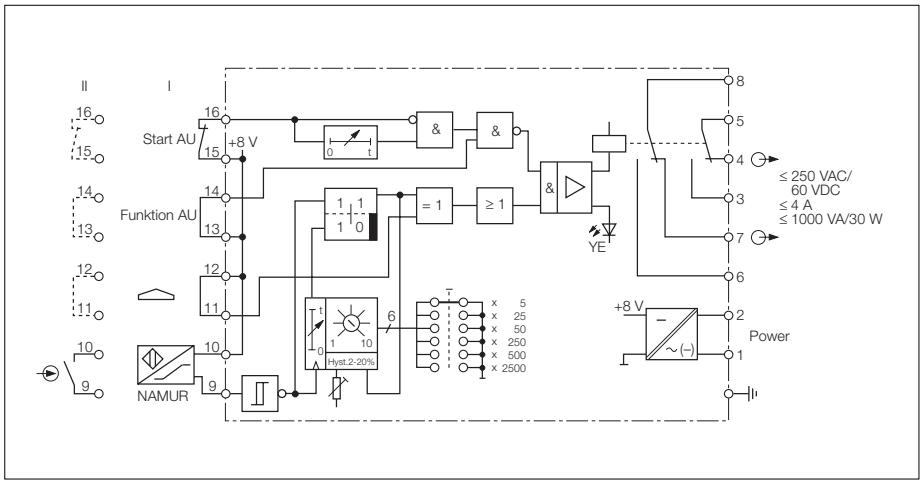

Rotational Speed Monitor MS21-12Ex0-R

Type	MS21-12Ex0-R
Ident-no.	5341106
Supply voltage U_B	20...250 VAC/20...125 VDC
Line frequency (AC)	40...70 Hz
Power consumption	≤ 3 W
Galvanic isolation	between input circuit, output circuit and supply voltage for 250 V_{rms} test voltage 2.5 kV_{rms}
Function	overspeed/underspeed
Speed range	5…25 000 pulses/min^{-1} (6 subranges)
– Range 1	5…50 pulses/min^{-1}
– Range 2	25…250 pulses/min^{-1}
– Range 3	50…500 pulses/min^{-1}
– Range 4	250…2 500 pulses/min^{-1}
– Range 5	500…5 000 pulses/min^{-1}
– Range 6	2 500…25 000 pulses/min^{-1}
Minimum pulse duration	≥ 0.5 ms
Minimum pause duration	≥ 0.5 ms
Hysteresis	2…20 % (adjustable, preset at 5 %)
Start-up time delay	0…60 s (adjustable, preset at 15 s)
Repeatability	≤ 1 % (T_a constant temperature)
Input circuits	EN 60947-5-6 (NAMUR), intrinsically safe according EN 50020
Operating characteristics	
– Voltage	8 V
– Current	8 mA
Switching threshold	1.55 mA
Output circuits	relay output
Number of contacts	2 SPDT contacts, AgCdO
Switching voltage	≤ 250 VAC/60 VDC
Switching current	≤ 4 A
Switching capacity	≤ 1000 VA/30 W
Ex-Approval acc. to certificate of conformity	DMT 01 ATEX E 119
Maximum nominal values	
– No load voltage U_0	11.0 V
– Short-circuit current I_0	55 mA
– Power P_0	150 mW
– Safety voltage U_m	250 VAC/125VDC
Max. external inductances/capacitances L_0/C_0	
– [EEx ia] IIC	1 mH/500 nF
– [EEx ia] IIB	3 mH/2500 nF
– [EEx ia] I	10 mH/10 µF
Marking of device	II (1) GD [EEx ia] IIC I (M1) [EEx ia] I
LED indications	
– Switching status	yellow
Housing	50 mm wide, Polycarbonate/ABS
Mounting	panel mounting or snap-on clamps for top-hat rail (DIN 50022)
Connection	2 x 8 self-lifting pressure plates
Connection profile	≤ 2 x 2.5 mm^2 or 2 x 1.5 mm^2 with wire sleeves
Protection type (IEC 529/DIN 40050-9)	IP 20
Operating temperature	-25…+60 °C

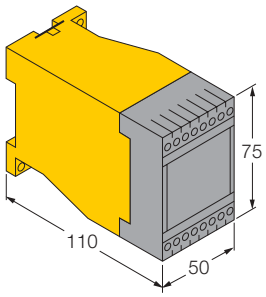

Rotational Speed Monitor MS22-Ri with Analogue Output 1-channel

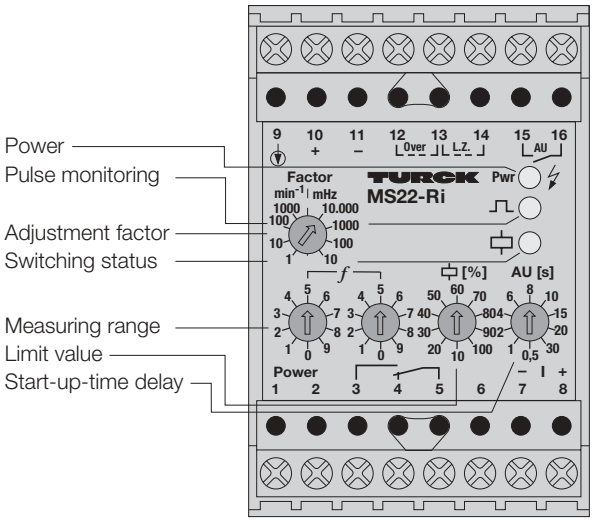

2

- **1-channel rotational speed monitor with analogue output**
- **Overspeed or underspeed detection**
- **For use with sensors conforming to EN 60947-5-6 (NAMUR) with input circuit monitoring, 3-wire pnp sensors and signal sources with pulse levels from 10...30 VDC**
- **Additional analogue output 0…20 mA or 4…20 mA**
- **Detection range from 0.01...1 660 Hz (0.6...100 000 pulses/min^{-1})**
- **Digitally adjustable setpoints in Hz or pulses/min^{-1}**
- **Excellent temperature stability and linearity**
- **Optional start-up time delay**
- **Relay output with one SPDT contact**
- **Sealed relay with hard gold-plated contacts**
- **Universal supply voltage (20...250 VAC/20...125 VDC)**

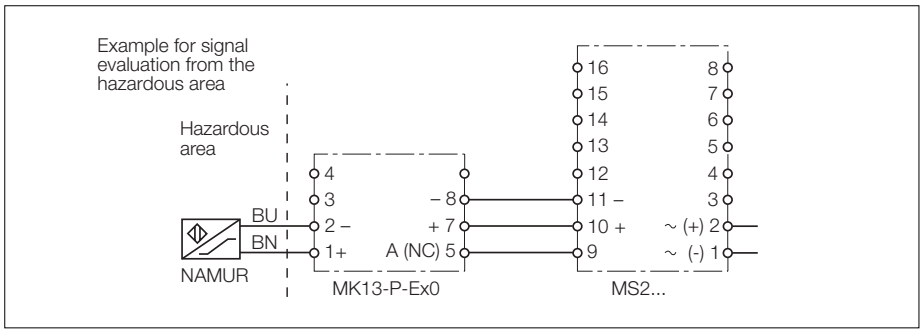

In addition to the relay output, the rotational speed monitor MS22-Ri features an analogue output of 0/4 to 20 mA.
3-wire pnp sensors, sensors according to EN 60947-5-6 or signals between 10 and 30 VDC may be connected.
If connected to NAMUR sensors, the input control circuit is monitored for both wire-break and short-circuit conditions. When a fault occurs, the dual colour LED, indicating operational readiness, changes from green to red and the output relay de-energises independently of the programmed monitoring mode.

The yellow input LED enables distinction between wire-break and short-circuit (wire-break: LED off). In case of an error, the output current will go to 0. Thus fault conditions can be detected in subsequent processing or display devices.

If 3-wire sensors are used, wire-break detection applies only to the supply line. Wire-break or short-circuit on the output line of the sensor are not detected.
If external sources are connected, terminals 11 and 9 should be used.
Supression of fault signals can be

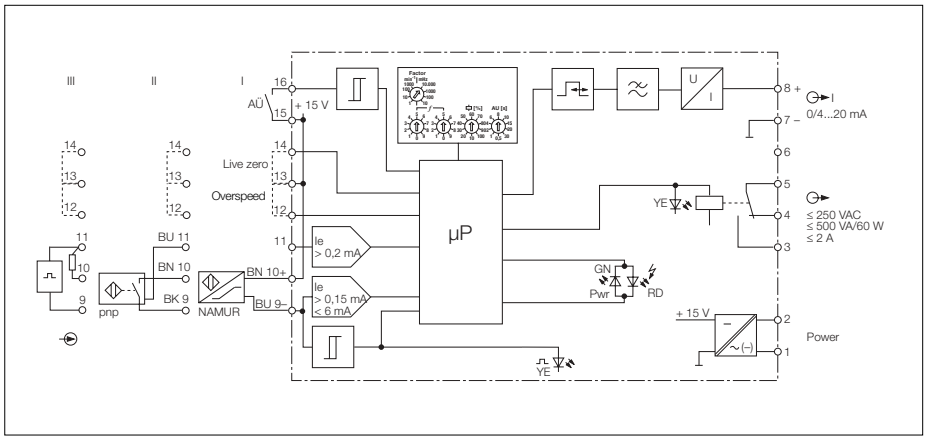

Rotational Speed Monitor MS22-Ri

accomplished with a 1...10 kΩ resistor between terminals 10 and 11.
Leaving terminals 12/13 open activates the underspeed monitoring mode: when the limit value is underranged, the relay de-energises.

Linking terminals 12/13 selects the *over-speed* monitoring mode; when the limit value is exceeded the relay de-energises.

The device operates on the digital pulse method which shortens reaction times in applications where pulses occur infrequently. A standard analogue output signal, which is proportional to the measured rotational speed, is provided additionally for control and monitoring purposes.
By linking terminals 13/14, the analogue signal can be changed from 0…20 mA to 4…20 mA.

The upper end value of the measuring range is adjusted digitally using three rotary switches on the device front and assigned to an analogue output value of 20 mA. Below 0.6 min^{-1} the output current adopts the value 0/4 mA. Within the selected measuring range, the switch point is adjustable as a percentage between 10 and 100 % of the upper end value by means of an additional rotary switch. The output relay status is indicated by a yellow LED.

In the *underspeed* monitoring mode, a fixed start-up time delay (AU-time) of 15 s is provided. The output relay is energised during the start-up time delay. Consequently underspeed indications are inhibited during system start-up.
The time delay is activated by a potential-free contact between terminals 15/16 when the device is on, or by linking terminals 15/16 and then applying power to the device.

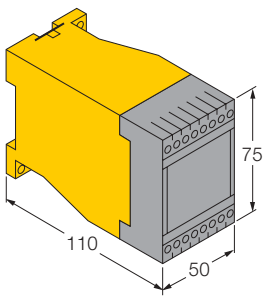

Type	MS22-Ri
Ident-no.	0508010
Supply voltage U_B	20...250 VUC
Line frequency (AC)	40...70 Hz
Power consumption	≤ 3 W
Galvanic isolation	input circuit to output circuit and supply voltage for 250 V_{rms} test voltage 2,5 kV_{rms}
Rotational speed monitoring	overspeed/underspeed
Measuring range	0.01...1660 Hz or 0.6...100 000 min^{-1}
Switch point adjustment range	10…100 %
Input frequency	≤ 150 000 min^{-1}
Pause duration	≥ 0.2 ms
Pulse duration	≥ 0.2 ms
Hysteresis	approx. 10 %
Start-up time delay	0.5…30 s (adjustable, 10 positions)
Temperature drift frequency	≤ 0.005 %/K
Temperature drift analogue output	≤ 0.005 %/K
Linearity error	≤ 0.1 % v.E.
Clearences and creepage distances	
– Input and output circuit to power supply	≥ 4 mm
– Input circuit to power supply	≥ 4 mm
Input circuits	NAMUR/3-wire, pnp
NAMUR input	according to EN 60947-5-6, terminals 9/10
– Operating characteristics	U_0 = 8.2 V; I_k = 8.2 mA
– Switching thresholds	1.4 mA ≤ I_e ≤ 1.8 mA
– Wire-break trip point	≤ 0.15 mA
– Short-circuit trip point	≥ 6 mA
3-wire input	pnp, terminals 9…11
– Operating characteristics	U ≤ 15 V; I ≤ 30 mA
– "OFF"signal	0…5 VDC
– "ON" signal	10…30 VDC
Output circuits	1 relay output and 1 analogue output
Relay output	1 SPDT contact
– Switching voltage	≤ 250 V
– Switching current	≤ 2 A
– Switching capacity	≤ 500 VA/60 W
– Contact material	silver-alloy + 3 µm Au
Analogue output	
– Current source	0/4…20 mA (load ≤ 600 Ω)
LED indications	
– Power/Fault indication	green/red (2-colour LED)
– Switching status	yellow
– Pulse monitoring	yellow
Housing	50 mm wide, Polycarbonate/ABS
Mounting	panel mounting or snap-on clamps for top-hat rail (DIN 50022)
Connection	2 x 8 self-lifting pressure plates
Connection profile	≤ 2 x 2.5 mm^2 or 2 x 1.5 mm^2 with wire sleeves
Degree of protection (IEC 60529/EN 60529)	IP20
Operating temperature	-25…+60 °C

Direction Discriminator MS23-R 1-channel

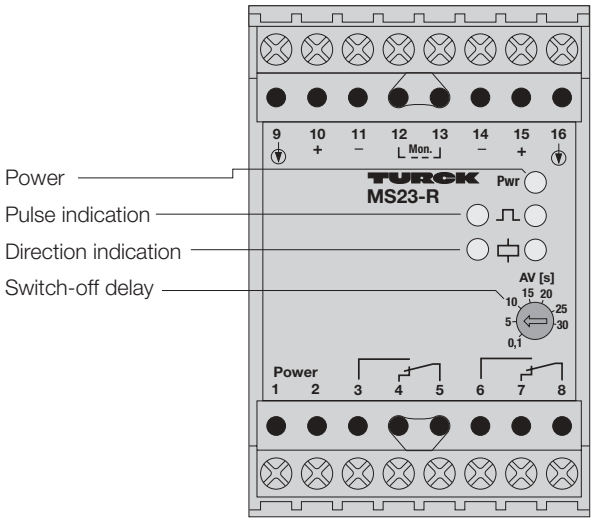

2

- **1-channel direction discriminator**
- **Underspeed monitoring**
- **For use with sensors conforming to EN 60947-5-6 (NAMUR), 3-wire pnp sensors and signal sources with pulse levels from 10...30 VDC**
- **Adjustable switch-off delay**
- **2 relay outputs, each with one SPDT contact**
- **2 sealed relays with hard gold plated contacts**
- **Universal supply voltage (20...250 VUC)**

The direction of rotation is obtained by evaluating the attenuation sequence and the overlap from the two sensor signals. The target used must be suitable for simultaneous damping of both sensors for a period of at least 1 ms.

One output relay with SPDT contacts will energise in the forward direction; the other relay will energise in the reverse direction. Each output has a yellow LED for status indications.

Leaving terminals 12/13 (Mem.) open activates the switch-off delay. The adjustable switch off delay function enables monitoring of the time interval between the pulse indication and detection of an under-speed condition.

A potentiometer (AV) located on the front cover of the housing serves to adjust the switch-off time delay (0.1...30 s).
The output relay energised last will stay permanently energised during the adjusted time delay. If the pulse indication cease, the relays will de-energise after the time delay. The adjustable switch off delay also allows to blank out short periods of suddenly missing Pulse indication.

If terminals 12/13 are linked (Mem.), the switch-off delay is disabled. In this mode, the relays retain their switching status until the direction of rotation changes.

This device should *not* be used in safety applications where accurate zero speed detection is required.

The MS23-R direction discriminators accommodates NAMUR sensors according to EN 60947-5-6, 3-wire pnp sensors or other voltage sources with pulse levels between 10 and 30 VDC. The device is used to determine forward or reverse rotation of a system.

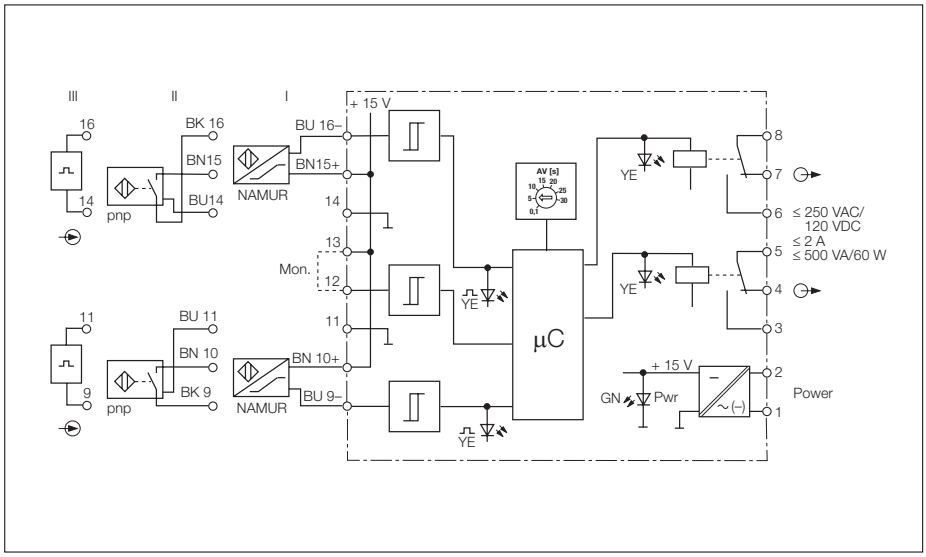

Direction Discriminator MS23-R

Type	MS23-R
Ident-no.	0508112
Supply voltage U_B	20...250 VUC
Line frequency (AC)	40...70 Hz
Power consumption	≤ 3 W
Galvanic isolation	between input circuit, output circuit and supply voltage for 250 V_{rms} test voltage 2.5 kV_{rms}
Clearences and creepage distances	
– Input circuit to output circuit	≥ 4 mm
– Input circuit to power supply	≥ 4 mm
Rotational speed monitoring	forward and reverse directions, underspeed
Input frequency	≤ 150 000 min^{-1}
Pause duration	≥ 0.2 ms
Pulse duration	≥ 0.2 ms
Hysteresis	approx. 10 %
Switch off delay	0.1…30 s (adjustable)
Repeat accuracy	± 0.5 %
Temperature drift	≤ 0.020 %/K
Input circuits	NAMUR/3-wire, pnp
NAMUR input	according to EN 60947-5-6, terminals 9/10; 15/16
– Operating characteristics	
Voltage	8.2 V
Current	8.2 mA
– Switching threshold	1.4 mA ≤ I_e ≤ 1.8 mA
3-wire input	pnp, terminals 9…11;14...16
– Operating characteristics	
Voltage	15 VDC
Current	≤ 15 mA
– "ON" signal	0…5 VDC
– "OFF" signal	10...30 VDC
Output circuits	2 relay outputs
Relay output	
– Number of contacts	1 SPDT contact, silver-alloy + 3 µm Au
– Switching voltage	≤ 250 V
– Switching current	≤ 2 A
– Switching capacity	≤ 500 VA/60 W
LED indications	
– Power	green
– Direction indication (forward or reverse motion)	yellow
– Pulse indication	yellow
Housing	50 mm wide, Polycarbonate/ABS
Mounting	panel mounting or snap-on clamps for top-hat rail (DIN 50022)
Connection	2 x 8 self-lifting pressure plates
Connection profile	≤ 2 x 2.5 mm^2 or 2 x 1.5 mm^2 with wire sleeves
Degree of protection (IEC 60529/EN 60529)	IP20
Operating temperature	-25…+60 °C

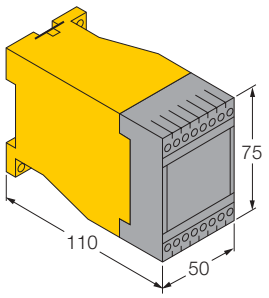

Direction Discriminator MS23-22Ex0-R 1-channel

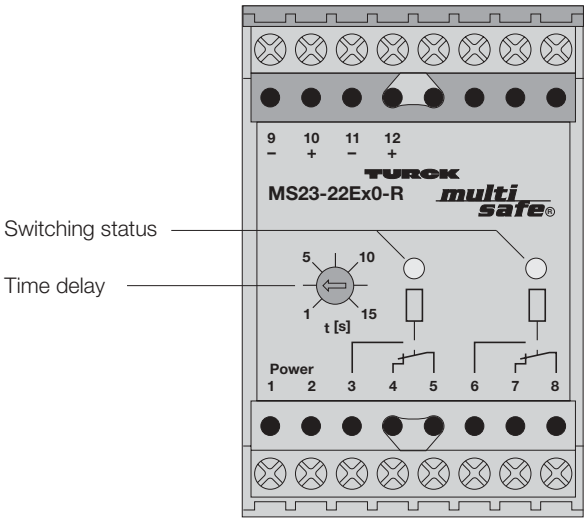

- **1-channel direction discriminator**
- **Intrinsically-safe input circuit EEx ia**
- **Area of application according to ATEX: II (1) GD, I (M1)**
- **For use with sensors conforming to EN 60947-5-6 (NAMUR)**
- **Galvanic isolation between input circuit, output circuit and supply voltage**
- **Direction detection in either direction**
- **Input circuit monitoring for wire-break and short-circuit**
- **2 relay outputs, each with one SPDT contact**
- **Universal supply voltage (20...250 VAC/20...125 VDC)**

The MS23-22Ex0-R direction discriminator features an intrinsically safe input circuit. It provides two relay outputs, each with one SPDT contact.

The MS23-22Ex0-R uses two sensors to determine forward or reverse direction of a system. One output relay will energize in the forward direction; the other relay will energize in the reverse direction. Each output has a yellow LED that turns on when the output is energised. At zero speed both relays are de-energised.

The direction discriminator receives input pulses from sensors according to EN 60947-5-6 (NAMUR). Both input circuits are monitored for wire-break and short-circuit. In case of a fault condition, both output relays de-energize automatically.

The direction of rotation is obtained by evaluating the sequence and the overlap from the two sensor signals. The target used must be suitable for simultaneous damping of both sensors for a period of at least 1 ms.

A potentiometer located on the front cover of the housing serves to adjust the time delay (1...15 s) between consecutive inputs pulse sequences.

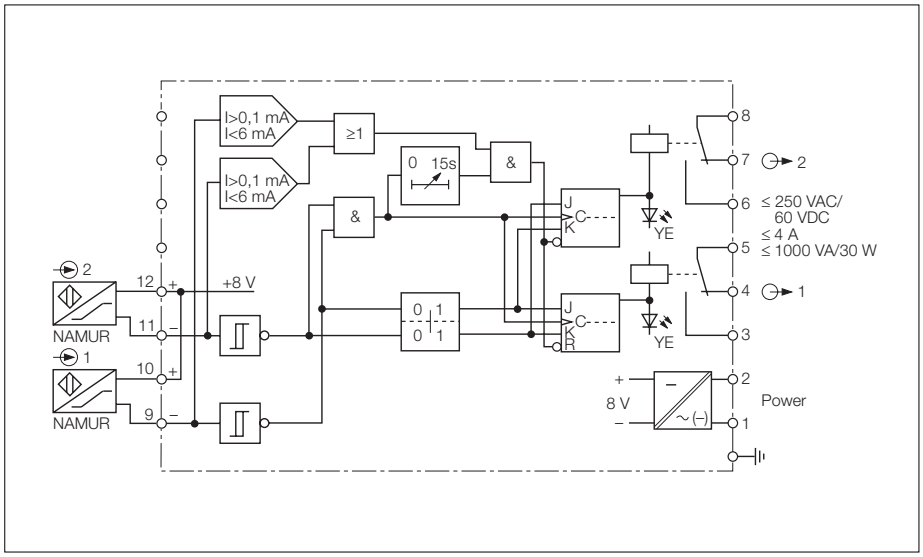

Direction Discriminator MS23-22Ex0-R

Type	MS23-22Ex0-R
Ident-no.	5341107
Supply voltage U_B	20...250 VAC/20...125 VDC
Line frequency (AC)	40...70 Hz
Power consumption	≤ 3 W
Galvanic isolation	between input circuit, output circuit and supply voltage for 250 V_{rms} test voltage 2.5 kV_{rms}
Direction discrimination	both directions
Input pulse overlap	≥ 1 ms
Time limit for input pulse sequence	1...15 s (adjustable)
Input circuits	accor. to EN 60947-5-6 (NAMUR), intrinsically safe per EN 50020
Operating charcteristics	
– Voltage	8 V
– Current	8 mA
Switching threshold	1,55 mA
Hysteresis	0,2 mA
Output circuits	2 relais outputs
Number of contacts	1 SPDT contact, AgCdO
Switching voltage	≤ 250 VAC/60 VDC
Switching current	≤ 4 A
Switching caoacity	≤ 1000 VA/30 W
Ex-Approval acc. to certificate of conformity	DMT 01 ATEX E 119
Maximum nominal values	
– No load voltage U_0	11.0 V
– Short-circuit current I_0	55 mA
– Power P_0	150 mW
– Safety voltage U_m	250 VAC/125VDC
Max. external inductances/capacitances L_0/C_0	
– [EEx ia] IIC	1 mH/500 nF
– [EEx ia] IIB	3 mH/2500 nF
– [EEx ia] I	10 mH/10 µF
Marking of device	II (1) GD [EEx ia] IIC I (M1) [EEx ia] I
LED indications	
– Switching status	yellow
Housing	50 mm wide, Polycarbonate/ABS
Mounting	panel mounting or snap-on clamps for top-hat rail (DIN 50022)
Connection	2 x 8 self-lifting pressure plates
Connection profile	≤ 2 x 2.5 mm^2 or 2 x 1.5 mm^2 with wire sleeves
Protection type (IEC 60529/EN 60529)	IP20
Operating temperature	-25…+60 °C

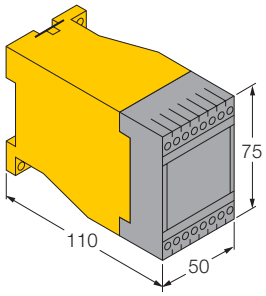

Rotational Speed Monitor MS24-R 1-channel

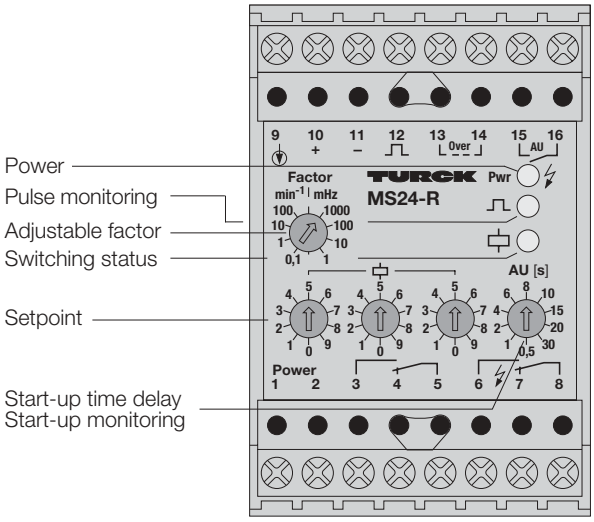

- **1-channel rotational speed monitor**
- **Overspeed or underspeed detection**
- **For use with sensors conforming to EN 60947-5-6 (NAMUR) with input circuit monitoring, 3-wire pnp sensors and signal sources with pulse levels from 10...30 VDC**
- **Detection range from 0.01...1 660 Hz or 0.6...100 000 min-1**
- **Digital adjustment of setpoints in Hz or min-1**
- **Excellent temperature stability and linearity**
- **Adjustable start-up time delay in the underspeed monitoring mode**
- **Optional dynamic input alarm in the overspeed monitoring mode**
- **1 setpoint relay, 1 alarm relay**
- **Sealed relays with hard gold plated contacts**
- **Universal supply voltage (20...250 VUC)**

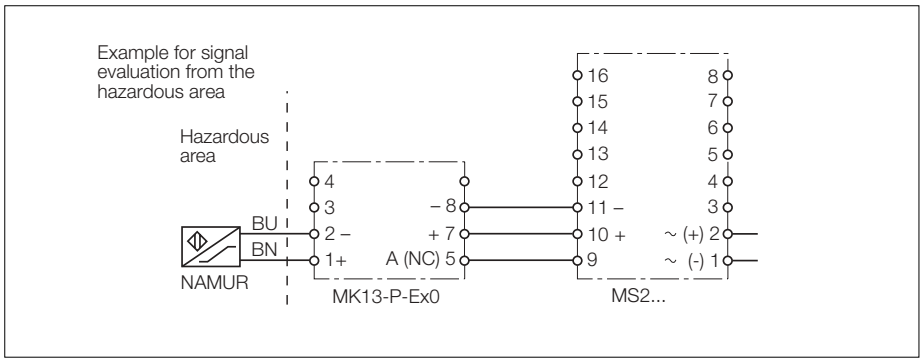

The MS24-R are rotational underspeed/ overspeed monitors designed to monitor pulse sequences for *overspeed* and *underspeed*. Limit value adjustments are determined via four rotary switches on the front of the device. To provide optimum response times for applications with relatively low speeds the device operates on the digital pulse principle.

The device accommodates NAMUR sensors according to EN 60947-5-6, 3-wire pnp sensors or other voltage sources with pulse levels between 10 and 30 VDC. If connected to NAMUR (I) sensors, the input circuit is monitored for wire-break and short-circuit conditions. During a malfunction the dual colour „Power“ LED changes from green to red and the output relay (3...5) as well as the limit value relay (6...8) de-energise independently of the selected monitoring mode.

The yellow LED for the Pulse indication enables distinction between a wire-break and a short-circuit condition (wire-break: LED turns off).

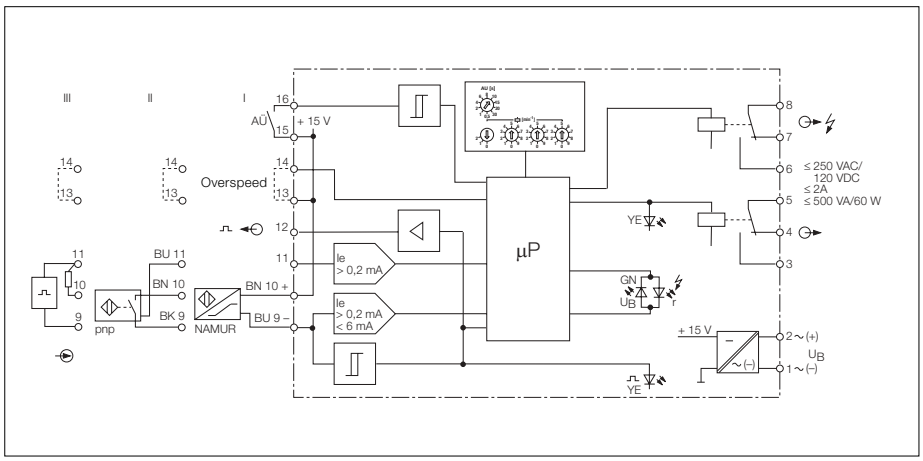

Rotational Speed Monitor MS24-R

With 3-wire sensors as input devices, the power supply lines are monitored for wire-break only. Wire-break or short-circuit conditions on the output of the sensor are not detected.

Terminals 11 and 9 are the inputs for external signal sources (III). A 1...10 kΩ resistor must be connected between terminals 10 and 11 to disable wire-break monitoring.

Underspeed detection is selected when terminals 13/14 are linked. If the speed is below the limit value, the limit value relay de-energises. The device is programmed for overspeed when terminals 13 and 14 are left open. If the speed exceeds the limit value, the limit value relay de-energises. A yellow LED indicates the status of the output relay.

For *underspeed* monitoring, a built-in start-up time delay (AU) is available. During the start-up time delay, the output relay will be energised to prevent that the system is brought to a stop when the input rate is less than the preset limit value. The start-up time delay is triggered under two conditions: upon connection of a potential-free contact between terminals 15 and 16 while the device is powered; or by linking terminals 15 and 16 first and then applying power to the device.

For *overspeed* monitoring, a dynamic input alarm is available that reacts immediately when pulse indication are missing. A variable time delay is set that activates with every incoming pulse. If no pulses are received during the preset time, the limit value and alarm relays de-energise. There are two ways of activating the dynamic input monitoring feature: upon connection of a potential-free contact between terminals 15 and 16 while the device is powered; or by linking terminals 15 and 16 first and then applying power to the device.

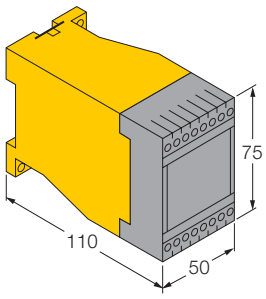

Type	MS24-R
Ident-no.	0519009
Supply voltage U_B	20...250 VUC
Line frequency (AC)	40...70 Hz
Current consumption	≤ 3 W
Galvanic isolation	between input circuit, output circuit and supply voltage for 250 V_{rms}, test voltage 2.5 kV_{rms}
Rotational speed monitoring	overspeed/underspeed
Speed range	0.01...1660 Hz or 0.6...100 000 min^{-1}
Input frequency	≤ 150 000 min^{-1}
Pause duration	≥ 0.2 ms
Pulse duration	≥ 0.2 ms
Hysteresis	approx. 10 %
Start-up time delay/dyn. input alarm	0.5…30 s (in 10 increments)
Temperature drift	≤ 0.005 %/K
Repeat accuracy	≤ 0.1 %
Clearences and creepage distances	
– Input circuit to output circuit	≥ 4 mm
– Input circuit to power supply	≥ 4 mm
Input circuits	NAMUR/3-wire, pnp
NAMUR input	according to EN 60947-5-6, terminals 9/10
– Operating characteristics	U_0 = 8.2 V; I_k = 8.2 mA
– Switching thresholds	1.4 mA ≤ I_e ≤ 1.8 mA
– Wire-break trip point	≤ 0.15 mA
– Short-circuit trip point	≥ 6 mA
3-wire input	pnp, terminals 9…11
– Operating characteristics	U ≤ 15 V; I ≤ 30 mA
– "ON" signal	0…5 VDC
– "OFF" signal	10…30 VDC
Output circuits	2 relay outputs and pulse output
Relay outputs	each with 1 SPDT contact
– Switching voltage	≤ 250 V
– Switching current	≤ 2 A
– Switching capacity	≤ 500 VA/60 W
– Contact material	silver-alloy + 3 µm Au
Pulse output (terminal 12)	14 V/10 mA, short-circuit protected
LED indications	
– Power/Fault indication	green/red (2-colour LED)
– Status indication	yellow
– Pulse indication	yellow
Housing	50 mm wide, Polycarbonate/ABS
Mounting	panel mounting or snap-on clamps for top-hat rail (DIN 50022)
Connection	2 x 8 self-lifting pressure plates
Connection profile	≤ 2 x 2.5 mm^2 or 2 x 1.5 mm^2 with wire sleeves
Degree of protection (IEC 60529/EN 60529)	IP20
Operating temperature	-25…+60 °C

Rotational Speed Monitor MS24-112-R 1-channel

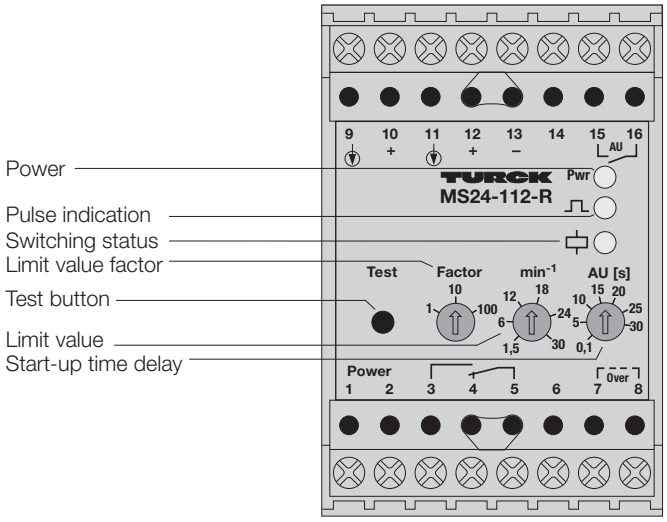

- **1-channel rotational speed monitor**
- **Overspeed or underspeed detection**
- **For use with sensors conforming to EN 60947-5-6 (NAMUR), 3-wire pnp sensors and signal sources with pulse levels from 10...30 VDC**
- **Relay output with one SPDT contact**
- **Monitoring ranges from 1.5...3000 min-1 (3 ranges)**
- **Optional start-up time delay**
- **Sealed relay with hard gold plated contacts**
- **Universal supply voltage (20...250 VUC)**

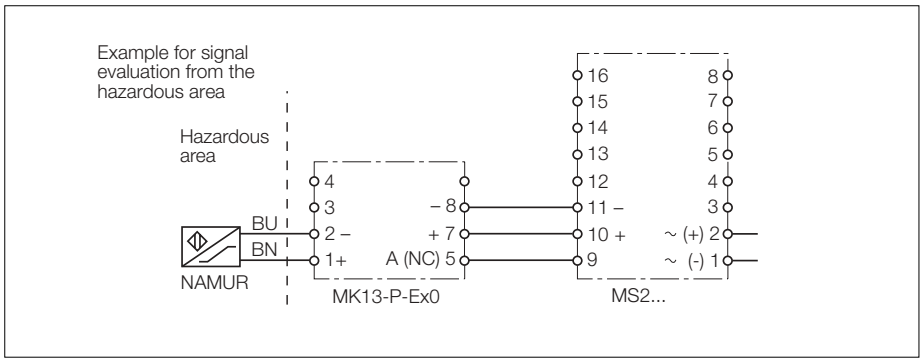

The device features three overlapping measuring ranges and can be easily adapted to the application. A 3-position switch serves to adjust the required measuring range. Then the switch point is adjusted by means of the front panel potentiometer.

The test button enables adjustment of the switch point during installation without disabling the output relay. When the test button is pressed, the output relay remains energised.

The unit operates on the digital pulse principle. This method provides a fast response and is ideal for applications with relatively low speed.

For *underspeed* monitoring, a built-in start-up time delay (AU) is available. During the start-up time delay, the output relay will be

The rotational speed monitor MS24-112-R may be connected to 3-wire pnp sensors, sensors according to EN 60947-5-6 (NAMUR) or voltage sources with a signal level between 10 and 30 VDC.

Linking terminals 7/8 selects the *overspeed* monitoring mode. If the preset limit value is exceeded, the relay is de-energised. Leaving terminals 7/8 open activates the *underspeed* monitoring mode. If the speed is below the preset limit value, the relay is de-energised.

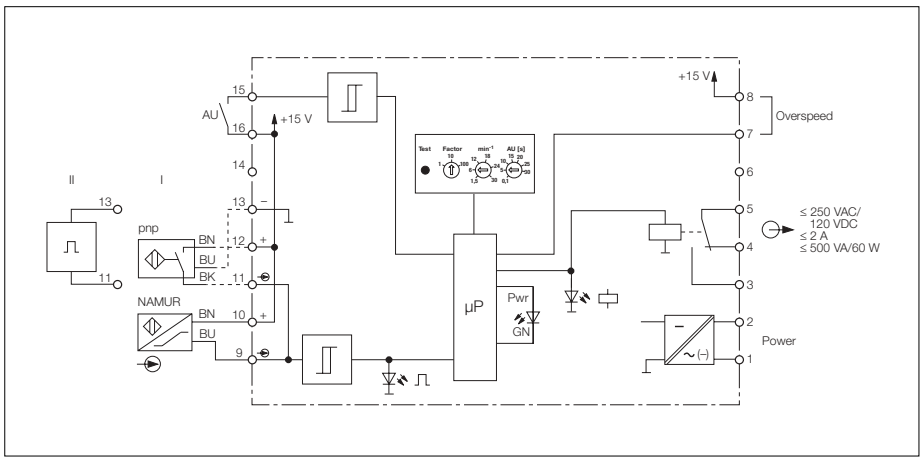

Rotational Speed Monitor MS24-112-R

energised to prevent that the system is brought to a stop when the input rate is less than the preset limit value. The start-up time delay is triggered under two conditions: upon connection of a potential-free contact between terminals 15 and 16 while the device is powered; or by linking terminals 15 and 16 first and then applying power to the device.

The switching state of the output relay is indicated by the yellow LED; the device operation is indicated by a green LED. If an input pulse is present, the respective yellow LED lights.

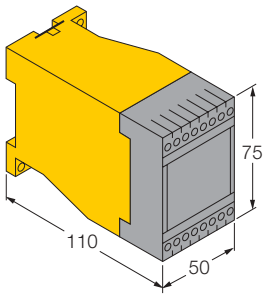

Type	MS24-112-R
Ident-no.	0518003
Supply voltage U_B	20...250 VUC
Line frequency (AC)	40...70 Hz
Power consumption	≤ 3 W
Galvanic isolation	between input circuit, output circuit and supply voltage for 250 V_{rms}, test voltage 2.5 kV_{rms}
Rotational speed monitoring	overspeed/underspeed
Speed range	1.5...3000 min^{-1} (3 ranges)
– Range 1	1.5...30 min^{-1}
– Range 2	15...300 min^{-1}
– Range 3	150...3000 min^{-1}
Input frequency	≤ 60 000 min^{-1}
Pause duration	≥ 0.2 ms
Pulse duration	≥ 0.2 ms
Hysteresis	approx. 10 %
Start-up time delay	0.1…30 s (front panel potentiometer)
Repeat accuracy	≤ 0.1 %
Temperature drift	≤ 0.005 %/K
Clearences and creepage distances	
– Input circuit to output circuit	≥ 4 mm
– Input circuit to power supply	≥ 4 mm
Input circuits	NAMUR or (3-wire, pnp)
NAMUR input	according to EN 60947-5-6, terminals 9/10
– Operating characteristics	U_0 = 8.2 V; I_k = 8.2 mA
– Switching threshold	1.4 mA ≤ I_e ≤ 1.8 mA
3-wire input	pnp, terminals 11…13
– Operating characteristics	U ≤ 15 VDC; I ≤ 30 mA
– "ON" signal	0…5 VDC
– "OFF" signal	10...30 VDC
Output circuits	
Relay output	1 relay output
– Number of contacts	1 SPDT contact, silver-alloy + 3 µm Au
– Switching voltage	≤ 250 V
– Switching current	≤ 2 A
– Switching capacity	≤ 500 VA/60 W
LED indications	
– Power	green
– Switching status	yellow
– Pulse indication	yellow
Housing	50 mm wide, Polycarbonate/ABS
Mounting	panel mounting or snap-on clamps for top-hat rail (DIN 50022)
Connection	2 x 8 self-lifting pressure plates
Connection profile	≤ 2 x 2.5 mm^2 or 2 x 1.5 mm^2 with wire sleeves
Degree of protection (IEC 60529/EN 60529)	IP20
Operating temperature	-25…+60 °C

Rotational Speed Meter MS25-Ui 1-channel

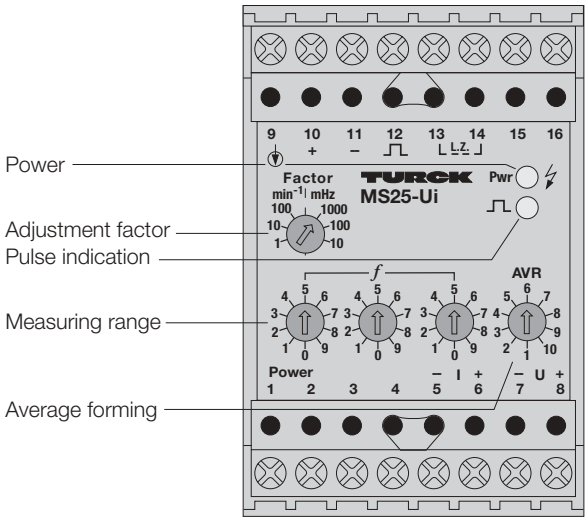

- **1-channel rotational speed meter with voltage and current output**
- **For use with sensors conforming to EN 60947-5-6 (NAMUR) with input circuit monitoring, 3-wire pnp sensors and signal sources with pulse levels from 10...30 VDC**
- **Digitally adjustable detection range from 0.01...1 660 Hz or 0.6...100 000 min^{-1}**
- **Stepwise adjustment of the measuring range to the application**
- **Excellent temperature stability and linearity**
- **Adjustable floating average to steady the signal**
- **Pulse output**
- **Universal supply voltage (20...250 VUC)**

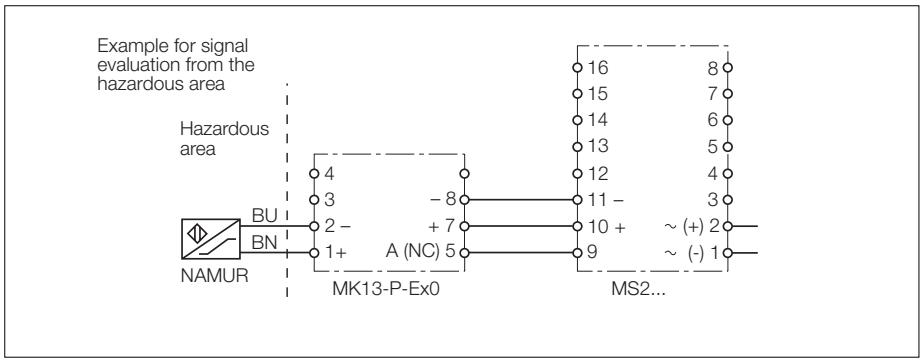

To adjust the speed range an end value between 0.6...100 000 min^{-1} or 0.01...1660 Hz is set using four multi-position switches. An output signal of 10 V or 20 mA accords to the end value.

If the speed rate is below 0.6 min^{-1}/0.01Hz an output signal of 0/4 mA or 0 V will be generated.

The voltage output supplies 0...10 V and the current output supplies 0/4...20 mA.

The current output may be programmed for 4...20 mA operation by linking terminals 13 and 14.
If connected to NAMUR sensors, the input circuit is monitored for wire-break and short-circuit conditions. If a fault condition occurs, the dual colour LED turns from green to red and the output current drops to 0 mA (also in live-zero operation) or 0 V, respectively. The two conditions can be distinguished by the yellow LED; wire-break causes it to turn off.

The MS25-Ui is a digital-to-analogue converter that converts an input frequency into an analogue current or voltage relative to the adjusted measuring range. The device can accommodate NAMUR sensors, 3-wire pnp sensors or other voltage sources with pulse levels between 9 and 30 VDC.

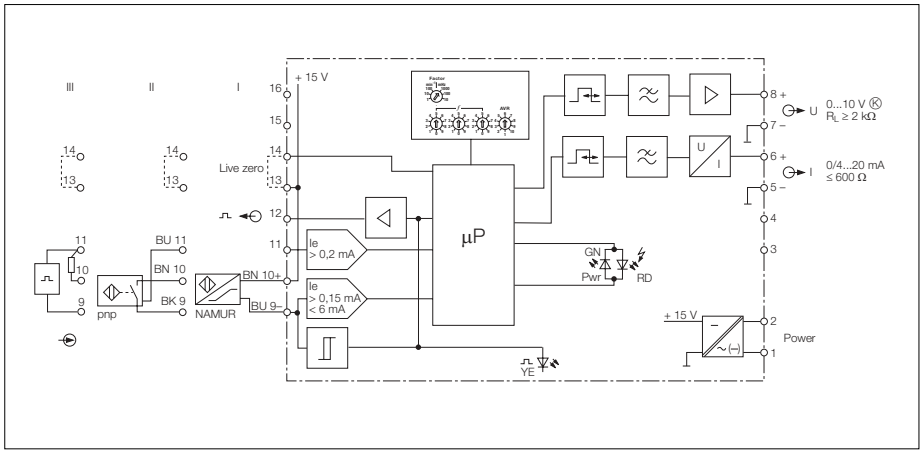

Rotational Speed Meter MS25-Ui

When 3-wire pnp sensors are used, the power supply lines are monitored for wire-break only.

Wire-break and short-circuit conditions on the output side of the sensor are not detected.

When external signal sources are connected, terminals 11 and 9 must be used. In order to suppress error indications, a 1...10 kΩ resistor must be connected between terminals 10 and 11.

To steady the input signal, an attenuation factor can be set between 1 and 10. When the factor is set to 1 (1 pulse sequence), there is no signal attenuation. The attenuation principle is based upon the floating average formed over the adjusted number of measurements.

Speed monitors used in connection with sensors from the hazardous area require a remote amplifier for operation.

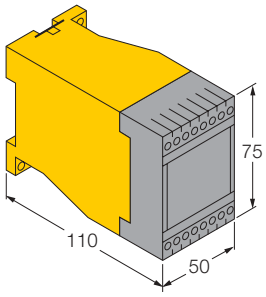

Type	MS25-Ui
Ident-no.	0508220
Supply voltage U_B	20...250 VUC
Line frequency (AC)	40...70 Hz
Power consumption	≤ 3 W
Galvanic isolation	between input circuit, output circuit and supply voltage for 250 V_{rms} test voltage 2.5 kV_{rms}
Function	
Measuring range	0.01...1660 Hz or 0.6...100 000 min^{-1} (digitally adjustable)
Input frequency	≤ 150 000 min^{-1}
Pause duration	≥ 0.2 ms
Pulse duration	≥ 0.2 ms
Temperature drift	≤ 0.005 %/K v.E. (50 ppm)
Linearity error	≤ 0.1 % v.E.
Clearences and creepage distances	
– Input und output circuit to power supply	≥ 4 mm
– Input circuit to power supply	≥ 4 mm
Input circuits	NAMUR/3-wire, pnp
NAMUR input	according to EN 60947-5-6, terminals 9/10
– Operating characteristics	U_0 = 8.2 V; I_k = 8.2 mA
– Switching thresholds	1.4 mA ≤ I_e ≤ 1.8 mA
– Wire-break trip point	≤ 0.15 mA
– Short-circuit trip point	≥ 6 mA
3-wire input	pnp, terminals 9…11
– Operating characteristics	U ≤ 15 V; I ≤ 30 mA
– "ON" signal	0…5 VDC
– "OFF" signal	10…30 VDC
Output circuits	current, voltage and pulse output
Current output	0/4…20 mA (load ≤ 600 Ω)
Voltage output	0…10 V (R_L ≥ 2 kΩ), short-circuit protected
– Linearity error	≤ 0.1 % of final value
Pulse output (terminal 12)	14 V/10 mA, short-circuit protected
Temperature drift	typ. ≤ 0.005 %/°C of final value max. 0.01 %/°C of final value
LED indications	
– Power/Fault indication	green/red (2-colour LED)
– Pulse indication	yellow
Housing	50 mm wide, Polycarbonate/ABS
Mounting	panel mounting or snap-on clamps for top-hat rail (DIN 50022)
Connection	2 x 8 self-lifting pressure plates
Connection profile	≤ 2 x 2.5 mm^2 or 2 x 1.5 mm^2 with wire sleeves
Degree of protection (IEC 60529/EN 60529)	IP20
Operating temperature	-25…+60 °C

Rotational Speed Monitor MS27-R 1-channel

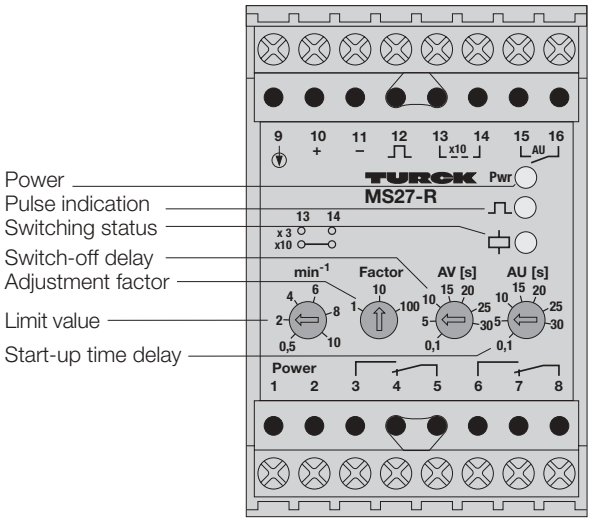

2

- **1-channel rotational speed monitor**
- **Underspeed detection**
- **For use with sensors conforming to EN 60947-5-6 (NAMUR), 3-wire pnp sensors and signal sources with pulse levels from 10...30 VDC**
- **Detection range from 1.5…10000 min^{-1} (six subranges)**
- **Adjustable start-up time delay**
- **Adjustable off-delay**
- **2 relay outputs, each with one SPDT contact**
- **2 sealed relays with hard gold plated contacts**
- **Pulse output**
- **Universal supply voltage (20...250 VUC)**

The MS27-R rotational speed monitors accommodate NAMUR sensors according to EN 60947-5-6 (II), 3-wire pnp sensors (I) or signal sources with pulse levels from 10...30 VDC (III). These devices feature two relay outputs, each with one SPDT contact.

This rotational speed monitor is firmly programmed for *underspeed* detection and provides six adjustable, overlapping speed ranges. Adjustment of the speed range is determined by a subrange setting and a range factor. The subrange setting is programmed using terminals 13/14. The range factor is set with the „Factor“ switch located in the front. Fine adjustment of the switch point is done with the potentiometer „min^{-1}“.

The unit operates on the digital pulse principle. This method provides a fast response and is ideal for applications with relatively low speed.

Operational readiness is signalled by a green LED.

An input pulse is indicated by a yellow LED. A yellow LED indicates the status of the output relay.

A start-up time delay can be set from 0.1...30 s using the front potentiometer (AU). During the start-up time delay, the output relay will be energised to prevent that the system is brought to a stop when the input rate is less than the preset limit value. The start-up time delay is triggered under two conditions: by connecting a potential-free contact between terminals 15 and 16 while the device is powered, or by applying power to the device after the terminals have been linked.

In addition, an off-delay timer is provided for filtering out short duration speed dips. The off-delay is variable from 0.1...30 s and is set with the AV potentiometer.

This device is *not* suitable for safety applications where accurate zero speed detection is required.

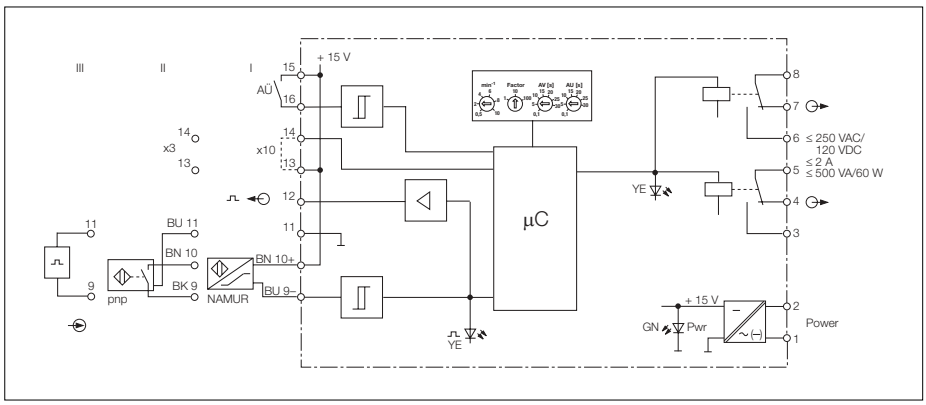

Rotational Speed Monitor MS27-R

Type	MS27-R
Ident-no.	0508412
Supply voltage U_B	20...250 VAC/DC
Line frequency (AC)	40...70 Hz
Power consumption	≤ 3 W
Galvanic isolation	input circuit to output circuit and supply voltage for 250 V_{rms}, test voltage 2,5 kV_{rms}
Clearences and creepage distances	
– Input circuit to output circuit	≥ 4 mm
– Input circuit to power supply	≥ 4 mm
Rotational speed monitoring	underspeed
Mounting range	1.5…10 000 min^{-1} (six subranges)
Input frequency	≤ 150 000 min^{-1}
Pause duration	≥ 0.2 ms
Pulse duration	≥ 0.2 ms
Hysteresis	approx. 10 %
Start-up time delay	0.1…30 s (adjustable)
Switch off delay	0.1…30 s (adjustable)
Repeat accuracy	± 0.5 %
Temperature drift	≤ 0.020 %/K
Input circuits	NAMUR/3-wire, pnp
NAMUR input	according to EN 60947-5-6, terminals 9/10
– Operating characteristics	
Voltage	8.2 V
Current	8.2 mA
– Switching threshold	1.4 mA ≤ I_e ≤ 1.8 mA
3-wire input	pnp, terminals 9…11
– Operating characteristics	
Voltage	15 VDC
Current	≤ 30 mA
– "ON" signal	0…5 VDC
– "OFF" signal	10...30 VDC
Output circuits	
Relay outputs	2 relay outputs/pulse output
– Number of contacts	each with 1 SPDT contact, silver alloy + 3 µm Au
– Switching voltage	≤ 250 V
– Switching current	≤ 2 A
– Switching capacity	≤ 500 VA/60 W
Pulse output (terminal 12)	14 VDC/10 mA, short-circuit protected
LED indications	
– Power	green
– Switching status	yellow
– Pulse indication	yellow
Housing	50 mm wide, Polycarbonate/ABS
Mounting	panel mounting or snap-on clamps for top-hat rail (DIN 50022)
Connection	2 x 8 self-lifting pressure plates
Connection profile	≤ 2 x 2.5 mm^2 or 2 x 1.5 mm^2 with wire sleeves
Degree of protection (IEC 60529/EN 60529)	IP20
Operating temperature	-25…+60 °C

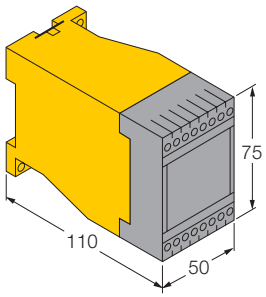

Window Discriminator
MS28-R
1-channel

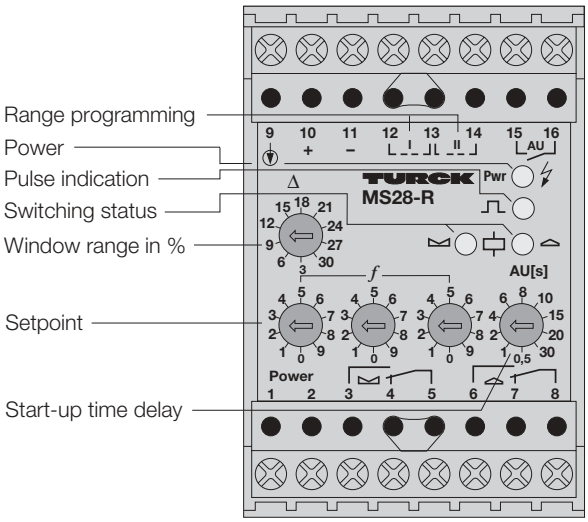

- **1-channel window discriminator**
- **Overspeed and underspeed monitoring**
- **For use with sensors conforming to EN 60947-5-6 (NAMUR) with input circuit monitoring, 3-wire pnp sensors and signal sources with pulse levels from 10...30 VDC**
- **Digital adjustment of setpoints within the range from: 0.01...100 Hz or 1...10 000 min^{-1}**
- **Adjustable window range: ± 3...30 % of setpoint**
- **Excellent temperature stability and repeatability**
- **Adjustable start-up time delay**
- **1 relay for overspeed detection and 1 relay for underspeed detection**
- **Sealed relays with hard gold plated contacts**
- **Universal supply voltage (20...250 VUC)**

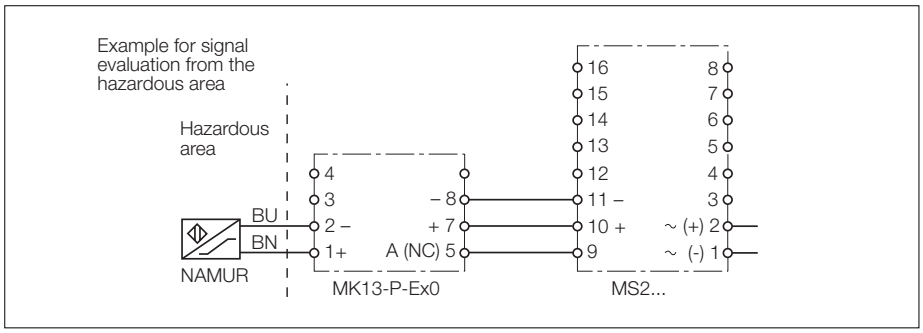

The MS28-R rotational speed monitors are used for underspeed or overspeed detection of a speed range. The device has two relay outputs, one for *overspeed* and one for *underspeed* detection. The device accommodates sensors according to EN 60947-5-6, 3-wire pnp sensors or other voltage sources with pulse levels from 10...30 VDC.
If a NAMUR sensor is used, the input circuit is monitored for wire-break and short-circuit conditions. During a fault condition, the output relays de-energise and the green LED turns to red. The two conditions can be distinguished by the yellow input pulse LED; wire-break causes it to turn off.
If a 3-wire sensor is used as input device, the power supply lines are monitored for wire-break only. Wire-break and short-circuit conditions on the output of the sensor are not detected.
Terminals 9 and 11 are the inputs for external signal sources. A 1...10 kΩ resistor must be connected between terminals 10 and 11 to suppress fault indications.
The parameters (Hz or min^{-1}) for the speed range as well as the range factor are jumper programmable using terminals 12, 13 and 14.

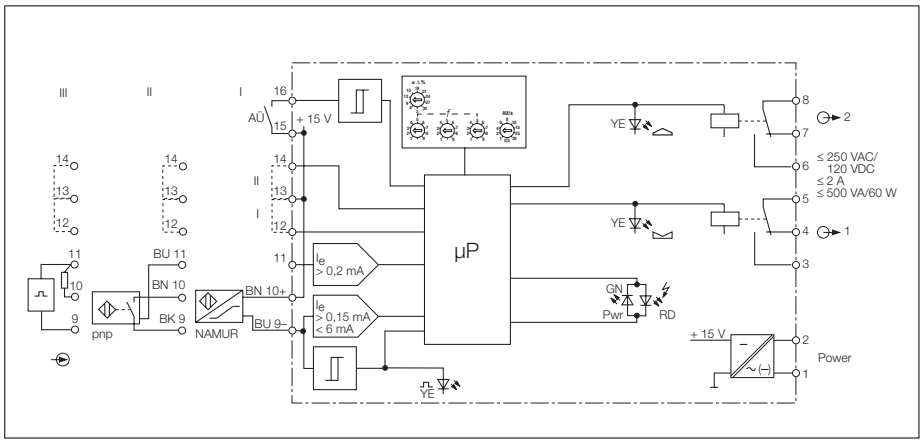

Window Discriminator MS28-R

There are four possibilities:

12	13	14	Factor	Range
○	○	○	1x	1...1000 min^{-1}
○	▬	○	10x	10...10000 min^{-1}
○	○	▬	0.01x	0.01...10 Hz
○	▬	▬	0.1x	0.1...100 Hz

The unit uses the digital pulse principle to detect underspeed and overspeed conditions. This method works well in applications with infrequent pulse indication and provides relatively short response times. The smallest measurable frequency is 10 mHz.

The nominal speed rate is set digitally using three switches on the front of the device. In addition, the device has an adjustable window range from 3...30 % in each direction which is programmed using a 10-position selector switch. During underspeed setpoint relay 1 is de-energised; during overspeed setpoint relay 2 is de-energised. A yellow LED indicates the status of each output relay.

The switching hysteresis of the output relays (as a percentage) relative to the nominal speed rate depends on the width of the adjusted sensing window:

Sensing window	Hysteresis
– 3, 6 and 9 %	1 %
– 12, 15, 18 and 21 %	2 %
– 24, 27 and 30 %	3 %

During drive system start-up, a built-in start-up time is available. The time delay is set with the front cover AU potentiometer. The output relay (setpoint 1) is energised during the start-up time delay to prevent that the system is brought to a stop when the input rate is less than the preset limit value. The start-up time delay is triggered under two conditions: by connecting a potential-free contact between terminals 15 and 16 while the device is powered, or by applying power to the device after the terminals have been linked.

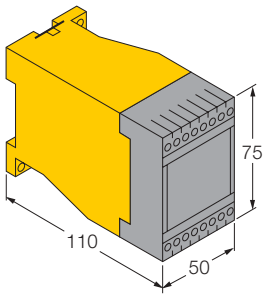

Type	MS28-R
Ident-no.	0508512
Supply voltage U_B	20...250 VUC
Line frequency (AC)	40...70 Hz
Power consumption	≤ 3 W
Galvanic isolation	between input circuit, output circuit and supply voltage for 250 V_{rms} test voltage 2.5 kV_{rms}
Rotational speed monitoring	overspeed and underspeed monitoring
Measuring range	1...10 000 min^{-1} or 0.01...100 Hz
Setpoint window range	± 3...30 % (with reference to the nominal speed range)
Input frequency	≤ 150 000 min^{-1}
Pause duration	≥ 0.2 ms
Pulse duration	≥ 0.2 ms
Hysteresis	1. 2 or 3 % (depending on the preset window)
Start-up time delay	0.5…30 s (adjustable)
Repeat accuracy	≤ 0.1 %
Temperature drift	≤ 0.005 %/K
Clearences and creepage distances	
– Input circuit to output circuit	≥ 4 mm
– Input circuit to power supply	≥ 4 mm
Input circuits	NAMUR/3-wire, pnp
NAMUR input	according to EN 60947-5-6, terminals 9/10
– Operating characteristics	U_0 = 8.2 V; I_k = 8.2 mA
– Switching threshold	1.4 mA ≤ I_e ≤ 1.8 mA
– Wire-break threshold	≤ 0.15 mA
– Short-circuit threshold	≥ 6 mA
3-wire input	pnp, terminals 9…11
– Operating characteristics	U ≤ 15 V; I ≤ 30 mA
– "ON" signal	0…5 VDC
– "OFF" signal	10…30 VDC
Output circuits	two relay outputs
Relay output	1 SPDT contact
– Switching voltage	≤ 250 V
– Switching current	≤ 2 A
– Switching capacity	≤ 500 VA/60 W
– Contact material	silver-alloy + 3 µm Au
LED indications	
– Power/Fault indication	green/red (2-colour LED)
– Switching status	yellow
– Pulse indication	yellow
Housing	50 mm wide, Polycarbonate/ABS
Mounting	panel mounting or snap-on clamps for top-hat rail (DIN 50022)
Connection	2 x 8 self-lifting pressure plates
Connection profile	≤ 2 x 2.5 mm^2 or 2 x 1.5 mm^2 with wire sleeves
Degree of protection (IEC 60529/EN 60529)	IP20
Operating temperature	-25…+60 °C

ANALOGUE DATA TRANSMITTERS/ TRANSDUCERS

Hans Turck GmbH & Co.KG • D–45466 Mülheim/Ruhr • Tel. 0208/4952-0 • Fax 0208/4952-264 • E-Mail: turckmh@mail.turck-globe.de • www.turck.com

Analogue Data Transmitters/Transducers Selection Guide

Housing Style *interfacemodul*

Type / Housing	IM33-11Ex-Hi	IM33-22Ex-Hi	IM33-FSD-Ex/L	IM34-11Ex-i	IM34-12-Ex-Ri	IM34-11Ex-Ci	IM34-12Ex-CRi	IM35-11Ex-Hi	IM35-22Ex-Hi	IM36-11Ex-i	IM36-11Ex-U
	interface modul										
Functions											
Analogue data transmitter	•	•						•	•		
2-wire loop isolator			•								
HART® 2-wire loop isolator	•	•									
HART® analogue data transmitter								•	•		
Potentiometer transducer										•	•
Pt100 transducer				•	•	•	•				
Thermocouple transducer				•	•	•	•				
Current driver											
Voltage/current-to-frequency conv.											
Processor card with PC interface						•	•				
Galvanic isolation											
Input circuit to output circuit	•	•	•	•	•	•	•	•	•	•	•
Input circuit to power supply	•	•	•	•	•	•	•	•	•	•	•
Output circuit to power supply	•	•	•	•	•	•	•	•	•	•	•
Number of channels	1	2	2	1	1	1	1	1	2	1	1
Inputs (optional)											
Intrinsically safe acc. to EN 50014/20	•	•	•	•	•	•	•			•	•
Current input passive	•	•	•					•	•		
Current input 0/4…20 mA, active	•	•									
Voltage input											
Voltage input 2…10 V											
Variable current input $\Delta I \geq 2$ mA											
Variable voltage input 0/1…10 V											
Potentiometer supply 10 V										•	•
Pt100 RTDs, 2-3-4 wire				•	•	•	•				
Pt/Ni100/Cu25…1000											
Voltage input -160...+160 mV				•	•	•	•				
Thermocouple input				•	•	•	•				
Resistor input										•	•
Output Circuits (parallel)											
Intrinsically safe per EN 50020								•	•		
Current output	•	•	•	•	•	•	•	•	•	•	
Current output 0/4…20 mA	•	•		•	•	•	•	•	•	•	
Voltage output			•								•
Pt100											
Alarm output											
No. of setpoint controls/alarm outputs											
Relay, 1 SPDT					•		•				
Transistor, pnp											
Supply Voltage											
24 VDC	•	•						•	•	•	•
115 VAC											
230 VAC											
Universal power supply				•	•	•	•				
(20...250 VAC/20...125 VDC)				•	•	•	•				
Data sheet – see page	25	27	29	37	37	43	43	49	51	59	59

3

Analogue Data Transmitters/Transducers Selection Guide

Housing Style *multimodul multisafe® multicart®*

Type / Housing	MK31-...Ex0-Li	MK31-...Ex0-LU	MK31-...-Li	MK31-...-LU	MK31-114Ex0-LU	MK32-11Ex0-Li	MK32-11-Li	MK33-11Ex-HLi	MK33-11Ex0-Li	MK33-11Ex0-PLi	MK35-11Ex-HLi	MK35-11Ex0-Li	MK35-11Ex0-LU	MS31-LiU
	multi modul													multi safe
Functions														
Analogue data transmitter	•	•	•	•	•							•	•	•
2-wire loop isolator									•	•				
HART® 2-wire loop isolator								•						
HART® analogue data transmitter											•			
Potentiometer transducer														
Pt100 transducer						•	•							
Thermocouple transducer														
Current driver														
Voltage/current-to-frequency conv.														
Transducer														
Processor card with PC interface														
Galvanic isolation														
Input circuit to output circuit	•	•	•	•	•	•	•	•	•	•	•	•	•	•
Input circuit to power supply	•	•	•	•	•	•	•	•	•	•	•	•	•	•
Output circuit to power supply	•	•	•	•	•	•	•	•	•	•	•	•	•	•
Number of channels	1	1	1	1	1	1	1	1	1	1	1	1	1	1
Inputs (optional)														
Intrinsically safe acc. to EN 50014/20														
Current input passive	•	•			•	•			•	•	•	•	•	
Current input 4…20 mA, active	•	•	•	•				•			•	•		
Voltage input									•	•				•
Voltage input 2…10 V	•	•	•	•	•								•	
Variable current input ΔI ≥ 2 mA	•	•	•	•										•
Variable voltage input 0/1…10 V														
Potentiometer supply 10 V														•
Pt100 RTDs, 2-3-4 wire														•
Pt/Ni100/Cu…1000						3/4	3/4							•
Voltage input 0...60 mV														
Thermocouple input					•									
Resistor input					•									
Output Circuits (parallel)														
Intrinsically safe per EN 50020														
Current output								•			•	•	•	
Current output 0/4…20 mA	•		•			•	•	•	•	•	•	•		•
Voltage output	•		•			•	•		•	•		•		
Pt100		•		•	•								•	•
Alarm output														
No. of setpoint controls/alarm outputs														
Relay, 1 SPDT														
Transistor, pnp														
Supply Voltage														
24 VDC	•	•	•	•	•	•	•	•	•	•	•	•	•	•
115 VAC														
230 VAC														•
Data sheet – see page	13	13	15	15	17	21	23	31	33	35	53	55	57	19

Hans Turck GmbH & Co.KG • D–45466 Mülheim/Ruhr • Tel. 0208/4952-0 • Fax 0208/4952-264 • E-Mail: turckmh@mail.turck-globe.de • www.turck.com

multicart®															Temperature transducer		
MC30-28-Li	MC30-SG20-i	MC31-121Ex0-LRP	MC31-22AEx0-i	MC32-12Ex0-LRP	MC32-121Ex0-LRP	MC32-121Ex0-RP	MC32-11Ex0-Ri	MC33-121Ex0-LRP	MC33-12AEx0-i	MC33-22AEx0-i	MC33-12Ex0-Hi	MC33-22Ex0-Hi	MC34-121Ex0-LRP	MC35-22Ex0-i	KMP-Ex0-Li	KMU-Ex0-Li	KMU-Ex0-HLi
		•	•					•	•	•	•	•		•	•	•	
								•	•	•							
											•	•					
																	•
		•															
				•	•	•	•										
													•				
•									•		•						•
	•																
								•									
		•		•	•	•	•	•					•				
		•	•	•	•	•	•	•	•	•	•	•	•	•	•	•	•
•		•	•	•	•	•	•	•	•	•	•	•	•	•			
•	•	•	•	•	•	•	•	•	•	•	•	•	•	•			
2	1	1	2	1	1	1	1	1	1	2	1	2	1	2	1	1	1
		•	•	•	•	•	•	•	•	•	•	•	•		•	•	•
•		•	•								•	•		•			
								•	•	•	•	•					
		•													•	•	•
		•															
		•															
		•															
				•	•	•	•								•	•	•
															•	•	•
													•			•	•
		•														•	•
4																	
														•			
•	•	•	•	•	•		•	•	•	•	•	•	•	•			
				•	•		•	•					•		•	•	•
		•		•	•			•	•	•	•	•	•				
				•													
		2		1	2	2	1	2					2				
		•		•	•	•	•	•					•				
		•		•	•	•	•	•					•				
•	•	•	•	•	•	•	•	•	•	•	•	•	•	•			
															see chapter 9, Accessories		
catalogue *multicart®*																	

3

Analogue Data Transmitters/Transducers

Summary of topics

Page 6: Requirements – Flexibility and precision
Page 6: Analogue data transmitters
Page 6: Methods of transmission and isolation of analogue signals
Page 8: Temperature control via thermocouples or Pt100 RTDs
Page 10: Glossary of terms

Advanced process control requires up-to-date process information and precise data available at all times. No longer is it enough to know that a preset temperature (limit value) has been reached or that some control closed or opened a valve. Today's applications require instruments to permanently measure, monitor and control temperatures and continuously adjust/correct e. g. valve positions to the actual process situation.

Simple switching devices do not meet these demands. Advanced devices are needed:

- sensors with analogue output that detect changes in physical variables and convert these into signals which can be read by the control system
- interface devices with analogue output to drive final controlling elements and display units.

Often, processing of analogue signals in hazardous environments is part of the application. For this purpose, measurement and control technology generally integrates electrical equipment that is approved for the hazardous area (”i”). This type of equipment is considered as particularly user-friendly. It is designed to limit the thermal and electrical energy to a point that ignition through sparks or thermal effects is not possible (page A-9).

Requirements - Flexibility and precision

There is no such thing as an universal interface to handle the variety of tasks performed by the different sensors and actuators. TURCK’s goal is therefore to provide a wide range of user-friendly devices that meet the majority of requirements for high precision and flexibility.

TURCK offers interface devices with:

- standardised input and output circuits
- complete galvanic isolation
- intrinsically safe input and output circuits
- Hart communication

The function group of analogue data transmitters includes all devices which transmit or process any kind of analogue signals:

- modules for galvanic isolation of signals
- isolating transducers
- thermo-element amplifiers
- potentiometer amplifiers
- gradient monitors
- setpoint devices

Analogue data transmitters

Analogue data transmitters are used to isolate and convert standard signals and to transfer these between the explosion hazardous area and the safe area.

If devices are needed for galvanic isolation or signal conditioning, TURCK offers an extensive product range including devices, which can be distinguished by their type codes starting with MK31-..., MS31-... and MC31-... . There are devices with intrinsically safe and non-intrinsically safe inputs available.

If signals have to be transferred from the non-hazardous area to the hazardous area, devices with the type codes MK35-... and MC35-... should be used.

Methods of transmission and isolation of analogue signals

Analogue signals are generally isolated and transferred using the following methods.

- voltage-to-frequency conversion (and vice-versa)
- transformer transmission
- pulse-width modulation

Each of these three methods has specific disadvantages and advantages. Generally, the pulse-width modulation method has the best transfer characteristics.

Pulse-width modulation is considered to be a safe transmission method. A pulse-width modulated signal is generated by comparing the input voltage with a delta voltage of constant amplitude. The pulse-width is proportional to the input voltage level. The modulated signal is isolated through an optocoupler. The output signal is generated by integration in a low-pass filter (fig. 1).

The pulse-width modulation mode only evaluates the pulse duty cycle of the transferred signal and not the signal frequency, as is the case with voltage-to-frequency and frequency-to-voltage conversion. Faults due to drifting of frequency critical components are eliminated. TURCK’s analogue data transmitters and transducers operate on the pulse-width modulation principle.

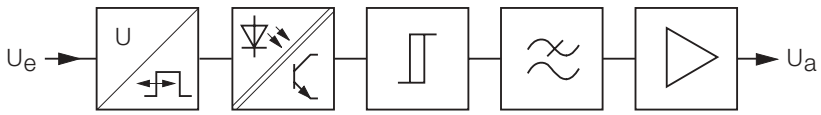

Fig. 1 Analogue signal processing – pulse-width modulation

 Hans Turck GmbH & Co.KG • D–45466 Mülheim/Ruhr • Tel. 0208/4952-0 • Fax 0208/4952-264 • E-Mail: turckmh@mail.turck-globe.de • www.turck.com

Isolating transducers

Isolating transducers feature a transducer in the input circuit which detects a physical variable such flow, temperature, or differential pressure signals. It converts these input signals into an electrical value. Analogue data transmitters can process signals from 2-, 3- or 4-wire devices (fig.2).

In most cases, the transducer interface is integrated into the field device. For signal processing in Ex-applications an isolating transducer is used to power the transducer, to isolate and convert the signal and to provide a standard current or voltage signal at the output. This method requires the use of transducers, which match the measuring range, and convert the change of a physical variable at the transducer input into a standard signal of 0/4...20 mA.

This signal processing method has the advantage that standard transducers can be used, e.g. for temperature evaluation or flow rate monitoring, and that standard field signals, even intrinsically safe signals, can be processed.

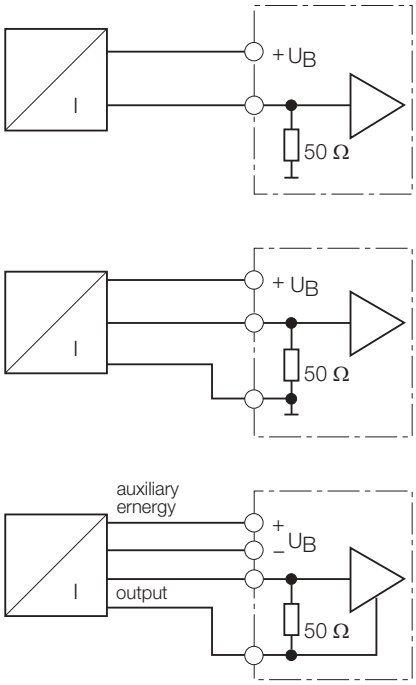

Fig. 2 Connection of transducers

The processor (isolating transducer) used is the same for all applications. The use of two devices is generally required for this type of measurement:

- field transducer, type and version depend on the measuring task
- isolating transducer suited for 2-, 3- or 4-wire technology.

This type of measurement excludes a direct display of a physical input variable in the signal processor, because only the nominal signal (and not the measured signal) is available. If new measuring applications are needed, then the field transducer must be replaced or modified.

Isolating transducers with display

The *Eurocard* style isolating transducer is provided with an adjustable display. A value pair between -999...9999 is assigned to the standard 4...20 mA input signal to show a physical variable. The display changes with every change in the input signal.

Isolating transducers for transfer of HART® signals

Technical progress has lead to the development of new digital devices with internal processors, enhancing the possibilities of analogue field devices. These new devices provide more convenient measurement and operating techniques. Advanced digital field transducers incorporate a defined digital interface. Special isolating transducers are needed for this interface.

An interface, which has achieved standardisation, is the HART® protocol. This protocol enables connection of exisiting 2-wire transducers. The analogue signal on the connection cable is superimposed by a frequency signal. The frequency signal contains coded digital data. Standard isolating transducers are not able to transfer the frequency signal due to the hight frequency level. Therefore special devices had to be designed to transfer signals from and into the hazardous area according to HART® standard.

When using a combination of HART® compatible field transducers and isolating transducers, it is possible to determine the analogue measuring value by using a handheld device or an input of a control system. In addition, digital data can be transmitted, e.g. pressure values, medium temperature and diagnosis data of a transducer for differential pressure measurement. Another advantage is the adjustment of the measuring range to the process via the control system.

Analogue Data Transmitters/Transducers

Temperature measurement

In today's industry, the transition between the standard concepts used to measure temperature is very smooth. Application and price considerations are usually the dividing line separating the different processes. Independent from the above criteria, the following measurement systems are available for a variety of applications and temperature ranges:

0...800 °C:	fluid-gases or pressure spring-thermometers
-100...+600 °C:	Pt100 resistance temperature detectors (RTDs)
-270...1800 °C:	thermo-elements
200...3400 °C:	total or narrow band pyrometers

Two operation principles have gained major importance in the context of industrial temperature control.

Fluid-gases or pressure spring-thermometers operate on the principle of expansion through thermal effect. In most gases they have a switching contact that produces a signal when a preset temperature has been reached.

The most common methods are those that use a temperature sensing probe in conjunction with either Pt100 resistors or thermo-elements.

The particular differences between the two methods are explained on the next page.

Temperature control via thermocouples or Pt100 RTDs

Thermocouples

When two different metals are joined and the two metals are subjected to different temperatures, a dependent contact voltage (thermo-electric force/Seebeck effect) is generated.

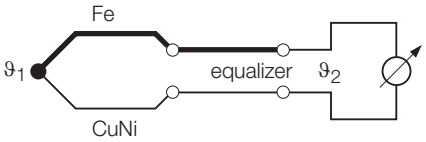

The amount of voltage generated depends on the metal types and on the temperature. This thermo-electric force is used for measurements, utilizing the connected ends of the wire as a measuring point and bringing the open ends of the wires to a constant or measurable temperature (reference junction). The thermo-electric force directly reflects the difference in temperature between measuring point and reference point. Therefore, temperature control with thermocouples does not provide an absolute but a relative temperature indication.

To avoid mistakes, the cables from the thermocouple (measuring point) to the reference junction must have the same thermo-electric characteristics as the thermocouple itself. These cables are called equalizing conductors. They are colour coded for easy match up with the respective thermocouple.

For price reasons, compensating conductors are not made of the same material as the thermocouple itself. The reference junction can also be located close to the measuring point. In that case, the reference temperature must be measured (external reference junction) or known (thermostat). The temperature difference between reference and measuring point should be kept as small as possible. If it is not possible to use an external reference junction, it must be ensured that the measuring point and the internal reference junction have the same temperature.

The most commonly used thermocouples according to DIN IEC 584-1 are:

Type	Code	Thermo-voltage Measuring range
Cu-CuNi	T	-6.26 ... 20.87 mV -270 – 400 °C
NiCr-CuNi	E	-9.84 ... 76.36 mV -270 – 1000 °C
Fe-CuNi	J	-8.1 ... 69.54 mV -210 – 1200 °C
NiCr-Ni	K	-6.46 ... 54.88 mV -270 – 1372 °C
PtRh13-Pt	R	-0.23 ... 21.10 mV -50 – 1769 °C
PtRh10-Pt	S	-0.24 ... 18.69 mV -50 – 1769 °C
PtRh30-PtRh6	B	0 ... 13.81 mV 0 – 1820 °C

Temperature-isolating transducers with PACT*ware*™, FDT/DTM software support

Some isolating transducers can be configured or parameterised using DTM (Device Type Manager). More detailed information can be found on page A – 22 or on the Internet at www.pactware.de.

Pt100 Measuring amplifiers

The Pt100 resistor is made of platinum. It changes its value with the temperature. 2-, 3- or 4-wire Pt100 resistors may be connected to the measuring transducer.

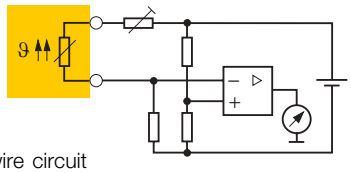

2-wire circuit

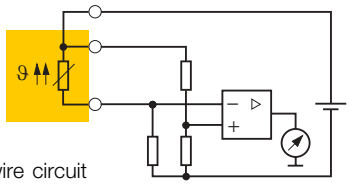

3-wire circuit

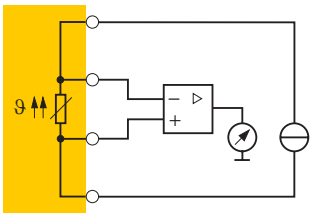

4-wire circuit

Fig. 3 2-, 3- or 4-wire connection

Due to their precision and repeatability, platinum resistance elements (Pt100) are key elements in standard industrial temperature control applications. The fundamental value ranges for platinum resistance elements can be found in IEC 751. Operating ranges are from -200...+850 °C; the most common range is from -100...+600 °C for standard transducers with no additional protective measures or special housings.

Depending on the type of Pt100 RTDs connected, different faults can result:

- 2 wire circuit:
  The resistance of the cable to the Pt100 must be considered prior to operation as it may alter the measurements. Fluctuations in temperature can contribute to variances in the line resistance and deviate the final measurements.
- 3-wire circuit:
  With this type of connection, the third line is used to compensate for temperature fluctuations. The compensation circuitry results in a measuring error of typically 0.1 %. The disadvantage here, when compared to the 2-wire configuration, is the additional cable.
- 4-wire circuit:
  A 4-wire connection does not produce any additional measuring errors. The additional line compensation is not required. The only disadvantage is wiring of 4 connections.

Line compensation for 2-wire circuits

RTDs in 2-wire configuration require a stabilising resistor in order to compensate the resistance of the connecting cable. With TURCK transducers, line compensation can be carried out via the transducer. If the transducer operates with a measuring probe in a 3-wire or 4-wire configuration, line compensation is carried out automatically.

Inputs:
The input circuit used may be intrinsically safe and enable signal processing from 2-, 3-, or 4-wire Pt100 RTDs. When 2-, 3-, or 4-wire RTDs are connected, the circuit is monitored for wire-break and short-circuit conditions.

Outputs:
The following outputs are available (some versions feature outputs operating in parallel):

- current output 0/4...20 mA
- voltage output 0...10 V
- limit value outputs:
  relay and transistor, pnp
- alarm outputs

Comparison: Thermocouples and resistance temperature detectors (RTDs)

- **Thermocouples:**
- non-linear characteristic curve
- fast response times
- line compensation / reference point required
- different couples needed for different applications
- active element subject to wear, such as corrosion, oxydation and aging
- variations in measured value are due to reference drift and corrosion
- line monitoring for short-circuits is difficult (a short-circuit may result in new thermocouples)
- **Resistance Temperature Detectors (RTDs):**
- nearly linear characteristic curve
- passive operation, therefore particularly well suited for intrinsically safe applications
- standard devices for a wide variety of applications
- line can be monitored for wire-break and short-circuit conditions
- absolute temperature indication

Possible applications with thermocouples and RTDs

1. Option: A field transducer is located in the terminal housing of the measuring device; the signal is processed via the isolating transducer.

This method requires an initial transducer tuned to the range of the measuring element that converts the change in the resistance of the Pt100 or the thermoelectric force of the thermocouples into a standard 4...20 mA current signal.

Analogue Data Transmitters/Transducers

This signal is then picked up and processed by a standard 2-wire isolating transducer. Here, the advantage is that standard isolating transducers can be used for temperature control. They can also be used in the field with 4...20 mA current signals for intrinsically safe applications.

When monitoring the same temperature ranges throughout the entire plant, all initial transducers can be set up in the same way. If the temperature ranges vary, transducers suitable for the specific requirements, or signal conditioners must be used.

The signal processor or isolating transducer stays the same. The following three main components of these measurement systems are:

- sensing element (Pt100 RTD/ thermocouple)
- initial transducer, adjusted to the measuring element or range
- isolating transducer

With this measuring system, the signal processor does not give a direct temperature indication as only the standard signal is available and not a measuring signal. Modern isolating transducers have an adjustable display that can be set to show the 4...20 mA signal as a temperature reading. New measuring ranges can be realised only by exchanging or re-calibrating the initial transducer.

2. Option: Without Conversion of Signals in the Field.

The thermo-element or Pt100 is directly connected to the respective transducer.

An additional field device, which in this example is the initial transducer, is not required. Parameters necessary for the measuring operation such as range, type of thermocouple, reference point, 2-, 3-, or 4-wire Pt100 RTDs, are selected during programming.

This application generally requires thermocouples or Pt100 RTDs that are compatible with the signal processor. It is important to use a freely adjustable signal processor. It is adapted to the specific application by setting the upper and lower limit of the analogue range, the high and low limit values, and by determining the output function in case of fault (wire-break and short-circuit in the sensor circuit).

Not every transducer can provide all these adjustments. The basic concepts are as follows:

- Transducers with a fixed (pre-determined) measuring range. These are used when the measuring task is clearly defined and only one distinctive range is required. Any changes in the range can be quite costly (new device) and time consuming (order and delivery time).

- Transducers with the option to select a measuring range by means of additional components. These transducers have a so called measuring module or range module that allow replacement with a different module without changing the whole system when the application requires a different monitoring range. As above, the measuring range must be known at the time of order. The advantage of this version is that it has an adjustable operating range which can be modified subsequently without having to replace the entire transducer.

- Transducers with freely selectable monitoring range. These transducers provide a wide operating range with the upper and lower limits freely selectable in increments. In most cases, these transducers may be connected to Pt100 RTDs in 2-, 3- and 4-wire configurations. These devices are accurately programmable for a specific application and measuring range modifications can be carried out at any time.

Glossary of Terms

Standard analogue current signal

In process control, the analogue current signal (standard signal) is a current signal that is used to transmit measuring values. The most common levels are 0...20 mA and 4...20 mA. Analogue data transmitters for input signals from 0/1...5 mA and a signal output of 0/4...20 mA are also available.

Standard analogue voltage signal

In process control, the analogue voltage signal (standard signal) is a signal used to transmit measuring values. The most common are 0...10 VDC, 2...10 VDC, or 0...5 VDC, 1...5 VDC signals. The specific requirements are described in the respective standards.

Load

This is the sum of all electrical impedances connected to the current output of a device. The load determines the maximum power that will be consumed by the output circuit.

Load resistance

The sum of all electrical resistances connected to the voltage output of a unit is defined as load resistance. The load resistance indicates the minimum impedance which can be connected to the voltage output without affecting the performance of the unit.

Input resistance

The input resistance refers to the total resistance in the input circuit of a signal isolator. The input resistance represents the load for the input circuit.

Transmission functions

Measuring signals are classified according to their initial value:

- dead-zero signals
- live-zero signals

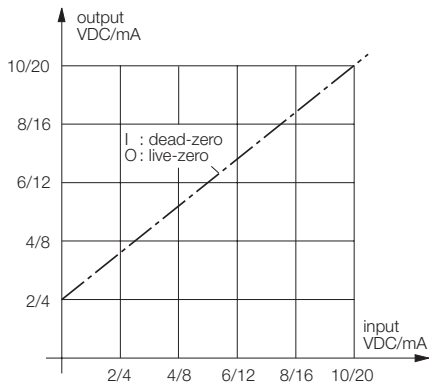

Fig. 4 Conversion of an input signal - dead-zero-signal to live-zero-signal

Live-zero signals

Current signals of 4..20 mA and voltage signals of 1...5 V and 2...10 V (those not starting at 0) are called live-zero signals. Figure 4 shows the typical conversion function of an analogue data transmitter which converts an input signal of 0...20 mA into a 4...20 mA live-zero signal.

2-wire transmitters typically require a minimum current to operate. Therefore, they always operate with live-zero signals.

During fault-free operation with live-zero signals, the current in the control circuit is never 0. Therefore, the control circuits can be monitored for wire-break.

Dead-zero signals

Current signals of 0...20 mA and voltage signals from 0...5 V and 0...10 V range (those starting at 0) are called dead-zero signals.

Dead-zero signals are used in 3-wire or 4-wire transducers. In the 4-wire configuration, transducer power and output circuit are separated from each other. With most 3-wire transducers, power and output circuits have a common potential.

Input circuit monitoring

Monitoring for wire-break and short-circuit of the inputs circuits, as in switching amplifiers, is not as common for analogue data transmitters and transducer. However, this feature can easily be provided.

Live-zero signals are inherently suited for monitoring the control circuit. Additional electronics monitor the current flow in the control circuit. Typically, a fault exists when the current is less than 2 mA (wire-break), or greater than 22 mA (short-circuit). An alarm output is available for fault indication.

Isolating transducers (type MC33 on Eurocard) have a relay and a transistor output to indicate faults in the input circuit.

In some cases, it is not sufficient to provide error indications via a separate alarm output, but to provide mode-specific signals to the control system. For this it is necessary to cause the analogue signal to automatically adopt a clearly defined output signal state in case of an error condition:

– maximum value 22 mA
– minimum value 0 mA
– unchanged value, following the input signal

Active current output

An active current output is an adjustable current source providing current to connected devices featuring a passive input.

Passive current output

A passive current output controls the current flow of an external voltage source. Devices connected to this output must be equipped with a supply input.

Installation guidelines

The sensor-specific installation requirements are listed in the according sensor catalogues. It is essential to meet these requirements to ensure correct operation.

When laying sensor cables, it is requested to follow the guidelines mentioned below:

– the sensor cable should be routed separately from the power cable
– prevent electro-magnetic interferences
– if long cables are needed, it is recommended to use shielded and earthed cables
– when using thermocouple measuring amplifiers with internal reference point compensation, it must be ensured that the reference point and the connection terminal are kept at the same temperature.

 Hans Turck GmbH & Co.KG • D–45466 Mülheim/Ruhr • Tel. 0208/4952-0 • Fax 0208/4952-264 • E-Mail: turckmh@mail.turck-globe.de • www.turck.com

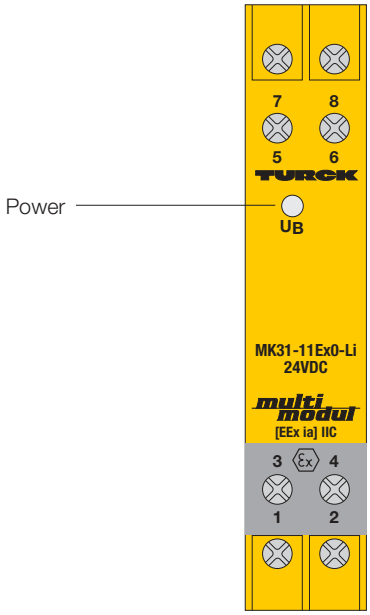

Current Repeater/ Voltage Repeater MK31-...Ex0-Li/24VDC MK31-...Ex0-LU/24VDC 1-channel

3

- **1-channel current repeater/voltage repeater**
- **Galvanic isolation of standard analogue signals**
- **Intrinsically safe input circuits EEx ia**
- **Area of application according to ATEX: II (1) G**
- **Input circuit: current or voltage**
- **Output circuit: current or voltage - depending on type**
- **Linearity ≤ 0.1 %**
- **Temperature drift ≤ 0.02 %/K of final value**

The MK31-…Ex0-Li and MK31-…Ex0-LU current/voltage repeaters are designed to isolate and transmit standard analogue signals from the explosion hazardous area to the non-hazardous area.
The devices provide a current and a voltage input which may be used alternatively. Depending on the type of device, the output is either a current or a voltage output. The function truth table lists the available versions with the respective ident-numbers and the transmission modes. The input circuits are galvanically isolated from the output circuits and from power supply. A green LED indicates that the device is powered.

MK31-...Ex0-Li

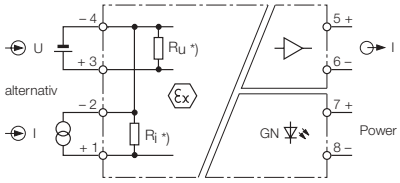

MK31-...Ex0-LU

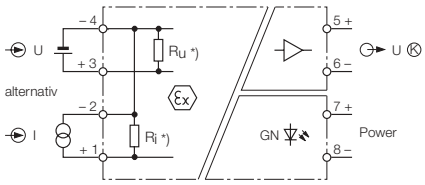

*) see page 3 – 14

Types – Transmission characteristics

Input \ Output	0...20 mA	4...20 mA	0...10 V	2...10 V	0...5 V	1...5 V
0...20 mA / 0...10 V	MK31-11Ex0-Li 7506005	MK31-111Ex0-Li 7506010	MK31-11Ex0-LU 7506205	MK31-111Ex0-LU 7506210	MK31-116Ex0-LU 7506222	MK31-121Ex0-LU 7506226
4...20 mA / 2...10 V	MK31-112Ex0-Li 7506015	MK31-11Ex0-Li 7506005	MK31-112Ex0-LU 7506215	MK31-11Ex0-LU 7506205	MK31-117Ex0-LU 7506223	MK31-116Ex0-LU 7506222
0...10 mA / 0...5 V	MK31-115Ex0-Li 7506017	MK31-113Ex0-Li 7506016	MK31-115Ex0-LU 7506221	MK31-113Ex0-LU 7506216	MK31-11Ex0-LU 7506205	MK31-122Ex0-LU 7506227
2...10 mA / 1...5 V	MK31-119Ex0-Li 7506019	MK31-115Ex0-Li 7506017	MK31-119Ex0-LU 7506224	MK31-115Ex0-LU 7506221	MK31-120Ex0-LU 7506225	MK31-11Ex0-LU 7506205
0...5 mA / 0...2.5 V		MK31-116Ex0-Li 7506020				

Current Repeater/Voltage Repeater MK31-...Ex0-Li/MK31-...Ex0-LU

Type	MK31-...Ex0-Li	MK31-...Ex0-LU
Ident-no.	see table page 3 – 13	see table page 3 – 13
Supply voltage U_B	19...29 VDC	19...29 VDC
Ripple W_{PP}	≤ 10 %	≤ 10 %
Current consumption	approx. 50 mA	approx. 50 mA
Galvanic isolation	between input circuit, output circuit and supply voltage for 250 V_{rms}, test voltage 2.5 kV_{rms}	between input circuit, output circuit and supply voltage for 250 V_{rms}, test voltage 2.5 kV_{rms}
Input circuits	intrinsically safe according to EN 50020	intrinsically safe per EN 50020
Voltage input (3 and 4)		
– Operating characteristics/Input resistance R_u	0/2…10 V (< 39 V)/50 kΩ 0/1…5 V (< 39 V)/70 kΩ 0...2.5 V (< 39 V)/90 kΩ	0/2…10 V (< 39 V)/50 kΩ 0/1…5 V (< 39 V)/70 kΩ
Current input (1 and 2)		
– Operating characteristics/Input resistance R_i	0/4…20 mA (< 40 mA)/100 Ω 0/2…10 mA (< 40 mA)/175 Ω 0...5 mA (< 23 mA)/325 Ω	0/4…20 mA (< 40 mA)/100 Ω 0/2…10 mA (< 40 mA)/175 Ω
Output circuits	current output	voltage output, short-circuit protected
Output current/load	see table/≤ 500 Ω	
Output voltage/load resistance		see table/≥ 500 Ω
Ex-approvals acc. to certificate of conformity	PTB 97 ATEX 2104	PTB 97 ATEX 2104
Maximum nominal values from both inputs		
– No load voltage U_0	7.2 V	7.2 V
– Short-circuit current I_0	1 mA	1 mA
Maximum values (external intrinsically sensors)		
– No load voltage U_i	40 V	40 V
– Power P_i	0.5 W	0.5 W
– Short-circuit current I_k	–	–
Max. external inductances/capacitances L_0/C_0		
– [EEx ia] IIC	1 H/13.5 µF	1 H/13.5 µF
Marking of devices	II (1) G [EEx ia] IIC	II (1) G [EEx ia] IIC
Transfer characteristics		
Linearity tolerance of setpoint adjustment	≤ 0.1 % of final value	≤ 0.1 % of final value
Measuring tolerance	≤ 0.2 %	≤ 0.2 %
Long term error	0.1 %/year	0.1 %/year
Ambient temperature sensitivity	≤ 0.02 %/K of final value	≤ 0.02 %/K of final value
Pulse rise time (10 %...90 %)	≤ 300 ms	≤ 300 ms
Release time (90 %...10 %)	≤ 300 ms	≤ 300 ms
LED indications		
– Power	green	green
Housing	8-pole, 18 mm wide, Polycarbonate/ABS flammability class V-0 per UL 94	
Mounting	snap-on clamps for top-hat rail (DIN 50022) or srew terminals for panel mounting	
Connection	via flat terminals with self-lifting pressure plates	
Connection profile	≤ 2 x 2.5 mm² or 2 x 1.5 mm² with wire sleeves	
Degree of protection (IEC 60529/EN 60529)	IP20	
Operating temperature	-25…+60 °C	

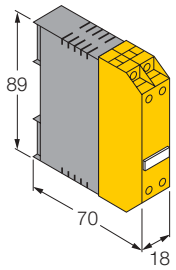

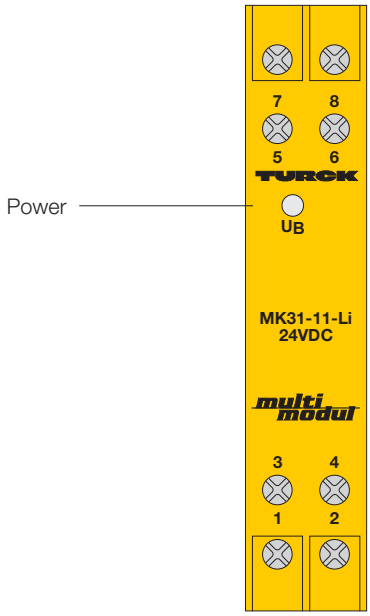

Current Repeater/ Voltage Repeater MK31-...-Li/24VDC MK31-...-LU/24VDC 1-channel

3

- **1-channel current repeater/voltage repeater**
- **Galvanic isolation of standard analogue signals**
- **Input circuits 0/2…10 V or 0/4…20 mA (selectable)**
- **Output circuits 0/4…20 mA or 0/2...10 V**
- **Linearity ≤ 0.1 %**
- **Temperature drift ≤ 0.02 %/K of final value**

The MK31-…-Li and MK31-…-LU are current/voltage repeaters designed to isolate standard analogue signals.

The devices provide a current and a voltage input which may be used alternatively. Depending on the type of device, the output is either a current or a voltage output. The function truth table lists the available versions with the respective ident-numbers and the transmission modes.
The devices feature galvanic isolation between the input circuits, output circuits and power supply.
Further devices with modified transfer characteristics on request. A green LED indicates that the device is powered.

O / I	**0...20 mA**	**4...20 mA**	**0...10 V**	**2...10 V**
0...20 mA **0...10 V**	MK31-11-Li 7506102	MK31-111-Li 7506103	MK31-11-LU 7506202	MK31-111-LU 7506203
4...20 mA **2...10 V**	MK31-112-Li 7506104	MK31-11-Li 7506102	MK31-112-LU 7506204	MK31-11-LU 7506202

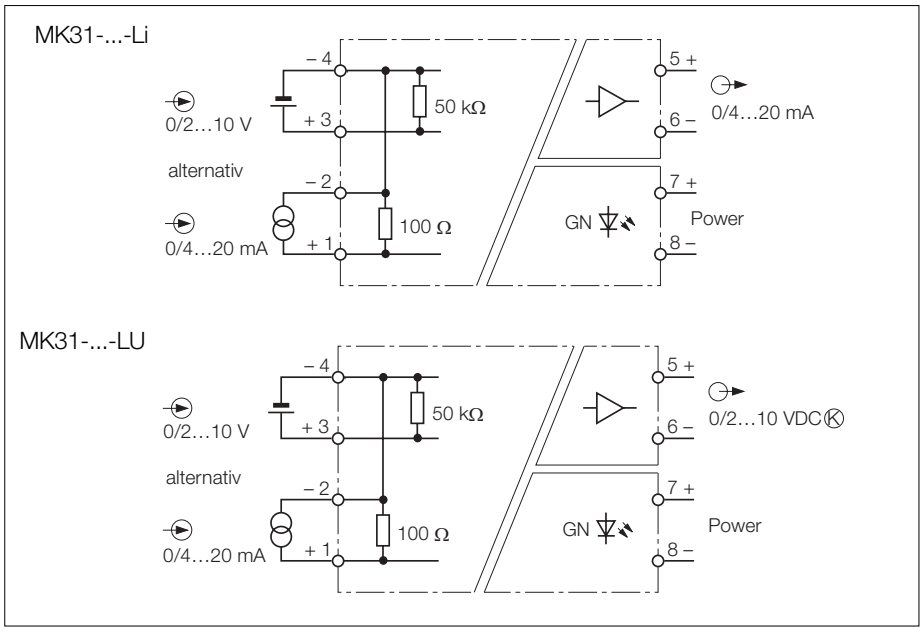

Current Repeater/Voltage Repeater MK31-...-Li/MK31-...-LU

Type	MK31-...Li	MK31-...LU
Ident-no.	see table page 3 – 15	see table page 3 – 15
Supply voltage U_B	19...29 VDC	19...29 VDC
Ripple W_{PP}	≤ 10 %	≤ 10 %
Current consumption	approx. 50 mA	approx. 50 mA
Galvanic isolation	between input circuit, output circuit and supply voltage for 250 V_{rms}, test voltage 2.5 kV_{rms}	between input circuit, output circuit and supply voltage for 250 V_{rms}, test voltage 2.5 kV_{rms}
Input circuits		
Voltage input (3 and 4)		
– Input resistance	50 kΩ	50 kΩ
– Operating characteristics	0/2…10 V (< 20 V)	0/2…10 V (< 20 V)
Current input (1 and 2)		
– Input resistance	100 Ω	100 Ω
– Operating characteristics	0/4…20 mA (< 40 mA)	0/4…20 mA (< 40 mA)
Output circuits	current output	voltage output, short-circuit protected
Load impedance	≤ 500 Ω	
Output current	0/4…20 mA	
Load resistance		≥ 500 Ω
Output voltage		0/2...10 V
Transfer characteristics		
Linearity tolerance of setpoint adjustment	≤ 0.1 % of final value	≤ 0.1 % of final value
Measuring tolerance	≤ 0.2 %	≤ 0.2 %
Long term error	0.1 %/year	0.1 %/year
Ambient temperature sensitivity	≤ 0.02 %/K of final value	≤ 0.02 %/K of final value
Pulse rise time	≤ 300 ms	≤ 300 ms
Release time	≤ 300 ms	≤ 300 ms
LED indications		
– Power	green	green
Housing	8-pole, 18 mm wide, Polycarbonate/ABS flammability class V-0 per UL 94	
Mounting	snap-on clamps for top-hat rail (DIN 50022) or srew terminals for panel mounting	
Connection	via flat terminals with self-lifting pressure plates	
Connection profile	≤ 2 x 2.5 mm^2 or 2 x 1.5 mm^2 with wire sleeves	
Degree of protection (IEC 60529/EN 60529)	IP20	
Operating temperature	-25…+60 °C	

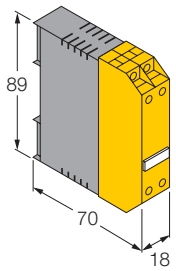

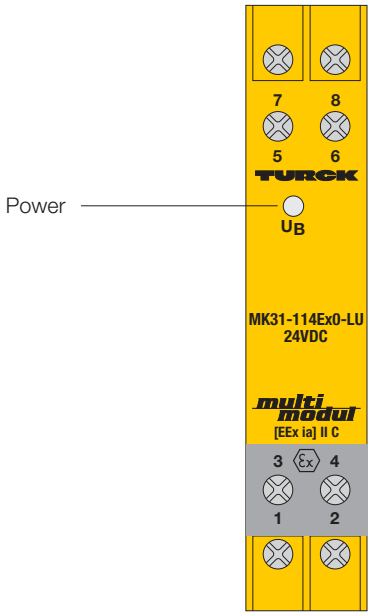

Analogue Data Repeater MK31-114Ex0-LU/24VDC 1-channel

3

- **1-channel analogue data repeater**
- **Galvanic isolation of voltage signals in the millivolt range**
- **Intrinsically safe input circuits EEx ia**
- **Area of application according to ATEX: II (1) G**
- **Input circuit 0…60 mV**
- **Output circuits 0…60 mV**
- **Linearity ≤ 0.1 %**
- **Temperature drift ≤ 0.02 %/K of final value**

The analogue data repeaters, type MK31-114Ex0-LU/24VDC, are designed to isolate and transfer analogue signals, e. g. from thermo-elements, from the explosion hazardous area to the non-hazardous area.

The input and output circuits are suited for voltage signals of 0…60 mV.

The devices feature galvanic isolation between the input circuits, output circuits and power supply.

Bipolar signal transmission is not possible. If negative voltages are to be transferred, the polarity of the inputs and outputs must be changed. When used in conjunction with thermo-elements this implies that either positive or negative temperature values can be transferred.

A green LED indicates that the device is powered.

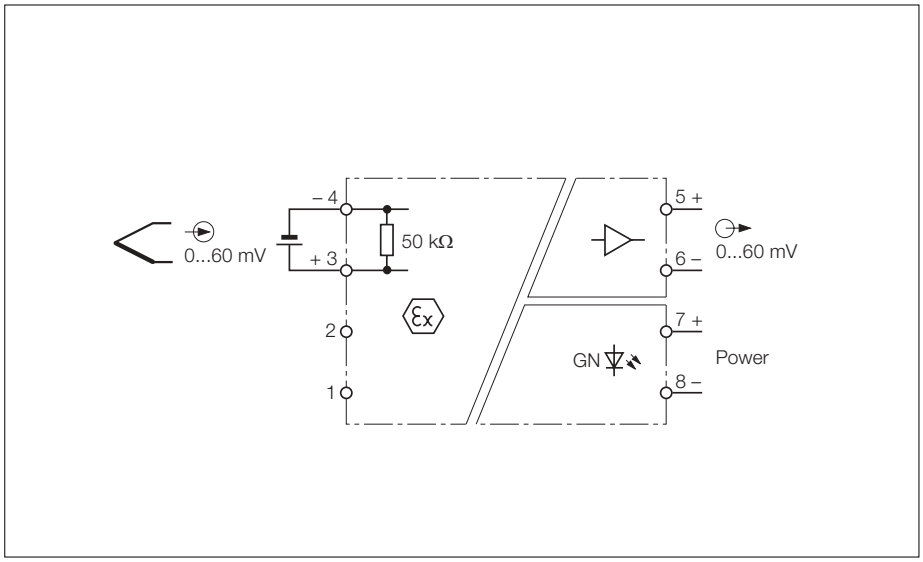

Analogue Data Repeater MK31-114Ex0-LU

Type	MK31-114Ex0-LU/24VDC
Ident-no.	7506220
Supply voltage U_B	19...29 VDC
Ripple W_{PP}	≤ 10 %
Current consumption	approx. 50 mA
Galvanic isolation	between input circuit, output circuit and supply voltage for 250 V_{rms}, test voltage 2.5 kV_{rms}
Input circuits	intrinsically safe according to EN 50020
Voltage input (3 and 4)	
– Input resistance	> 50 kΩ
– Operating characteristics	0…60 mV (< 20 V)
Output circuits	voltage output, short-circuit protected
Load impedance	–
Output current	–
Load resistance	≥ 500 Ω
Output voltage	0…60 mV
Ex-approvals acc. to certificate of conformity	PTB 97 ATEX 2104
Maximum values	
– No load voltage U_0	7.2 V
– Short-circuit current I_0	1 mA
Maximum values (external sensors)	
– No load voltage U_I	40 V
– Power P_I	0.5 W
– Short-circuit current I_k	–
Max. external inductances/capacitances L_0/C_0	
– [EEx ia] IIC	1000 mH/13.5 µF
Marking of devices	II (1) G [EEx ia] IIC
Transfer characteristics	
Linearity tolerance of setpoint adjustment	≤ 0.1 % of final value
Measuring tolerance	≤ 0.2 %
Long term error	0.1 %/year
Ambient temperature sensitivity	≤ 0.02 %/K of final value
Pulse rise time	≤ 300 ms
Release time	≤ 300 ms
LED indications	
– Power	green
Housing	8-pole, 18 mm wide, Polycarbonate/ABS flammability class V-0 per UL 94
Mounting	snap-on clamps for top-hat rail (DIN 50022) or srew terminals for panel mounting
Connection	via flat terminals with self-lifting pressure plates
Connection profile	≤ 2 x 2.5 mm² or 2 x 1.5 mm² with wire sleeves
Degree of protection (IEC 60529/EN 60529)	IP20
Temperature range	-25…+60 °C

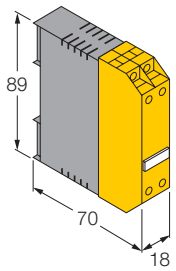

 Hans Turck GmbH & Co.KG • D–45466 Mülheim/Ruhr • Tel. 0208/4952-0 • Fax 0208/4952-264 • E-Mail: turckmh@mail.turck-globe.de • www.turck.com

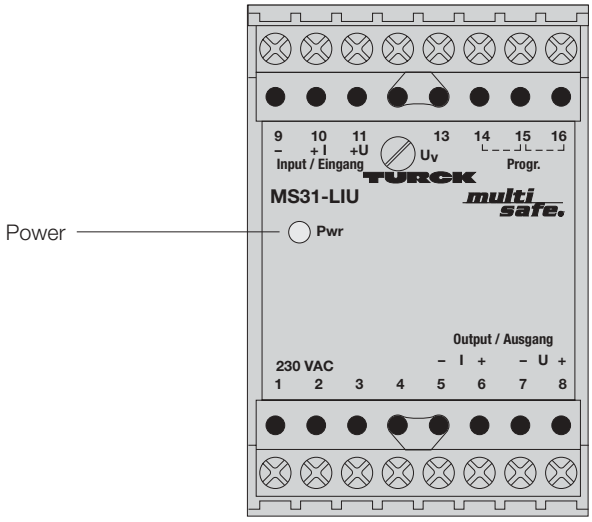

Analogue Data Repeater MS31-LiU/24VDC MS31-LiU/230VAC 1-channel

3

- **1-channel analogue data repeater**
- **Isolation and conversion of standard analogue signals**
- **Galvanic isolation between input circuit, output circuit and supply voltage**
- **Linearity ≤ 0.1 %**
- **Temperature drift ≤ 0.005 %/K of final value**
- **Voltage and current output, simultaneous operation**
- **Selectable current or voltage input**

The dual channel MS31-LiU analogue data repeater isolates, converts and repeats standard analogue signals, and passes the converted signals to a user defined output.

The input circuit accepts a standard current input (0/4...20 mA), a standard voltage input (0/2...10 V) or a variable voltage input (0...1 - 10 V).

The transfer characteristic of the analogue data repeater is programmed with bridge connectors (refer to drawing on next page). By this method, dead-zero signals are converted to live-zero signals (or vice-versa). In addition, current signals can be converted to voltage signals and voltage signals to current signals.

The analogue output signal can be passed to both outputs which may be used simultaneously.

The power supply is isolated from the input circuit, output circuit and supply voltage.

A green LED indicates that power is supplied to the device.

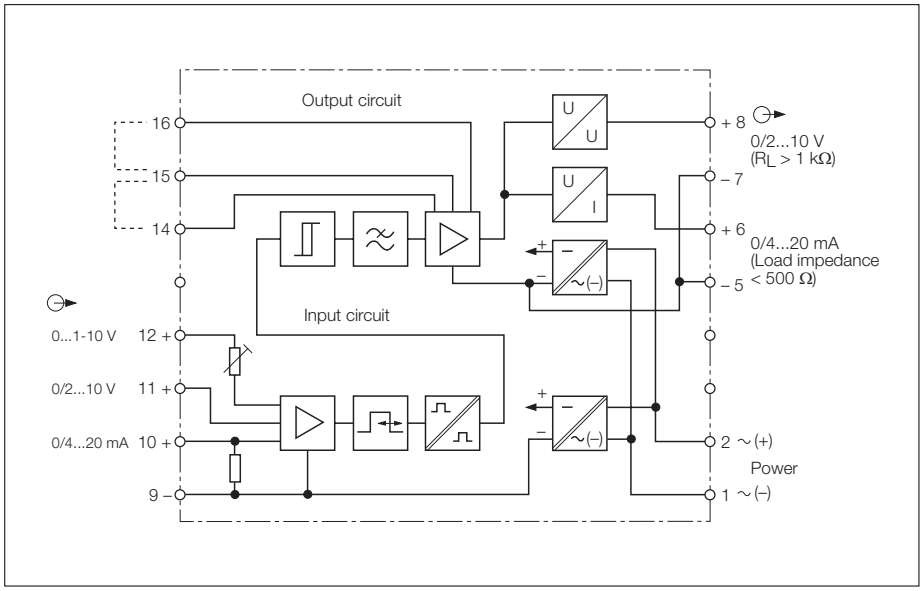

Analogue Data Repeater MS31-LiU

Type	MS31-LiU/230VAC	MS31-LiU/24VDC
Ident-no.	05310	05317
Supply voltage U_B	184...264 VAC	19.2...28.8 VDC
Line frequency/ripple W_{PP}	48…62 Hz	≤ 10 %
Power consumption	≤ 5 VA	≤ 3 W
Galvanic isolation	between input circuit, output circuit and supply voltage for 250 V_{rms}, test voltage 2.5 kV_{rms}	between input circuit, output circuit and supply voltage for 250 V_{rms}, test voltage 2.5 kV_{rms}
Input circuits		
Voltage input		
– Input resistance	50 kΩ	50 kΩ
– Operating characteristics	0/2…10 V	0/2…10 V
Current input		
– Input resistance	50 Ω	50 Ω
– Operating characteristics	0/4…20 mA	0/4…20 mA
Variable voltage input		
– Input resistance	5 kΩ/V	5 kΩ/V
– Operating characteristics	0…1–10 V	0…1–10 V
Output circuits		
Voltage output	0/2...10 V	0/2...10 V
– Load resistance	≥ 1 kΩ	≥ 1 kΩ
Current output	0/4...20 mA	0/4...20 mA
– Load impedance	≤ 500 Ω	≤ 500 Ω
Transfer characteristics		
Linearity tolerance	≤ 0.1 % of final value	≤ 0.1 % of final value
Load impedance	≤ 0.01 % of final value	≤ 0.01 % of final value
Effect of load impedance	≤ 0.01 % of final value	≤ 0.01 % of final value
Conversion error (U->I; I->U)	≤ 0.1 % of final value	≤ 0.1 % of final value
Ambient temperature sensitivity	≤ 0.005 %/K of final value	≤ 0.005 %/K of final value
Pulse rise time (10 %…90 %)	< 50 ms	< 50 ms
Release time (90 %…10 %)	< 50 ms	< 50 ms
LED indications		
– Power	green	green
Housing	50 mm wide, Polycarbonate/ABS	50 mm wide, Polycarbonate/ABS
Mounting	panel mounting or snap-on clamps for top-hat rail (DIN 50022)	panel mounting or snap-on clamps for top-hat rail (DIN 50022)
Connection	2 x 8 self-lifting pressure plates	2 x 8 self-lifting pressure plates
Connection profile	≤ 2 x 2.5 or 2 x 1.5 mm^2 with wire sleeves	≤ 2 x 2.5 or 2 x 1.5 mm2 with wire sleeves
Degree of protection (IEC 60529/EN 60529)	IP20	IP20
Operating temperature	-25...+60 °C	-25...+60 °C

Programming

Selection of transfer functions
- 1:1 transfer
- Dead-zero conversion
- Live-zero conversion
- Current/voltage conversion
- Voltage/current conversion

Inputs	Transmission functions	Outputs	Jumpers 14 15 16
0...20 mA or 0...10 V	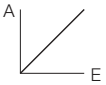	0...20 mA and 0...10 V	○ ○ ○
0...20 mA or 0...10 V	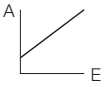	4...20 mA and 2...10 V	○—○ ○
4...20 mA or 2...10 V	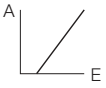	0...20 mA and 0...10 V	○ ○—○

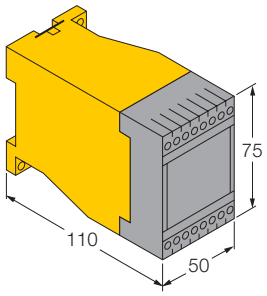

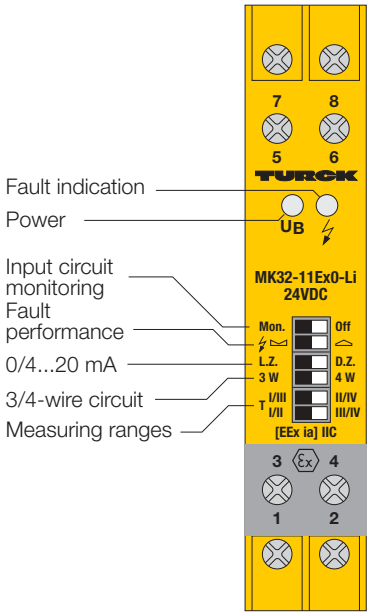

Pt100 Measuring Amplifier MK32-11Ex0-Li/24VDC 1-channel

3

- **1-channel Pt100 measuring amplifier**
- **Intrinsically safe input circuits, EEx ia, with static wire-break and short-circuit monitoring**
- **Area of application according to ATEX: II (1) G**
- **Input for Pt100 RTDs (resistance temperature detector) in 3- or 4-wire versions**
- **Operating range -50…+600 °C**
- **4 adjustable measuring ranges**
- **Current output 0/4…20 mA**
- **Galvanic isolation between input circuit, output circuit and supply voltage**
- **Programmable output performance in case of faults in the input circuit**

The Pt100 measuring amplifier MK32-11Ex0-Li evaluates the temperature dependent changes in resistance of a Pt100 resistance temperature detector (IEC 751) and transmits them as linear 0/4…20 mA current signals.

A green LED indicates that the device is powered.

The input circuit can be operated with Pt100 RTDs in 3- or 4-wire versions. The selection is carried out via a front panel switch.

The switch „Mon.“ activates input circuit monitoring for wire-break and short-circuit conditions. The current output performance in case input circuit errors can be programmed with the switch „ϟ“.
If the input circuit monitoring function is activated, a fault is indicated by either a 0 mA or a 22 mA signal and an illuminated red error LED.

If input monitoring is de-activated, the output signal follows the direction of the input signal (wire-break 0 mA, short-circuit 22 mA).

The measuring range is adjusted using two switches. The operating range of -200…+800 °C provides a preset selection of four measuring ranges:

T I	=	-50 ... +100 °C
T II	=	0 ... +200 °C
T III	=	0 ... +400 °C
T IV	=	0 ... +600 °C

TURCK offers the IM34... series for other measurement ranges and temperature sensors.

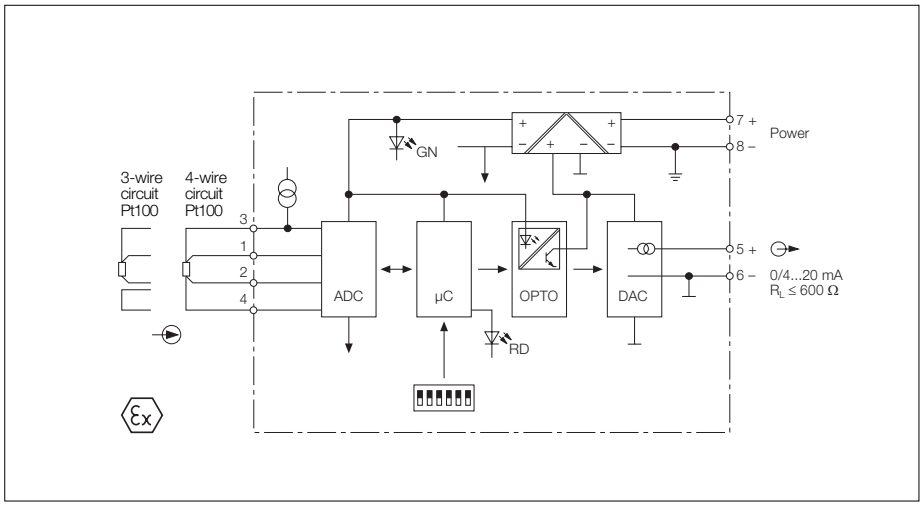

Pt100 Measuring Amplifier MK32-11Ex0-Li

Type	MK32-11Ex0-Li/24VDC
Ident-no.	75 090 05
Supply voltage U_B	19...29 VDC
Ripple W_{PP}	≤ 10 %
Current consumption	approx. 50 mA
Galvanic isolation	between input circuit, output circuit and supply voltage for 250 V_{rms} test voltage 2.5 kV_{rms}
Input circuits	intrinsically safe according to EN 50020
Version	Pt100 RTD (IEC 751), 3- and 4-wire versions
Input line resistance	< 200 Ω/cable
Sensor current	approx. 250 µA
Output circuits	
Current output	0/4…20 mA (load impedance ≤ 600 Ω)
Ex-approvals acc. to certificate of conformity	PTB 98 ATEX 2014
Input circuit	
Maximum values	
– No-load current U_0	6.6 V
– Short-circuit current I_0	2.5 mA
Max. external inductances/capacitances L_0/C_0	
– [EEx ia] IIC	1000 mH/22 µF
– [EEx ia] IIB	1000 mH/500 µF
Marking of device	II (1) G [EEx ia] IIC
Transfer characteristics	
Operating range	-50…+600 °C
Measuring range	4 measuring ranges (selectable via DIP-switches): T I = -50 ...+100 °C T II = 0 ...+200 °C T III = 0 ...+400 °C T IV = 0 ...+600 °C (other measuring ranges selectable ex factory)
Compensation error	≤ 0.1 % of measuring scale (ref. to -50...600 °C)
Load impedance	≤ 0.005 % of final value
Effect of load impedance	≤ 0.005 % of final value
Ambient temperature sensitivity	≤ 0.005 %/K of final value
Pulse rise time (10 %…90 %)	< 1 s
Release time (90 %…10 %)	< 1 s
LED indications	
– Power	green
– Fault indication	red
Housing	8-pole, 18 mm wide, Polycarbonate/ABS, flammability class V-0 per UL 94
Mounting	snap-on clamps for top-hat rail (DIN 50022) or srew terminals for panel mounting
Connection	via flat terminals with self-lifting pressure plates
Connection profile	≤ 2 x 2.5 mm^2 or 2 x 1.5 mm^2 with wire sleeves
Degree of protection (IEC 60529/EN 60529)	IP20
Operating temperature	-25…+60 °C

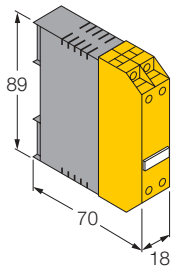

 Hans Turck GmbH & Co.KG • D–45466 Mülheim/Ruhr • Tel. 0208/4952-0 • Fax 0208/4952-264 • E-Mail: turckmh@mail.turck-globe.de • www.turck.com

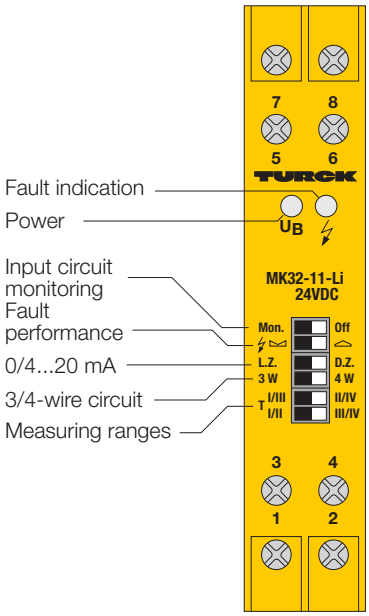

Pt100 Measuring Amplifier MK32-11-Li/24VDC 1-channel

3

- **1-channel Pt100 measuring amplifier**
- **Input circuits with static wire-break and short-circuit monitoring**
- **Input for Pt100 RTDs (resistance temperature detector) in 3- or 4-wire versions**
- **Operating range -50…+600 °C**
- **4 adjustable measuring ranges**
- **Current output 0/4…20 mA**
- **Galvanic isolation between input circuit, output circuit and supply voltage**
- **Programmable output performance in case of faults in the input circuit**

The Pt100 measuring amplifier MK32-11-Li evaluates the temperature dependent changes in resistance of a Pt100 resistance temperature detector (IEC 751) and transmits them as linear 0/4…20 mA current signals.

A green LED indicates that the device is powered.

The input circuit can be operated with Pt100 RTDs in 3- or 4-wire versions. The selection is carried out via a front panel switch.

The switch „Mon.“ activates input circuit monitoring for wire-break and short-circuit conditions. The current output performance in case input circuit errors can be programmed with the switch „⚡“.
If the input circuit monitoring function is activated, a fault is indicated by either a 0 mA or a 22 mA signal and an illuminated red error LED.

If input monitoring is de-activated, the output signal follows the direction of the input signal (wire-break 0 mA, short-circuit 22 mA).

The measuring range is adjusted using two switches. The operating range of -200…+800 °C provides a preset selection of four measuring ranges:

T I	=	-50 ... +100 °C
T II	=	0 ... +200 °C
T III	=	0 ... +400 °C
T IV	=	0 ... +600 °C

TURCK offers the IM34... series for other measurement ranges and temperature sensors.

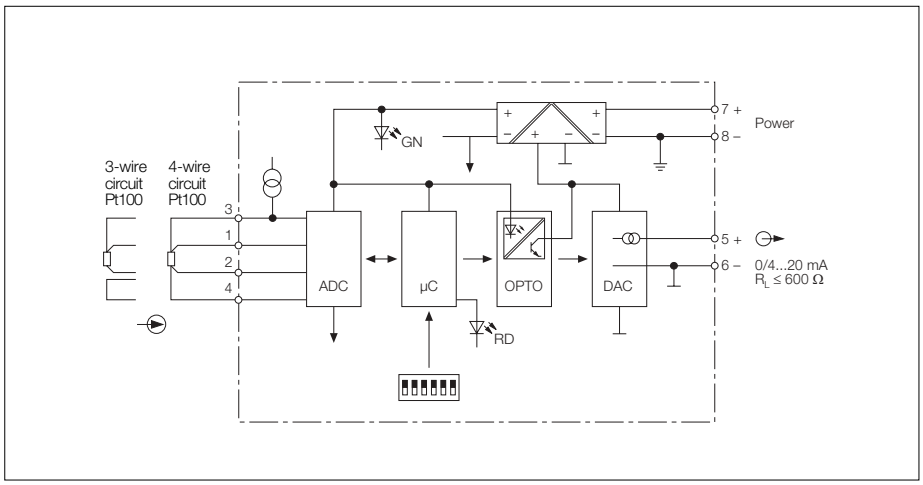

Pt100 Measuring Amplifier MK32-11-Li

Type	MK32-11-Li/24VDC
Ident-no.	7509000
Supply voltage U_B	19...29 VDC
Ripple W_{PP}	≤ 10 %
Current consumption	approx. 50 mA
Galvanic isolation	between input circuit, output circuit and supply voltage for 250 V_{rms} test voltage 2.5 kV_{rms}
Input circuits	
Version	Pt100 RTD (IEC 751), 3- and 4-wire versions
Input line resistance	< 200 Ω/cable
Sensor current	approx. 250 µA
Output circuits	
Current output	0/4…20 mA (load impedance ≤ 600 Ω)
Transfer characteristics	
Operating range	-50…+600 °C
Measuring range	4 measuring ranges (selectable via DIP-switches): T I = -50 ...+100 °C T II = 0 ...+200 °C T III = 0 ...+400 °C T IV = 0 ...+600 °C (other measuring ranges selectable ex factory)
Compensation error	≤ 0.1 % of measuring scale (ref. to -50...600 °C)
Load impedance	≤ 0.005 % of final value
Effect of load impedance	≤ 0.005 % of final value
Ambient temperature sensitivity	≤ 0.005 %/K of final value
Pulse rise time (10 %…90 %)	< 1 s
Release time (90 %…10 %)	< 1 s
LED indications	
– Power	green
– Fault indication	red
Housing	8-pole, 18 mm wide, Polycarbonate/ABS, flammability class V-0 per UL 94
Mounting	snap-on clamps for top-hat rail (DIN 50022) or srew terminals for panel mounting
Connection	via flat terminals with self-lifting pressure plates
Connection profile	≤ 2 x 2.5 mm^2 or 2 x 1.5 mm^2 with wire sleeves
Degree of protection (IEC 60529/EN 60529)	IP20
Operating temperature	-25…+60 °C

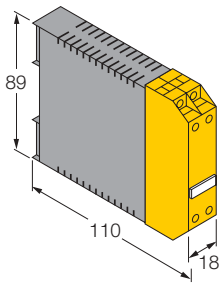

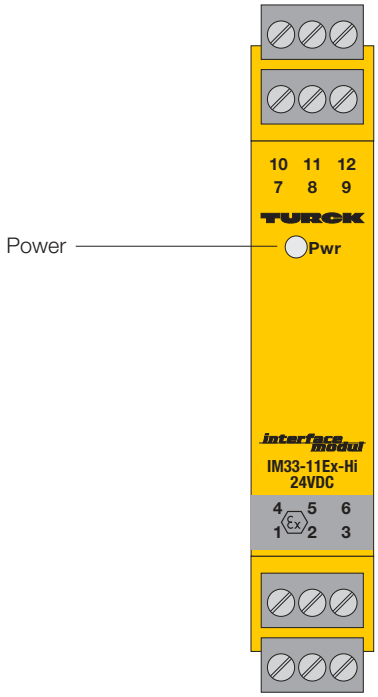

HART® Isolating Transducer IM33-11Ex-Hi/24VDC 1-channel

3

- **1-channel HART® isolating transducer with removable terminal blocks**
- **Intrinsically safe input circuit EEx ia**
- **Area of application according to ATEX: II (1) GD**
- **Supply of intelligent 2-wire transducers using the HART® communication protocol as well as connection to active 2-wire transmitters and to passive 3-wire transmitters**
- **Complete galvanic isolation**
- **Short-circuit protected transducer circuit**
- **Input circuit 0/4...20 mA**
- **Output circuit 0/4...20 mA**
- **Linearity tolerance ≤ 0.1 %**
- **Temperature coefficient ≤ 0.01 %/K of final value**
- **Constant voltage in transducer circuit**
- **EMC acc. to NE 21**

The isolating transducer IM33-11Ex-Hi/24VDC is used to energise intrinsically safe 2-wire HART® transducers in the hazardous area and to transmit the measuring signals to the non-hazardous area.

In addition to analogue signals, digital HART® communication signals can be transferred bidirectionally.

Further it is possible to connect active 2-wire (II) and passive 3-wire (I) transmitters. The device features one channel with 0/4...20 mA input and output circuits.

A green LED indicates operational readiness. A 24 VDC voltage supply is required for operation.

The input circuit is galvanically isolated from the output circuit, the supply voltage and from each other.

The input signal is transferred without attenuation (1:1 transfer) to the output circuit in the non-hazardous area.

Due to the 1:1 transmission characteristic, wire-break or short-circuit conditions in the transducer circuit are indicated by an output current of 0 mA or > 22.5 mA, respectively.

Further devices with other I.S. data are available on request.

The removable terminal blocks are equipped with test sockets (Ø 2 mm) for connection of a HART® handheld.

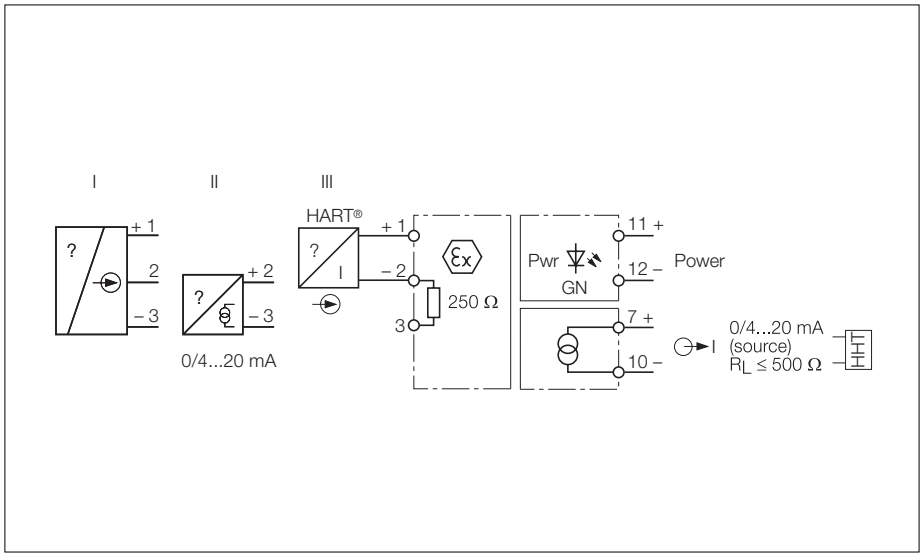

HART® Isolating Transducer IM33-11Ex-Hi/24VDC

Type	IM33-11Ex-Hi/24VDC
Ident-no.	7506440
Supply voltage U_B	19...29 VDC
Ripple W_{PP}	≤ 10 %
Galvanic isolation	between input circuit, output circuit and supply voltage for 250 V_{rms}, test voltage 2.5 kV_{rms}
Transducer circuit	intrinsically safe according to EN 50020
Input resistance	250 Ω
Operating characteristics	
– Voltage	17 V at 20 mA
– Current	0...22 mA
Short-circuit current (short-term)	60 mA (for 50 ms)
Output circuit	
Current output	0/4…20 mA
– Load impedance	≤ 500 Ω
– Wire-break indication	0 mA
– Short-circuit indication	> 22.5 mA
Ex-approval acc. to certificate of conformity	TÜV 00 ATEX 1595
Maximum values	
– No load voltage U_0	< 21.9 V
– Short-circuit current I_0	< 99.1 mA
– Internal resistance R_0	317 Ω
Maximum values of external input	
– Voltage U_I	≤ 40 V
– Power P_I	≤ 0.65 W
Max. external inductances/capacitances L_0/C_0	
– [EEx ia] IIB	5 mH/260 nF
– [EEx ia] IIC	0.36 mH/58 nF
Marking of devices	II (1) GD [EEX ia] IIC
Transfer characteristics	
Linearity tolerance (o.f.v. = of final value)	≤ 0.1 % o.f.v.
Measuring tolerance	≤ 0.2 %
Long term error	0.1 %/year
Load impedance	≤ 0.02 % o.f.v.
Input voltage effect	≤ 0.05 % o.f.v.
Temperature effect	≤ 0.01 %/K o.f.v.
Pulse rise time (10 %…90 %)	< 50 ms
Release time (90 %…10 %)	< 50 ms
LED indication	
– Power	green
Housing	12-pole, 18 mm wide, Polycarbonate/ABS flammability class V-0 per UL 94
Mounting	snap-on clamps for top-hat rail (DIN 50022) or srew terminals for panel mounting
Connection	removable terminal blocks, reverse-polarity protected, screw connection, test sockets Ø 2 mm
Connection profile	≤ 1 x 2.5 mm², 2 x 1.5 mm² or 2 x 1.0 mm² with wire sleeves
Degree of protection (IEC 60529/EN 60529)	IP20
Operating temperature	-25…+60 °C

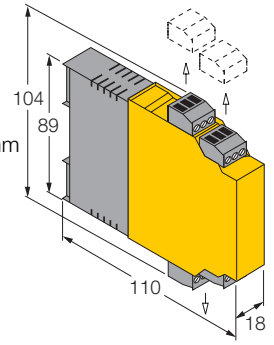

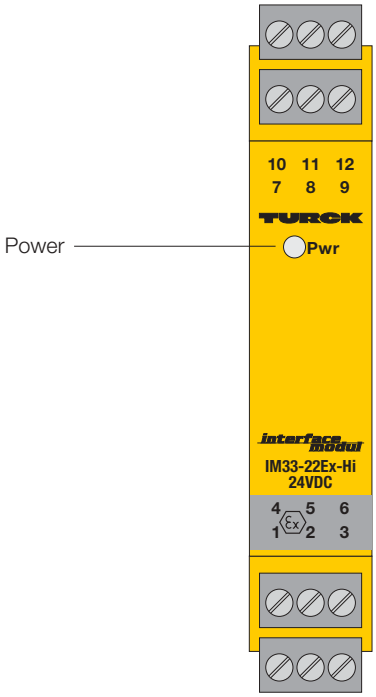

HART® Isolating Transducer IM33-22Ex-Hi/24VDC 2-channel

3

- **2-channel HART® isolating transducer with removable terminal blocks**
- **Intrinsically safe input circuits EEx ia**
- **Area of application according to ATEX: II (1) GD**
- **Supply of intelligent 2-wire transducers using the HART® communication protocol as well as connection to active 2-wire transmitters and to passive 3-wire transmitters**
- **Complete galvanic isolation**
- **Short-circuit protected transducer circuit**
- **Two input circuits 4...20 mA**
- **Two output circuits 4...20 mA**
- **Linearity tolerance ≤ 0.1 %**
- **Temperature coefficient ≤ 0.01 %/K of final value**
- **Constant voltage in transducer circuit**
- **EMC acc. to NE 21**

The isolating transducer IM33-22Ex-Hi/24VDC is used to energise intrinsically safe 2-wire HART® transducers in the hazardous area and to transmit the measuring signals to the non-hazardous area.

In addition to analogue signals, digital HART® communication signals can be transferred bidirectionally.

Further it is possible to connect active 2-wire (II) and passive 3-wire (I) transmitters. The device features two channels with 0/4...20 mA input and output circuits.

A green LED indicates operational readiness. A 24 VDC voltage supply is required for operation.

The input circuits are galvanically isolated from the output circuits, the supply voltage and from each other.

The input signals are transferred without attenuation (1:1 transfer) to the output circuits in the non-hazardous area.

Due to the 1:1 transmission characteristic, wire-break or short-circuit conditions in the transducer circuit are indicated by an output current of 0 mA or > 22.5 mA, respectively.

Further devices with other I.S. data are available on request.

The removable terminal blocks are equipped with test sockets (Ø 2 mm) for connection of a HART® handheld.

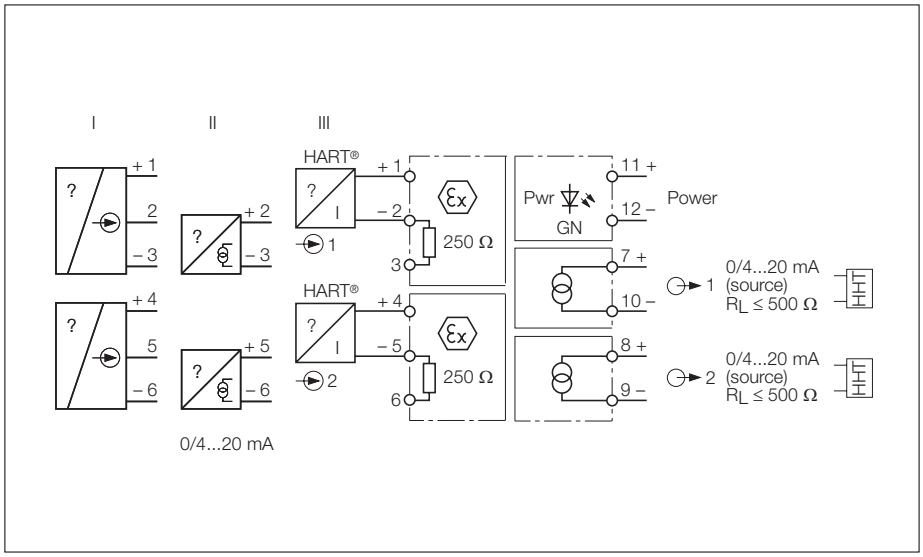

HART® Isolating Transducer IM33-22Ex-Hi/24VDC

Type	IM33-22Ex-Hi/24VDC
Ident-no.	7506441
Supply voltage U_B	19...29 VDC
Ripple W_{PP}	≤ 10 %
Galvanic isolation	between input circuit, output circuit and supply voltage for 250 V_{rms}, test voltage 2.5 kV_{rms}
Transducer circuits	intrinsically safe according to EN 50020
Input resistance	250 Ω
Operating characteristics	
– Voltage	17 V at 20 mA
– Current	0...22 mA
Short-circuit current (short-term)	60 mA (for 50 ms)
Output circuits	
Current output	0/4…20 mA
– Load impedance	≤ 500 Ω
– Wire-break indication	0 mA
– Short-circuit indication	> 22.5 mA
Ex-approval acc. to certificate of conformity	TÜV 00 ATEX 1595
Maximum values	
– No load voltage U_0	< 21.9 V
– Short-circuit current I_0	< 99.1 mA
– Internal resistance R_0	317 Ω
Maximum values of external input	
– Voltage U_I	≤ 40 V
– Power P_I	≤ 0.65 W
Max. external inductances/capacitances L_0/C_0	
– [EEx ia] IIB	5 mH/260 nF
– [EEx ia] IIC	0.36 mH/58 nF
Marking of devices	II (1) GD [EEX ia] IIC
Transfer characteristics	
Linearity tolerance (o.f.v. = of final value)	≤ 0.1 % o.f.v.
Measuring tolerance	≤ 0.2 %
Long term error	0.1 %/year
Load impedance	≤ 0.02 % o.f.v.
Input voltage effect	≤ 0.05 % o.f.v.
Temperature effect	≤ 0.01 %/K o.f.v.
Pulse rise time (10 %…90 %)	< 50 ms
Release time (90 %…10 %)	< 50 ms
LED indication	
– Power	green
Housing	12-pole, 18 mm wide, Polycarbonate/ABS flammability class V-0 per UL 94
Mounting	snap-on clamps for top-hat rail (DIN 50022) or srew terminals for panel mounting
Connection	removable terminal blocks, reverse-polarity protected, screw connection, test sockets Ø 2 mm
Connection profile	≤ 1 x 2.5 mm², 2 x 1.5 mm² or 2 x 1.0 mm² with wire sleeves
Degree of protection (IEC 60529/EN 60529)	IP20
Operating temperature	-25…+60 °C

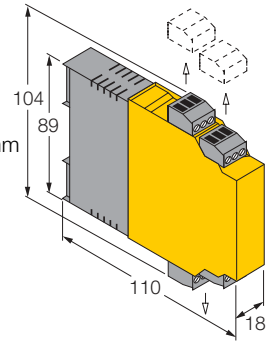

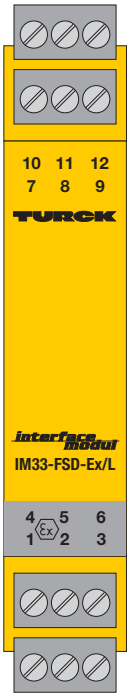

Isolating Transducer for Fire and Smoke Detectors IM33-FSD-Ex/L 2-channel

3

- **2-channel isolating transducer with removable terminal blocks**
- **Intrinsically safe input circuits EEx ia**
- **Area of application according to ATEX: II (1) GD**
- **Isolating transducer without auxiliary power**
- **For supply of fire and smoke alarm detectors**
- **Complete galvanic isolation**
- **Signal transfer 0...40 mA**

The 2-channel isolating transducer IM33-FSD-Ex/L is designed for connection of conventional fire and smoke alarm detectors.

The detectors are supplied with energy; actuation of the detector results in an according current signal which is transferred to the safe area. It is possible to connect several detectors to each circuit.

The isolating transducer operates without auxiliary power (loop-powered) and must be connected directly to the power-feeding inputs of processor devices. Unconditioned standard current signals of 0...40 mA are transferred. Please observe the voltage drop of the device.

The device features galvanic isolation between the input and output circuits. The inputs of the isolating transducer are reverse polarity protected.

An external earth-fault indicator can be used to indicate an earthing error securely.

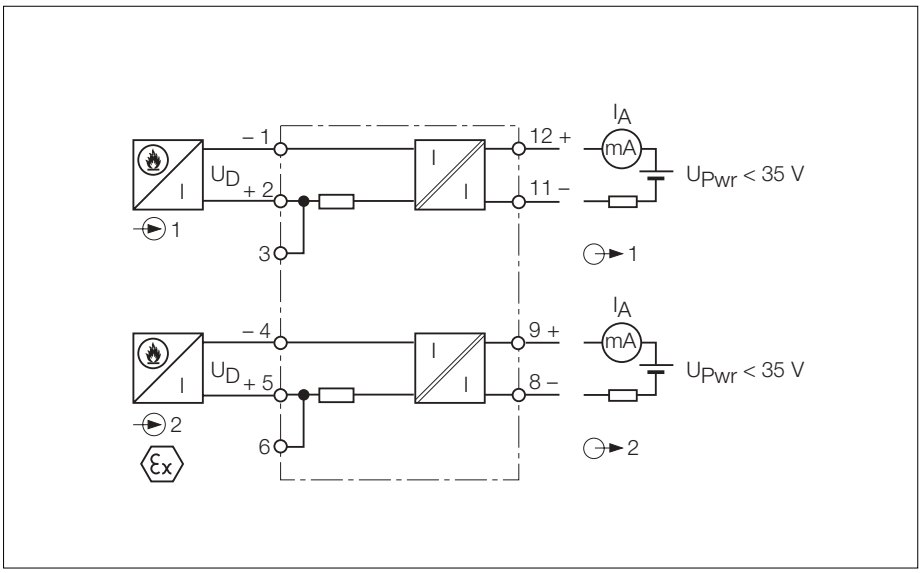

Isolating Transducer IM33-FSD-Ex/L

Type	IM33-FSD-Ex/L
Ident-no.	7506433
Galvanic isolation	between input circuit, output circuit and supply voltage for 250 V_{rms}, test voltage 2,5 kV_{rms}
Transducer circuit	
– Supply voltage	U_B – 1 V – 300 Ω * I_A
– Current	0...40 mA
– Short-circuit current	100 mA
– Input resistance	300 Ω
Output circuit	
– Voltage U_B	6...35 VDC
– Current I_A	0...40 mA
– Short-circuit current	100 mA
Ex-approvals acc. to certificate of conformity	TÜV 02 ATEX 1862
Maximum values	
– No load voltage U_0	27,3 V
– Short-circuit current I_0	90 mA
– Power P_0	615 mW
Max. external inductances/capacitances L_0/C_0	
– [EEx ia] IIB	5 mH/300 nF
– [EEx ia] IIC	1 mH/70 nF
Marking of devices	II (1) GD [EEx ia] IIC
Transfer characteristics	
Linearity tolerance (o. f. v. = of final value)	≤ 1 % o. f. v.
Measuring tolerance	≤ 2 %
Long term error	≤ 0,5 %/year
Temperature effect	≤ 0,1 %/K o. f. v.
Pulse rise time (10 %...90 %)	≤ 10 ms
Release time (90 %...10 %)	≤ 10 ms
Housing	12-pole, 18 mm wide, Polycarbonate/ABS flammability class V-0 per UL 94
Mounting	snap-on clamps for top-hat rail (DIN 50022) or screw terminals for panel mounting
Connection	removable terminal blocks, reverse-polarity protected, screw connection
Connection profile	≤ 1 x 2,5 mm^2 or 2 x 1,5 mm^2 or 2 x 1,0 mm^2 with wire sleeves
Degree of protection (IEC 60529/EN 60529)	IP20
Operating temperature	-25…+60 °C

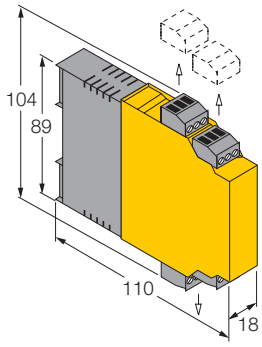

HART®– 2-Wire Loop Isolator MK33-11Ex-HLi

3

- **Loop isolator without auxiliary power**
- **Intrinsically safe input circuits**
- **Supply of intelligent 2-wire transducers using the HART® communication protocol**
- **Defined current limitation in the transducer circuit**
- **Input circuit monitoring for wire-break**
- **FSK bus connection** [1)]
- **Output circuit 0/4…20 mA**
- **Linearity error ≤ 0.1 %**
- **Temperature coefficient ≤ 0.1 %/10 K**
- **Additional power supply not necessary**

[1)] FSK = frequency shift keying

The single channel loop isolator MK33-11Ex-HLi is used to energise intelligent 2-wire transducers in the hazardous area and to transmit the 4...20 mA signal to the safe area. In addition to analogue signals, digital HART® communication signals can be transferred bidirectionally.

The loop isolator does not require auxiliary power and can be connected directly to the supply input circuits of control systems.

The input circuit is securely isolated from the output circuit.

The analogue input signals are transferred without attenuation (1:1 transfer) to the output circuit in the non-hazardous area.

The loop isolator is connected via terminals 1/4. Handheld terminals (HHT) can be connected to input terminals 1/4, output terminals 8/9, or to the FSK bus terminals 7/10.

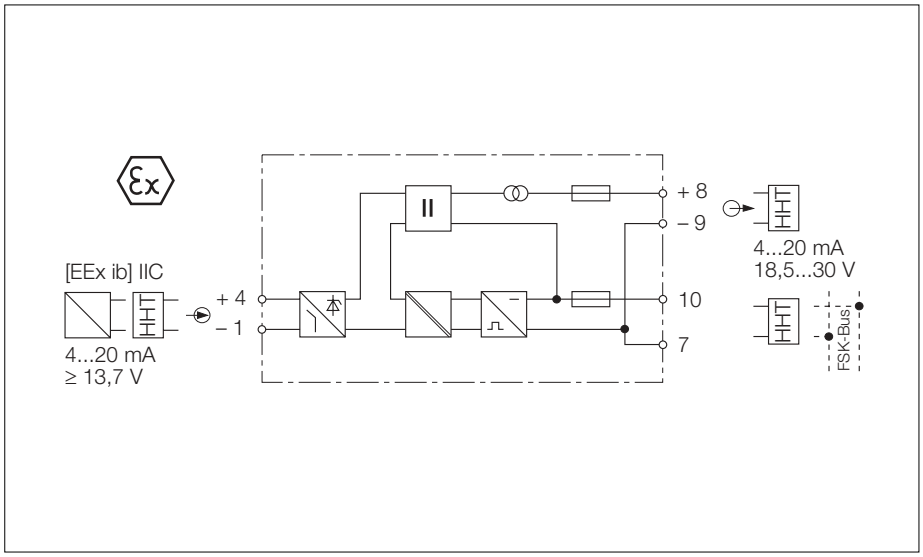

2-wire Loop Isolator MK33-11Ex-HLi

Type	MK33-11Ex-HLi
Ident-No.	7506410
Supply voltage U_B	20...30 VDC
Ripple W_{PP}	≤ 10 %
Input current	4...20 mA
Voltage drop	< 7.2 V
Galvanic isolation	between input circuit, output circuit for 250 V_{rms}, test voltage 2.3 kV_{rms}
Transducer circuits	intrinsically safe according to EN 50020
Input resistance	
Operating characteristics	
– Voltage	12.8...14 V
– Current	4...20 mA
– Overload trip-point	> 23.6 mA
– Short-circuit current	23...30 mA
Output circuits	
Current output terminals 8/9	0/4…20 mA
Wire-break performance	< 400 µA
– Load impedance 8/9	≤ 75 Ω
FSK-interface terminals 7/10	0...30 VDC
Ex-approvals acc. to certificate of conformity	pending
Input circuit	
– No load voltage U_0	–
– Short-circuit current I_0	–
– Power P_0	–
Internal inductances/capacitances	–
Max. external inductances/capacitances L_0/C_0	
– [EEx ib] IIB	–
– [EEx ib] IIC	–
Transfer characteristics	
Linearity tolerance	≤ 0.1 % of final value
Measuring tolerance	≤ 0.25 %
Load impedance	≤ 0.05 %
Effect of load impedance	≤ 0 % of final value
Ambient temperature sensitivity	≤ 0.1 %/10 K (at <-10 °C 0.25 %/10 K)
Pulse rise time (10 %…90 %)	< 50 ms
Release time (90 %…10 %)	< 50 ms
Housing	12-pole, 27 mm wide, Polycarbonate/ABS flammability class V-0 per UL 94
Mounting	snap-on clamps for top-hat rail (DIN 50022) or srew terminals for panel mounting
Connection	via flat terminals with self-lifting pressure plates
Connection profile	≤ 2 x 2.5 mm^2 or 2 x 1.5 mm^2 with wire sleeves
Degree of protection (IEC 60529/EN 60529)	IP20
Operating temperature	-25…+60 °C

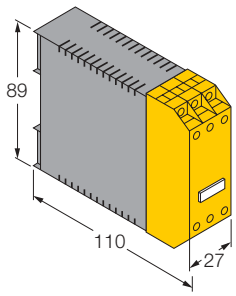

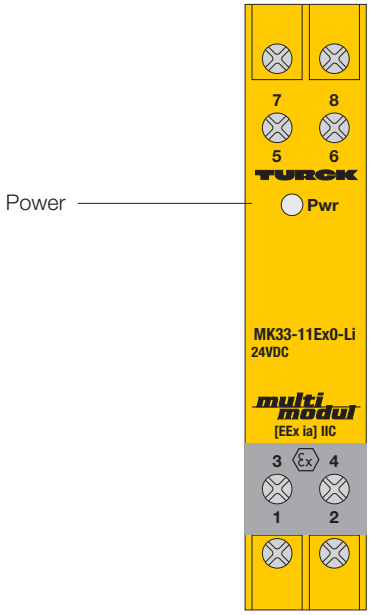

2-wire Loop Isolator MK33-11Ex0-Li/24VDC 1-channel

3

- **1-channel loop isolator**
- **Intrinsically-safe input circuit EEx ia**
- **Area of application according to ATEX: II (1) GD**
- **Input circuit 0/4…20 mA**
- **Supply of 2-wire loop powered transducers**
- **Galvanic isolation between input circuit, output circuit and supply voltage**
- **Defined current limitation in the transducer circuit**
- **Output circuit 0/4…20 mA**
- **Linearity ≤ 0.1 %**
- **Temperature drift ≤ 0,01 %/K of final value**
- **Constant transducer voltage**

The single channel MK33-11Li-Ex0... loop isolators are used to operate intrinsically safe 2-wire loop powered transducers in explosion hazardous area and to transfer signals to the safe area.

The MK33-11Li-Ex0... types are single channel device with an input and output circuit of 0/4...20 mA. A green LED indicates that the device is powered.

The input circuit is isolated from the output circuit and from the supply voltage. Input signals are passed (1:1) without attenuation to the output located in the non-hazardous area.

Due to this function it is possible to connect this device to power supplying input circuits of a PLC and to install it in such applications which previously used Zener barriers.

Due to the 1:1 transmission characteristic of the loop powered transducer circuit, wire-break or short-circuit faults are shown as 0 mA or > 22 mA respectively.

For applications with HART® transducers, there are loop-isolaters available which not only transmit analogue signals but also transfer digital signals bidirectionally:

– IM33-11Ex-Hi/24VDC (page 3 – 25)
– IM33-22Ex-Hi/24VDC (page 3 – 27)

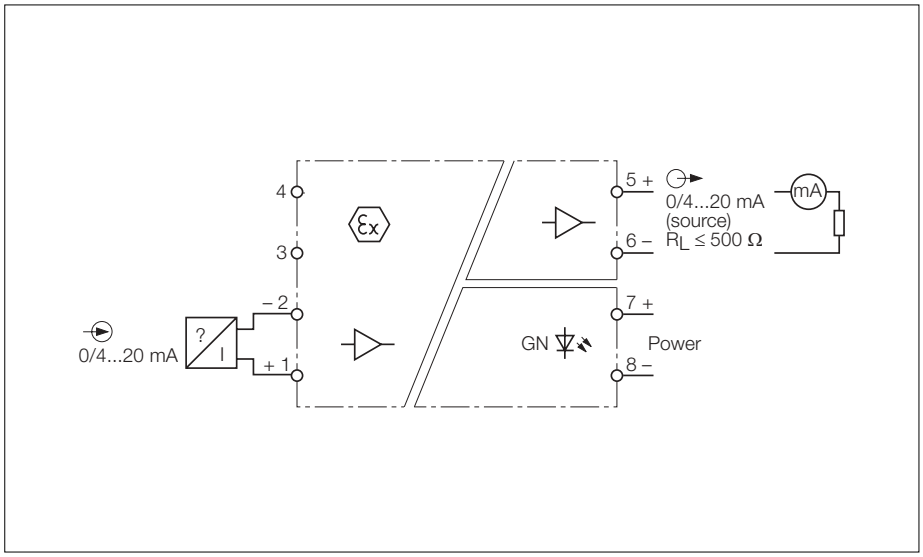

2-wire Loop Isolator MK33-11Ex0-Li

Type	MK33-11Ex0-Li/24VDC
Ident-No.	7506402
Supply voltage U_B	19...29 VDC
Ripple W_{PP}	≤ 10 %
Current consumption	≤ 80 mA
Galvanic isolation	between input circuit, output circuit and supply voltage for 250 V_{rms} test voltage 4 kV_{rms}
Transducer circuits	intrinsically safe according to EN 50020
Input resistance	50 Ω
Operating characteristics	
– Voltage	15.2 V constant voltage (± 2 % at 20 mA)
– Current	0/4...20 mA
– Short-circuit current	24 mA
Output circuits	active, current source mode
Current output	0/4…20 mA
– Load impedance	≤ 500 Ω
– Output current with wire break	0 mA
– Output current with short-circuit	> 22 mA
Ex-approvals acc. to certificate of conformity	TÜV 03 ATEX 2312
Input circuit	
Maximum values	
– No load voltage U_0	≤ 20 V
– Short-circuit current I_0	≤ 80 mA
– Internal impedance R_i	391 Ω
– Power P_{max}	≤ 581 mW
– Characteristic	trapezoidal curve
Max. external inductances/capacitances L_0/C_0	
– [EEx ia] IIC	1 mH/85 nF (alternatively 0.5 mH/110 nF)
– [EEx ia] IIB	5 mH/680 nF (alternatively 0.5 mH/830 nF)
Temperature range T_u	-25...+60 °C
Marking of the device	II (1) GD [EEx ia] IIC
Transfer characteristics	
Linearity tolerance of setpoint adjustment	≤ 0.1 % of final value
Measuring tolerance	≤ 0.2 %
Long term error	≤ 0.05 %/year
Load impedance	≤ 0.02 % of final value
Effect of load impedance	≤ 0.05 % of final value
Ambient temperature sensitivity	≤ 0.01 %/of final value
Pulse rise time (10 %…90%)	< 90 ms
Release time (90 %…10 %)	< 90 ms
LED indications	
– Power	green
Housing	8-pole, 18 mm wide, Polycarbonate/ABS flammability class V-0 per UL 94
Mounting	snap-on clamps for top-hat rail (DIN 5002 or screw terminals for panel mounting
Conection	via flat terminals with self-lifting pressure plates
Connection profile	≤ 2 x 2.5 mm^2 or 2 x 1.5 mm^2 with wire sleeves
Degree of protection (IEC 60529/EN 60529)	IP20
Operating temperature	-25…+70 °C

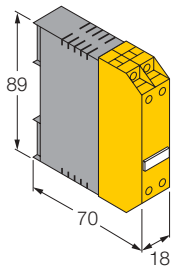

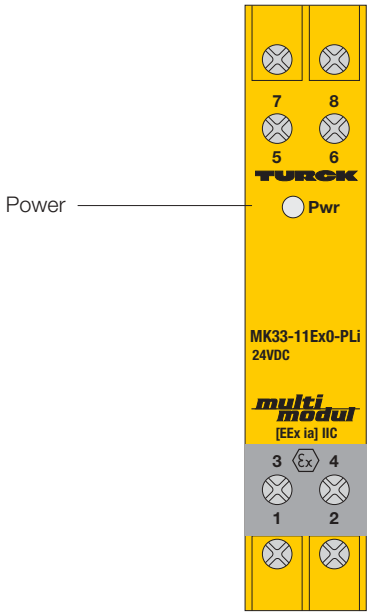

2-wire Loop Isolator MK33-11Ex0-PLi/24VDC 1-channel

3

- **1-channel loop isolator**
- **Intrinsically safe input circuit EEx ia**
- **Area of application according to ATEX: II (1) GD**
- **Supply of 2-wire loop powered transducers**
- **Complete galvanic isolation**
- **Defined current limitation in the transducer circuit**
- **Input circuit 0/4…20 mA**
- **Passive output circuit 0/4…20 mA**
- **Linearity ≤ 0.1 %**
- **Temperature drift ≤ 0.01 %/K of final value**
- **Constant transducer voltage**

The single channel MK33-11Ex0-PLi/... loop isolators are used to operate intrinsically safe 2-wire loop powered transducers in explosion hazardous area and to transfer signals to the safe area.

The MK33-11Li-Ex0-PLi... types are single channel device with an input and output circuit of 0/4...20 mA. A green LED indicates that the device is powered.

The input circuit is isolated from the output circuit and from the supply voltage. Input signals are passed (1:1) without attenuation to the output located in the non-hazardous area.

Due to this function it is possible to connect this device to power supplying input circuits of a PLC and to install it in such applications which previously used Zener barriers.

Due to the 1:1 transmission characteristic of the loop powered transducer circuit, wire-break or short-circuit faults are shown as 0 mA or > 22 mA respectively.

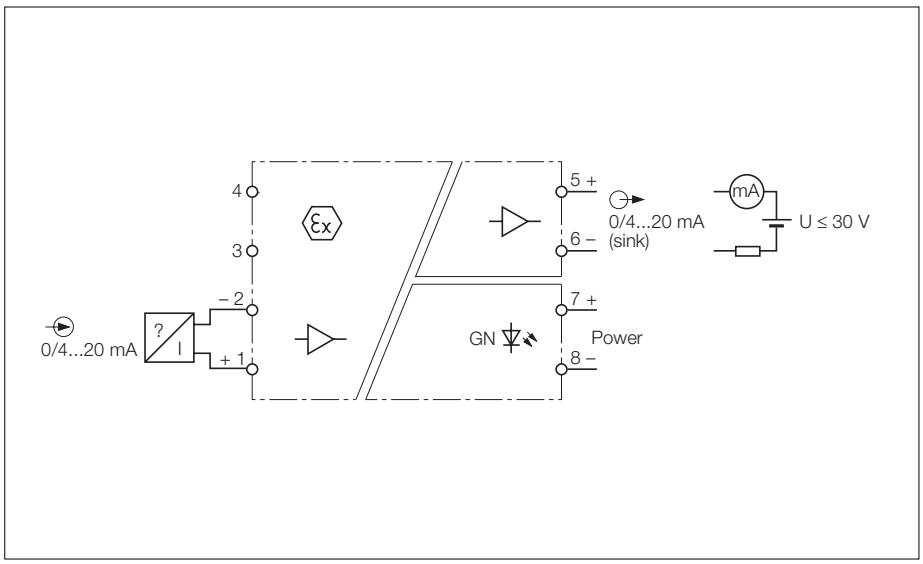

2-wire Loop Isolator MK33-11Ex0-PLi

Type	MK33-11Ex0-PLi/24VDC
Ident-No•r.	7506436
Supply voltage U_B	19...29 VDC
Ripple W_{PP}	≤ 10 %
Current consumption	≤ 80 mA
Galvanic isolation	between input circuit, output circuit and supply voltage for 250 V_{rms} test voltage 4 kV_{rms}
Transducer circuits	intrinsically safe according to EN 50020
Input resistance	50 Ω
Operating characteristics	
– Voltage	15.2 V constant voltage (± 2 % at 20 mA)
– Current	0/4...20 mA
– Short-circuit current	24 mA
Output circuits	
Current output	0/4…20 mA
– Load impedance	≤ 500 Ω
– Output voltage	≤ 30 VDC
Ex-approvals acc. to certificate of conformity	TÜV 03 ATEX 2312
Input circuit	
Maximum values	
– No load voltage U_0	≤ 20 V
– Short-circuit current I_0	≤ 80 mA
– Internal impedance R_i	391 Ω
– Power P_{max}	≤ 581 mW
– Characteristic	trapezoidal curve
Max. external inductances/capacitances L_0/C_0	
– [EEx ia] IIC	1 mH/85 nF (alternatively 0.5 mH/110 nF)
– [EEx ia] IIB	5 mH/680 nF (alternatively 0.5 mH/830 nF)
Temperature range T_u	-25...+60 °C
Marking of the device	II (1) GD [EEx ia] IIC
Transfer characteristics	
Linearity tolerance of setpoint adjustment	≤ 0.1 % of final value
Measuring tolerance	≤ 0.2 %
Long term error	≤ 0.05 %/year
Load impedance	≤ 0.02 % of final value
Effect of load impedance	≤ 0.05 % of final value
Ambient temperature sensitivity	≤ 0.01 %/of final value
Pulse rise time (10 %…90%)	< 90 ms
Release time (90 %…10 %)	< 90 ms
LED indications	
– Power	green
Housing	8-pole, 18 mm wide, Polycarbonate/ABS flammability class V-0 per UL 94
Mounting	snap-on clamps for top-hat rail (DIN 5002 or screw terminals for panel mounting
Conection	via flat terminals with self-lifting pressure plates
Connection profile	≤ 2 x 2.5 mm^2 or 2 x 1.5 mm^2 with wire sleeves
Degree of protection (IEC 60529/EN 60529)	IP20
Operating temperature	-25…+70 °C

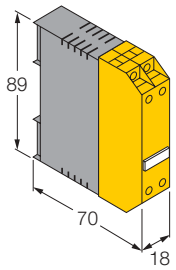

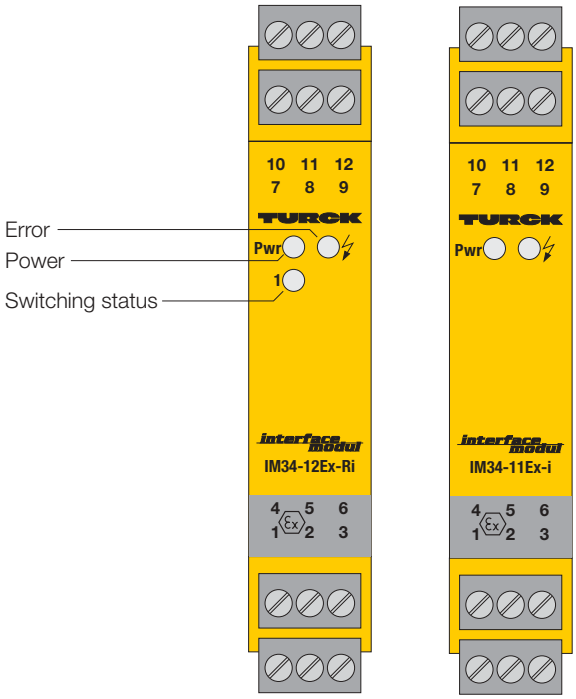

Temperature Measuring Amplifier IM34-11Ex-i IM34-12Ex-Ri 1-channel

3

- **1-channel temperature measuring amplifier with removable terminal blocks**
- **Intrinsically safe input circuit EEx ia with wire-break monitoring function**
- **Area of application according to ATEX: II (1) GD**
- **Input for Ni100/Pt100 resistance temperature detectors, thermoelements and millivolt signals**
- **Lower and upper measuring range value adjustable via coded rotary switches**
- **Current output 0/4…20 mA**
- **Limit value relay (IM34-12Ex-Ri only)**
- **Complete galvanic isolation**
- **Adjustable analogue output performance in case of errors in the input circuit**
- **Universal supply voltage (20...250 VAC/20...125 VDC)**

The single-channel temperature measuring amplifier IM34-1.Ex-... is designed to evaluate the temperature-dependent variations of Ni100/Pt100 resistance temperature detectors, thermoelement types B, E, J, K, L, N, R, S and T or low voltages in a range of -160...+160 mV and to reproduce these values as temperature-linear current signals of 0/4…20 mA. The IM34-12Ex-Ri is equipped with an additional relay output to monitor a limit value for under- and overrrange conditions.
The input circuit of the measuring amplifier is also suited for connection of 2, 3 or 4-wire Ni100/Pt100 resistors. The Ni100/Pt100 input may be used for external cold junction compensation for the thermoelements (2-wire types) or as an independent measuring input.

The measuring range and the device functions are set via coded rotary switches or slide switches (on the right side of the device).

Version IM34-12Ex-Ri enables adjustment of a limt value via the coded rotary switch.

The following parameters may be set:
- type of measuring device
- connection of the Ni100/Pt100 resistance temperature detector in 2, 3 and 4-wire technology
- lower measuring range value -100...- 1°C in increments of 1 K 0...990 °C in increments of 10 K
- upper measuring range value 0...1990 °C in increments of 10 K
- limit value (IM34-12Ex-Ri only)
- input circuit monitoring for wire-break
- current output performance in case of errors in the input circuit: 0 or > 22 mA
- internal or external cold junction compensation

The signals are transformed according to ITS90 IEC 584 for thermoelements and IEC 751 for PT100 RTDs and provided as temperature-linear signals at the current output.

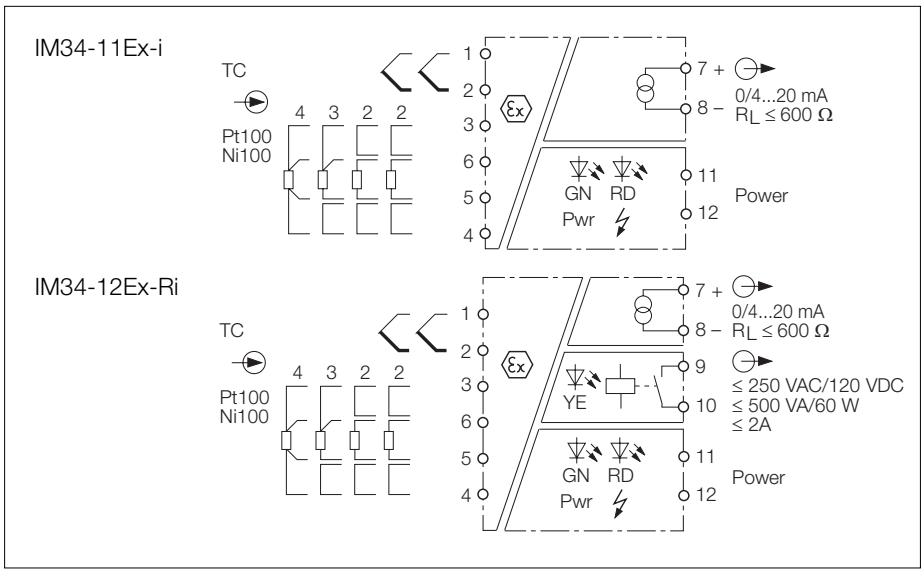

Temperature Measuring Amplifier IM34-11Ex-i/IM34-12Ex-Ri

Type	IM34-11Ex-i	IM34-12Ex-Ri
Ident.-no.	7506630	7506631
Supply voltage U_B	20...250 VAC/20...125 VDC	
Line frequency (AC)	40...70 Hz	
Power consumption	≤ 3 W	
Galvanic isolation	between input and output circuit and supply voltage for 250 V_{rms}, test voltage 2.5 kV_{rms}	
Input circuit	intrinsically safe according to EN 50020 version Ni100 and Pt100 (IEC 751), 2, 3 and 4-wire technology measuring range -200...800 K (Pt100), -60...250 K (Ni100) thermoelements B, E, J, K, N, R, S, T (ITS 90/IEC 584), L (DIN 43710) extra-low voltages with a measuring span of -160 mV...+160 mV	
Resistor current Pt100/Ni100	approx. 200 µA	
Output circuits		
Current output	0/4…20 mA (load ≤ 600 Ω)	0/4…20 mA (load ≤ 600 Ω)
Relay output	–	1 normally open contact
– Switching voltage	–	≤ 250 VAC/120 VDC
– Switching current	–	≤ 2 A
– Switching capacity	–	≤ 500 VA/60 W
– Switching frequency	–	≤ 10 Hz
– Switching hysteresis	–	≤ 5 K
– Contact materials:	–	Ag alloy + 3 µm Au
Ex-approvals acc. to certificate of conformity	TÜV 02 ATEX 1898	TÜV 02 ATEX 1898
Input circuit		
– Max. values		
No-load voltage U_0	5 V	5 V
Short-circuit current I_0	2 mA	2 mA
Power P_0	2.6 mW	2.6 mW
Internal inductances/capacitances L_i/C_i	0.2 mH/–	0.2 mH/–
Max. external inductances/capacitances L_0/C_0		
– [EEx ia] IIC	1000 mH/100 µF	1000 mH/100 µF
– [EEx ia] IIB	1000 mH/1000 µF	1000 mH/1000 µF
Marking of the Device	II (1) GD [EEx ia] IIC	II (1) GD [EEx ia] IIC
Transfer characteristics		
Accuracy	see page 3 – 39	
Total error	see from pages 3 – 40 on	
Rise time (10 %…90 %)	< 1 s	
Release time (90 %…10 %)	< 1 s	
Response time	< 1 s	
LED indications		
– Power	green	green
– Error	red	red
– Switching status	–	yellow
Housing	12 poles, 18 mm wide, Polycarbonatet/ABS, flammability class V-0 per UL94	
Mounting	snap-on hat rail (DIN 50022) or panel screw mounting	
Connection	removable terminal blocks, polarity protected screw connection, self-lifting	
Connection profile	≤ 1 x 2.5 mm², 2 x 1.5 mm² or 2 x 1.0 mm² with wire sleeves	
Degree of protection (IEC 60529/EN 60529)	IP20	
Operating temperature	-25…+70 °C	

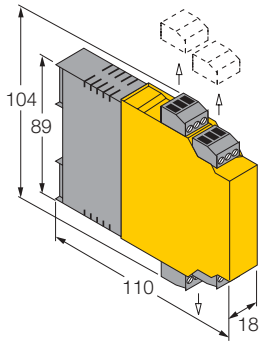

Accuracy Ratings

Accuracy – extra-low voltage input

Basic accuracy:
α = 10 µV =>
31.25 ppm of measuring span/K (320 mV)

Temperature coefficient:
β = 1 µV/K =>
3.13 ppm of measuring span (320 mV)

Long-term stability
χ = 1 µV/p. a. =>
3.13 ppm of measuring span (320 mV)

$\Delta_{mV} = \pm (\alpha + \beta \cdot |T_U - 25\ °C| + \chi \cdot age)$

For example: Assumption: T_U = 50 °C, age = 5 years

$\Delta_{mV} = \pm (10\ \mu V + 1\ \mu V/K \cdot |50\ °C - 25\ °C| + 1\ \mu V/years \cdot 5\ years = \pm 40\ \mu V$

Accuracy – RTD input

Basic accuracy:
α = 50 mΩ =>
25 ppm of measuring span (2000 Ω)

Temperature coefficient:
β = 0.75 mΩ/K
0.38 ppm of measuring span (2000 Ω)

Long-term stability
=> χ = 1 mΩ/p. a. =>
0.5 ppm of measuring span (2000 Ω)

$\Delta_{RTD} = \pm (\alpha + \beta \cdot |T_U - 25\ °C| + \chi \cdot age)$

For example: Assumption: T_U = 35 °C, age = 1 year

$\Delta_{RTD} = \pm (50\ m\Omega + 0{,}75\ m\Omega/K \cdot |35\ °C - 25\ °C| + 1\ m\Omega/year \cdot 1\ year = \pm 58.5\ m\Omega$

Accuracy – thermoelement input with internal cold junction compensation

$\Delta_{KSI} = \pm\ 1.5\ K$

Accuracy – current output

Basic accuracy:
α = 5 µA =>
250 ppm of measuring span (20 mA)

Temperature coefficient:
β = 0.5 µA/K =>
25 ppm of final value (20 mA)

Long-term stability
χ = 1 µA/p. a. =>
50 ppm of final value (20 mA)

$\Delta_I = \pm (\alpha + \beta \cdot |T_U - 25\ °C| + \chi \cdot age)$

For example: Assumption: T_U = 25 °C, age = 1 year

$\Delta_I = \pm (5\ \mu A + 0.5\ \mu A/K \cdot |25\ °C - 25\ °C| + 1\ \mu A/year \cdot 1\ year = \pm 6\ \mu A$

Temperature measuring amplifier IM34-11-Ex-i/IM34-12-Ex-Ri

Total Error – Extra-low Voltage Input and RTD Input

Total error – extra-low voltage input

Output: 0...20 mA

$$\Delta_G = \pm \left(\frac{|\Delta_I|}{\frac{20\ \text{mA}}{|\text{MBA - MBE}|}} + |\Delta_{mV}| \right)$$

Output: 4...20 mA

$$\Delta_G = \pm \left(\frac{|\Delta_I|}{\frac{16\ \text{mA}}{|\text{MBA - MBE}|}} + |\Delta_{mV}| \right)$$

For example: Assumption: T_U = 40 °C, age = 2 years, output: 4...20 mA, MBA = 0 mV, MBE = 100 mV

1) Accuracy calculation - extra-low voltage input (s. page 3 – 39) => Δ_{mV} = ± 27 µV

2) Accuracy calculation - current output (s. page 3 – 39) => Δ_I = ± 14.5 µA

3) Total error calculation - extra-low voltage input

$$\Delta_G = \pm \left(\frac{|14.5\ \mu\text{A}|}{\frac{16\ \text{mA}}{|0 - 100\ \text{mV}|}} + |27\ \mu\text{V}| \right) = \pm\ 117\ \mu\text{V}$$

Total error – RTD input (4-wire operation)

Output: 0...20 mA

$$\Delta_G = \pm \left(\frac{|\Delta_I|}{\frac{20\ \text{mA}}{|\text{MBA - MBE}|}} + |\Delta_{Td}| \right)$$

Output: 4...20 mA

$$\Delta_G = \pm \left(\frac{|\Delta_I|}{\frac{16\ \text{mA}}{|\text{MBA - MBE}|}} + |\Delta_{Td}| \right)$$

Digital temperature Td:
The digital temperature is the digitised value of the analogue sensor value of the Pt100/Ni100. The block diagram illustrates the measuring operation:

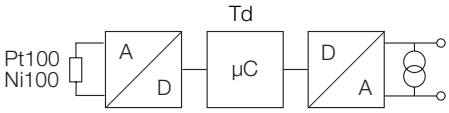

$\Delta_{Td} \leq \Delta_{RTD} / \alpha_T$		
	Sensitivity α_{Tmin} (see note)	For example: Δ_{RTD} = ± 50 mΩ
Type	α_{Tmin}	Δ_{Tdmax}
Pt100	300 mΩ/K	± 0.16 K
Ni100	470 mΩ/K	± 0.1 K

Please note:
The sensitivity rating $\boldsymbol{\alpha}_{Tmin}$ is a „worst-case“ assessment and is generally better. The maximum digital temperature Td of a faulty Pt100/Ni100 RTD can be calculated as follows:

For example: Assumption: Probe: Pt100, T_U = 40 °C, MBA = 0 °C, MBE = 100 °C, age = 10 years, output: 0...20 mA

1) Accuracy calculation - RTD input (s. page 3 – 39) => Δ_{RTD} = ± 71.25 mΩ

2) Accuracy calculation - current output (s. page 3 – 39) => Δ_I = ± 22.5 µA

3) Total error calculation – RTD input

$$\Delta_G = \pm \left(\frac{|22.5\ \mu\text{A}|}{\frac{20\ \text{mA}}{|0 - 100\ °\text{C}|}} + |0.24\text{K}| \right) = \pm\ 0.35\ \text{K}$$

MBA = lower measuring range value
MBE = upper measuring range value

Total Error – Thermoelement Input with External Cold Junction Compensation

Total error – thermoelement input

Output: 0...20 mA

$$\Delta_G = \pm \left(\frac{|\Delta_I|}{\frac{20\ \text{mA}}{|\text{MBA} - \text{MBE}|}} + |\Delta_{Td}| \right)$$

Output: 4...20 mA

$$\Delta_G = \pm \left(\frac{|\Delta_I|}{\frac{16\ \text{mA}}{|\text{MBA} - \text{MBE}|}} + |\Delta_{Td}| \right)$$

Please note:
The sensitivity rating α_{Tmin} is a „worst-case“ assessment and is generally better. The maximum digital temperature Td of a faulty thermovoltage can be calculated as follows: when using, e.g., type B, the sensitivity rises from 4 µV/K at 400 °C up to 12 µV/K at 1600 °C. At 50 µV and 400 °C the error is 12.5 K and at 1600 °C it drops to 4 K. Thus it becomes clear that type B is better suited for higher temperatures.

Digital temperature Td:
The digital temperature is the digitised value of the analogue sensor value of the thermoelement. The block diagram illustrates the measuring operation:

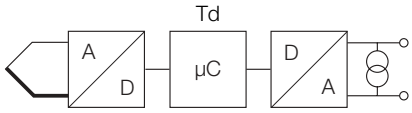

External cold junction point compensation: $\Delta_{Td} = \Delta_{mV} / \alpha_{Tmin} + \Delta_{TdCJC}$ [1] Internal cold junction point compensation: $\Delta_{Td} = \Delta_{mV} / \alpha_{Tmin} + \Delta_{KSI}$ ($\Delta_{KSI} = \pm 1.5$ K)		
	Sensitivity α_{Tmin} (see note)	Example: $\Delta_{mV} = \pm 10$ µV
Type	α_{Tmin}	$\Delta_{TdThermo}$
J	41 µV/K	± 0.24 K
B	4.0 µV/K	± 2.50 K
E	45 µV/K	± 0.22 K
K	30 µV/K	± 0.33 K
L	39 µV/K	± 0.25 K
N	21 µV/K	± 0.47 K
R	3.7 µV/K	± 2.70 K
S	3.9 µV/K	± 2.56 K
T	28 µV/K	± 0.36 K

Example for external cold junction compensation CJC: Assumption:
Thermoelement type T, external cold junction compensation via Ni100 (2-wire operation), MBA = 500 °C, MBE = 1000 °C, T_U = 60 °C, age = 3 years, output: 0...20 mA

1) Accuracy calculation - extra-low voltage input (s. page 3 – 39) => $\Delta_{mV} = \pm 48$ µV

2) Accuracy calculation - RTD input (s. page 3 – 39) => $\Delta_{RTD} = \pm 79$ mΩ
(in case of 2-wire operation multiply by 2 => $\Delta_{RTD} = \pm 158.5$ mΩ

3) Δ_{TdCJC} = 158.5 mΩ/300 mΩ/K = 0.52 K

4) $\Delta_{TdThermo}$ = 48 µV/28 µV/K = 1.7 K

5) $\Delta_{Td} = \Delta_{TdCJC} + \Delta_{TdThermo}$ = 2.23 K

6) Accuracy calculation - current output (s. page 3 – 39) => $\Delta_I = \pm 25.5$ µA

7) Total error calculation – thermoelement input

$$\Delta_G = \pm \left(\frac{|25.5\ \mu\text{A}|}{\frac{20\ \text{mA}}{|550\ °\text{C} - 1000\ °\text{C}|}} + |2.23\ \text{K}| \right) = \pm 2.87\ \text{K}$$

[1] In case of external cold junction compensation via RTD the digital t emperature also has to be considered.

3

Temperature Measuring Amplifier IM34-11-Ex-i/IM34-12-Ex-Ri

Total Error – Thermoelement Input with Internal Cold Junction Compensation

Total error – thermoelement input

Output: 0...20 mA

$$\Delta_G = \pm \left(\frac{|\Delta_I|}{\frac{20\ \text{mA}}{|\text{MBA - MBE}|}} + |\Delta_{Td}| \right)$$

Output: 4...20 mA

$$\Delta_G = \pm \left(\frac{|\Delta_I|}{\frac{16\ \text{mA}}{|\text{MBA - MBE}|}} + |\Delta_{Td}| \right)$$

Example for internal cold junction compensation:
Assumption: Thermoelement type J, internal cold junction compensation via Ni100, MBA = 400 °C, MBE = 800 °C,
T_U = 40 °C, age = 5 years, output: 4...20 mA

1) Accuracy calculation - extra-low voltage input (s. page 3 – 39) => $\Delta_{mV} = \pm$ 30 µV

2) Δ_{Td} = 30 µV/41µV/K + 1.5 K = 2.23 K

3) Accuracy calculation - current output (s. page 3 – 39) => $\Delta_I = \pm$ 17.5 µA

4) Total error calculation – thermoelement input

$$\Delta_G = \pm \left(\frac{|17.5\ \mu\text{A}|}{\frac{16\ \text{mA}}{|400\ °\text{C} - 800\ °\text{C}|}} + |2.23\ \text{K}| \right) = \pm 2.66\ \text{K}$$

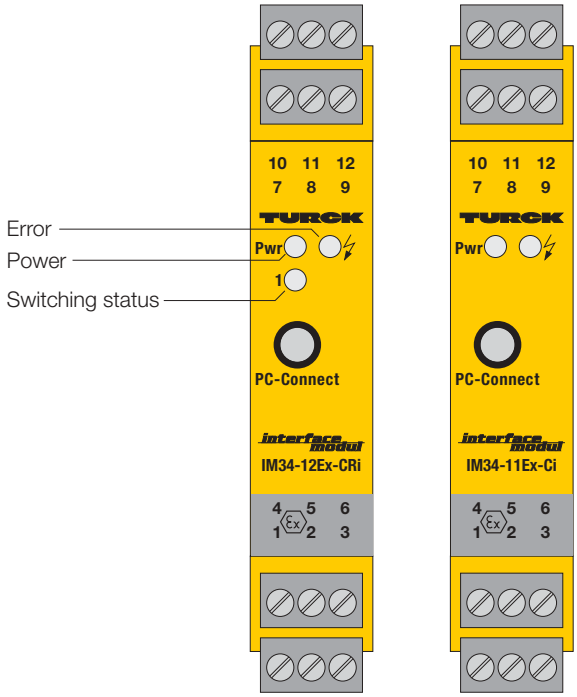

Temperature Measuring Amplifier IM34-11Ex-Ci IM34-12Ex-CRi 1-channel

- **1-channel temperature measuring amplifier with removable terminal blocks**
- **Intrinsically safe input circuit EEx ia with wire-break monitoring function**
- **Area of application according to ATEX: II (1) GD**
- **Input for Ni100/Pt100 resistance temperature detectors, thermoelements and millivolt signals**
- **Parameterisation and configuration with the software tool "Device Type Manager" (DTM) via personal computer**
- **Current output 0/4…20 mA**
- **Limit value relay (IM34-12Ex-CRi only)**
- **Complete galvanic isolation**
- **Adjustable analogue output performance in case of errors in the input circuit**
- **Universal supply voltage (20...250 VAC/20...125 VDC)**

The single-channel temperature measuring amplifier IM34-1.Ex-... is designed to evaluate the temperature-dependent variations of Ni100/Pt100 resistance temperature detectors, thermoelement types B, E, J, K, L, N, R, S and T or low voltages in a range of -160...+160 mV and to reproduce these values as temperature-linear current signals of 0/4…20 mA.

The type IM34-12Ex-CRi is equipped with an additional relay output to monitor a limit value for under- and overrrange conditions. The input circuit of the measuring amplifiers is also suited for connection of 2, 3 or 4-wire Ni100/Pt100 resistors. The Ni100/Pt100 input may be used for external cold junction compensation for the thermoelements (2-wire types) or as an independent measuring input.

The software tool "Device Type Manager - DTM" is needed to configure and parameterise the devices via PC. For this, the temperature measuring amplifier is connected to the PC via the 3.5 mm front panel jack. The premoulded transmission cable can be ordered with TURCK under the type name IM-PROG (ident.-no. 6890422).

The following settings can be made via the DTM:
- connection mode (2, 3 or 4-wire)
- lower measuring range value
- upper measuring range value
- limit value (IM34-12Ex-CRi only)
- input circuit monitoring for wire-break
- current output performance in case of errors in the inputcircuit: 0 or > 22 mA
- internal or external cold junction compensation
- output current (0/4...20 mA)
- unit of temperature (°C or °K)
- mode (RTD, thermoelement, low voltage, line compensation)

The signals are transformed according to ITS90 IEC 584 for thermoelements and IEC 751 for PT100 RTDs and provided as temperature-linear signals at the current output.

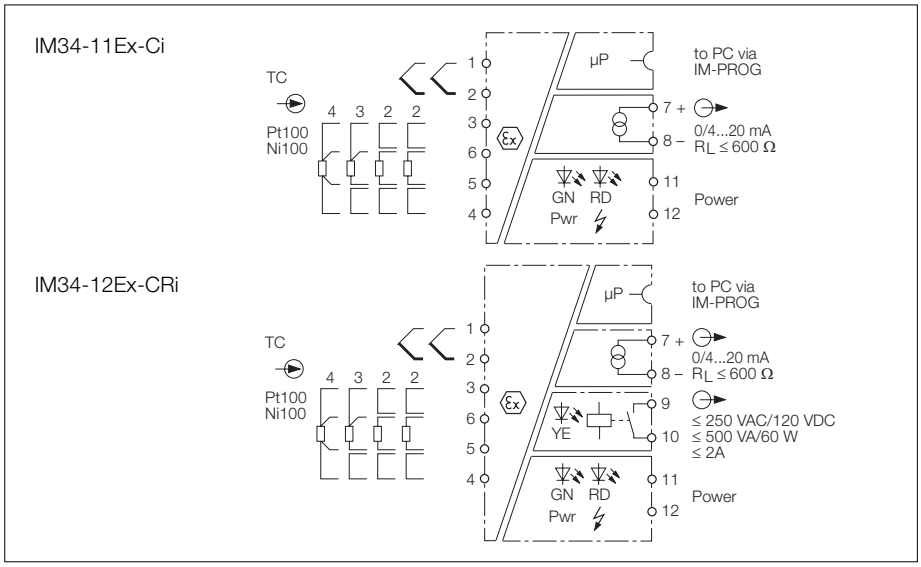

Temperature Measuring Amplifier IM34-11-Ex-Ci/IM34-12-Ex-CRi

Type	IM34-11Ex-Ci	IM34-12Ex-CRi
Ident.-no.	7506633	7506632
Supply voltage U_B	20...250 VAC/20...125 VDC	
Line frequency (AC)	40...70 Hz	
Power consumption	≤ 3 W	
Galvanic isolation	between input and output circuit and supply voltage for 250 V_{rms}, test voltage 2.5 kV_{rms}	
Input circuit	intrinsically safe according to EN 50020 version Ni100 and Pt100 (IEC 751), 2, 3 and 4-wire technology measuring range -200...800 K (Pt100), -60...250 K (Ni100) thermoelements B, E, J, K, N, R, S, T (ITS 90/IEC 584), L (DIN 43710) extra-low voltages with a measuring span of -160 mV...+160 mV	
Resistor current Pt100/Ni100	approx. 200 µA	
Output circuits		
current output	0/4…20 mA (load ≤ 600 Ω)	0/4…20 mA (load ≤ 600 Ω)
Relay output	–	1 normally open contact
– Switching voltage	–	≤ 250 VAC/120 VDC
– Switching current	–	≤ 2 A
– Switching capacity	–	≤ 500 VA/60 W
– Switching frequency	–	≤ 10 Hz
– Switching hysteresis	–	programmable
– Contact materials:	–	Ag alloy + 3 µm Au
Ex-approvals acc. to certificate of conformity	TÜV 02 ATEX 1898	TÜV 02 ATEX 1898
Input circuit		
– Max. values		
No-load voltage U_0	5 V	5 V
Short-circuit current I_0	2 mA	2 mA
Power P_0	2.6 mW	2.6 mW
Internal inductances/capacitances L_i/C_i	0.2 mH/–	0.2 mH/–
Max. external inductances/capacitances L_0/C_0		
– [EEx ia] IIC	1000 mH/100 µF	1000 mH/100 µF
– [EEx ia] IIB	1000 mH/1000 µF	1000 mH/1000 µF
Marking of the Device	II (1) GD [EEx ia] IIC	II (1) GD [EEx ia] IIC
Transfer characteristics		
Accuracy	see page 3 – 45	
Total error	see from page 3 – 46 on	
Rise time (10 %…90 %)	< 1 s	
Release time (90 %…10 %)	< 1 s	
Response time	< 1 s	
LED indications		
– Power	green	green
– Error	red	red
– Switching status	–	yellow
Housing	12 poles, 18 mm wide, Polycarbonatet/ABS, flammability class V-0 per UL94	
Mounting	snap-on hat rail (DIN 50022) or panel screw mounting	
Connection	removable terminal blocks, polarity protected screw connection, self-lifting	
Connection profile	≤ 1 x 2.5 mm², 2 x 1.5 mm² or 2 x 1.0 mm² with wire sleeves	
Degree of protection (IEC 60529/EN 60529)	IP20	
Operating temperature	-25…+70 °C	

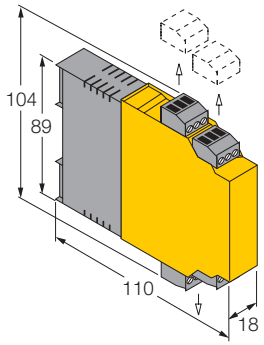

Accuracy Ratings

Accuracy – extra-low voltage input

Basic accuracy:
α = 10 µV =>
31.25 ppm of measuring span/K (320 mV)

Temperature coefficient:
β = 1 µV/K =>
3.13 ppm of measuring span (320 mV)

Long-term stability
χ = 1 µV/p. a. =>
3.13 ppm of measuring span (320 mV)

$\Delta_{mV} = \pm (\alpha + \beta \cdot |T_U - 25\ °C| + \chi \cdot age)$

For example: Assumption: T_U = 50 °C, age = 5 years

$\Delta_{mV} = \pm (10\ \mu V + 1\ \mu V/K \cdot |50\ °C - 25\ °C| + 1\ \mu V/years \cdot 5\ years = \pm 40\ \mu V$

Accuracy – RTD input

Basic accuracy:
α = 50 mΩ
25 ppm of measuring span (2000 Ω)

Temperature coefficient:
=> β = 0.75 mΩ/K
0.38 ppm of measuring span (2000 Ω)

Long-term stability
=> χ = 1 mΩ/p. a. =>
0.5 ppm of measuring span (2000 Ω)

$\Delta_{RTD} = \pm (\alpha + \beta \cdot |T_U - 25\ °C| + \chi \cdot age)$

For example: Assumption: T_U = 35 °C, age = 1 year

$\Delta_{RTD} = \pm (50\ m\Omega + 0{,}75\ m\Omega/K \cdot |35\ °C - 25\ °C| + 1\ m\Omega/year \cdot 1\ year = \pm 58.5\ m\Omega$

Accuracy – thermoelement input with internal cold junction compensation

$\Delta_{KSI} = \pm\ 1.5\ K$

Accuracy – current output

Basic accuracy:
α = 5 µA =>
250 ppm of final value (20 mA)

Temperature coefficient:
β = 0.5 µA/K =>
25 ppm of final value (20 mA)

Long-term stability
χ = 1 µA/p. a. =>
50 ppm of final value (20 mA)

$\Delta_I = \pm (\alpha + \beta \cdot |T_U - 25\ °C| + \chi \cdot age)$

For example: Assumption: T_U = 25 °C, age = 1 year

$\Delta_I = \pm (5\ \mu A + 0.5\ \mu A/K \cdot |25\ °C - 25\ °C| + 1\ \mu A/year \cdot 1\ year = \pm 6\ \mu A$

Temperature Measuring Amplifier IM34-11-Ex-Ci/IM34-12-Ex-CRi

Total Error – Extra-low Voltage Input and RTD Input

Total error –
extra-low voltage input

Output: 0...20 mA

$$\Delta_G = \pm \left(\frac{|\Delta_I|}{\frac{20\ \text{mA}}{|\text{MBA - MBE}|}} + |\Delta_{mV}| \right)$$

Output: 4...20 mA

$$\Delta_G = \pm \left(\frac{|\Delta_I|}{\frac{16\ \text{mA}}{|\text{MBA - MBE}|}} + |\Delta_{mV}| \right)$$

For example: Assumption: T_U = 40 °C, age = 2 years, output: 4...20 mA, MBA = 0 mV, MBE = 100 mV

1) Accuracy calculation - extra-low voltage input (s. page 3 – 45) => Δ_{mV} = ± 27 µV

2) Accuracy calculation - current output (s. page 3 – 45) => Δ_I = ± 14.5 µA

3) Total error calculation - extra-low voltage input

$$\Delta_G = \pm \left(\frac{|14.5\ \mu\text{A}|}{\frac{16\ \text{mA}}{|0 - 100\ \text{mV}|}} + |27\ \mu\text{V}| \right) = \pm\ 117\ \mu\text{V}$$

Total error –
RTD input (4-wire operation)

Output: 0...20 mA

$$\Delta_G = \pm \left(\frac{|\Delta_I|}{\frac{20\ \text{mA}}{|\text{MBA - MBE}|}} + |\Delta_{Td}| \right)$$

Output: 4...20 mA

$$\Delta_G = \pm \left(\frac{|\Delta_I|}{\frac{16\ \text{mA}}{|\text{MBA - MBE}|}} + |\Delta_{Td}| \right)$$

Digital temperature Td:
The digital temperature is the digitised value of the analogue sensor value of the Pt100/Ni100. The block diagram illustrates the measuring operation:

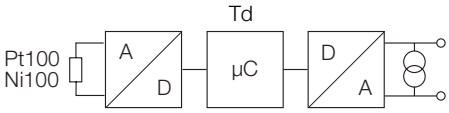

$\Delta_{Td} \leq \Delta_{RTD} / \alpha_T$		
	Sensitivity α_{Tmin} (see note)	For example: Δ_{RTD} = ± 50 mΩ
Type	α_{Tmin}	Δ_{Tdmax}
Pt100	300 mΩ/K	± 0.16 K
Ni100	470 mΩ/K	± 0.1 K

Please note:
The sensitivity rating $\boldsymbol{\alpha}_{Tmin}$ is a „worst-case“ assessment and is generally better. The maximum digital temperature Td of a faulty Pt100/Ni100 RTD can be calculated as follows:

In case of display via the DTM, the total error is reduced to the digital temperature Td.

For example: Assumption: Probe: Pt100, T_U = 40 °C, MBA = 0 °C, MBE = 100 °C, age = 10 years, output: 0...20 mA

1) Accuracy calculation - RTD input (s. page 3 – 45) => Δ_{RTD} = ± 71.25 mΩ

2) Accuracy calculation - current output (s. page 3 – 45) => Δ_I = ± 22.5 µA

3) Total error calculation – RTD input

$$\Delta_G = \pm \left(\frac{|22.5\ \mu\text{A}|}{\frac{20\ \text{mA}}{|0 - 100\ °\text{C}|}} + |0.24\ \text{K}| \right) = \pm\ 0.35\ \text{K}$$

MBA = lower measuring range value
MBE = upper measuring range value

Total Error – Thermoelement Input with External Cold Junction Compensation

Total error – thermoelement input

Output: 0...20 mA

$$\Delta_G = \pm \left(\frac{|\Delta_I|}{\frac{20\ \text{mA}}{|\text{MBA} - \text{MBE}|}} + |\Delta_{Td}| \right)$$

Output: 4...20 mA

$$\Delta_G = \pm \left(\frac{|\Delta_I|}{\frac{16\ \text{mA}}{|\text{MBA} - \text{MBE}|}} + |\Delta_{Td}| \right)$$

Please note:
The sensitivity rating α_{Tmin} is a „worst-case“ assessment and is generally better. The maximum digital temperature Td of a faulty thermovoltage can be calculated as follows: When using, e.g., type B, the sensitivity rises from 4 µV/K at 400 °C up to 12 µV/K at 1600 °C. At 50 µV and 400 °C the error is 12.5 K and at 1600 °C it drops to 4 K. Thus it becomes clear that type B is better suited for higher temperatures.

In case of display via the DTM, the total error is reduced to the digital temperature Td.

Digital temperature Td:
The digital temperature is the digitised value of the analogue sensor value of the thermoelement. The block diagram illustrates the measuring operation:

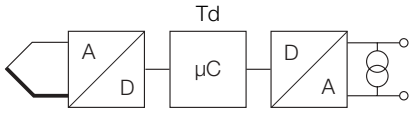

External cold junction point compensation: $\Delta_{Td} = \Delta_{mV} / \alpha_{Tmin} + \Delta_{TdCJC}$ [1] Internal cold junction point compensation: $\Delta_{Td} = \Delta_{mV} / \alpha_{Tmin} + \Delta_{KSI}$ (Δ_{KSI} = ± 1.5 K)		
	Sensitivity α_{Tmin} (see note)	Example: Δ_{mV} = ± 10 µV
Type	α_{Tmin}	$\Delta_{TdThermo}$
J	41 µV/K	± 0.24 K
B	4.0 µV/K	± 2.50 K
E	45 µV/K	± 0.22 K
K	30 µV/K	± 0.33 K
L	39 µV/K	± 0.25 K
N	21 µV/K	± 0.47 K
R	3.7 µV/K	± 2.70 K
S	3.9 µV/K	± 2.56 K
T	28 µV/K	± 0.36 K

Example for external cold junction compensation CJC: Assumption:
Thermoelement type T, external cold junction compensation via Ni100 (2-wire operation), MBA = 500 °C, MBE = 1000 °C, T_U = 60 °C, age = 3 years, output: 0...20 mA

1) Accuracy calculation - extra-low voltage input (s. page 3 – 45) => Δ_{mV} = ± 48 µV

2) Accuracy calculation - RTD input (s. page 3 – 45) => Δ_{RTD} = ± 79 mΩ
(in case of 2-wire operation multiply by 2 => Δ_{RTD} = ± 158.5 mΩ

3) Δ_{TdCJC} = 158.5 mΩ/300 mΩ/K = 0.52 K

4) $\Delta_{TdThermo}$ = 48 µV/28 µV/K = 1.7 K

5) $\Delta_{Td} = \Delta_{TdCJC} + \Delta_{TdThermo}$ = 2.23 K

6) Accuracy calculation - current output (s. page 3 – 45) => Δ_I = ± 25.5 µA

7) Total error calculation – thermoelement input

$$\Delta_G = \pm \left(\frac{|25.5\ \mu\text{A}|}{\frac{20\ \text{mA}}{|550\ °\text{C} - 1000\ °\text{C}|}} + |2.23\ \text{K}| \right) = \pm 2.87\ \text{K}$$

[1] With external cold junction compensation via RTD the digital temperature also has to be considered.

3

Temperature Measuring Amplifier IM34-11-Ex-Ci/IM34-12-Ex-CRi

Total Error – Thermoelement Input with Internal Cold Junction Compensation

Total error – thermoelement input

Output: 0...20 mA

$$\Delta_G = \pm \left(\frac{|\Delta_I|}{\frac{20\ \text{mA}}{|\text{MBA - MBE}|}} + |\Delta_{Td}| \right)$$

Output: 4...20 mA

$$\Delta_G = \pm \left(\frac{|\Delta_I|}{\frac{16\ \text{mA}}{|\text{MBA - MBE}|}} + |\Delta_{Td}| \right)$$

Example for internal cold junction compensation: Assumption:
Thermoelement type J, internal cold junction compensation via Ni100,
MBA = 400 °C, MBE = 800 °C, T_U = 40 °C, age = 5 years, output: 4...20 mA

1) Accuracy calculation - extra-low voltage input (s. page 3 – 45) => $\Delta_{mV} = \pm$ 30 µV

2) Δ_{Td} = 30 µV/41µV/K + 1.5 K = 2.23 K

3) Accuracy calculation - current output (s. page 3 – 45) => $\Delta_I = \pm$ 17.5 µA

4) Total error calculation – thermoelement input

$$\Delta_G = \pm \left(\frac{|17.5\ \mu\text{A}|}{\frac{16\ \text{mA}}{|400\ °\text{C} - 800\ °\text{C}|}} + |2.23\ \text{K}| \right) = \pm\ 2.66\ \text{K}$$

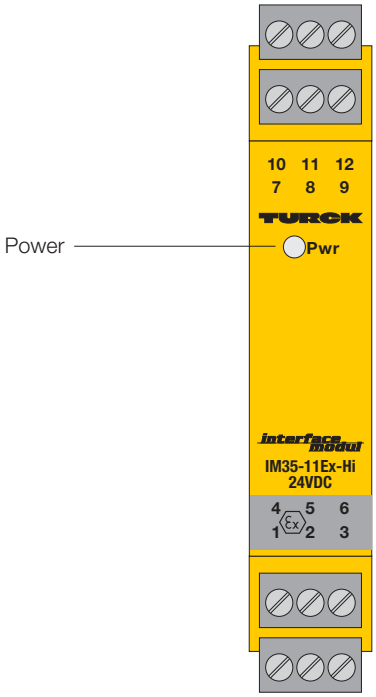

HART®-Analogue Data Transmitter IM35-11Ex-Hi/24VDC 1-channel

3

- **1-channel HART® analogue data transmitter with removable terminal blocks**
- **Intrinsically safe output circuit EEx ia**
- **Area of application according to ATEX: II (1) GD**
- **Transmission of current signals 0/4…20 mA**
- **Supply of intelligent actuators with HART® communication**
- **Linearity ≤ 0.1 %**
- **Temperature drift ≤ 0.01 %/K**
- **Galvanic isolation between input circuit, output circuit and supply voltage**
- **Test sockets, Ø 2 mm**

The single-channel data transmitter IM35-11Ex-Hi/... is designed to transfer standard galvanically isolated current signals from the safe area to the explosion hazardous area in a 1:1 transmission mode.

In addition to the analogue signal, digital HART® communication signals can be transferred bidirectionally.

Typical applications are the control of I/P converters (e.g. at control valves/ actuators) or of indicator displays in explosion hazardous areas.

The actuator is connected to the output terminals 1/2. Handheld terminals [HHT] may be connected to the output terminals and input terminals 7/10.

The device is equipped with test sockets (Ø 2 mm) on the removable terminal blocks for signal control.

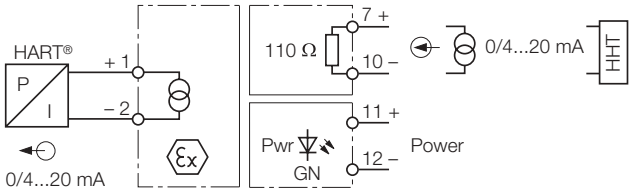

HART® Analogue Data Transmitter IM35-11Ex-Hi

Type	IM35-11Ex-Hi/24VDC
Ident.-no.	7506516
Supply voltage U_B	19...29 VDC
Ripple W_{pp}	≤ 10 %
Power consumption	≤ 1.9 W
Galvanic isolation	between output and input circuit and supply voltage for 250 V_{rms} Test voltage 4 kV_{rms}
Input circuit	
Input current	0...20 mA (up to 24 mA can be transferred at a load of ≤ 430 Ω)
Input resistance	110 Ω
Output circuit	intrinsically safe according to EN 50020
Output current	0/4…20 mA, (up to 24 mA can be transferred at a load of ≤ 430 Ω)
Load	≤ 600 Ω
Ex-approvals acc. to certificate of conformity	TÜV 03 ATEX 2311
Output circuit	
Max. values	
– No-load voltage U_0	15.9 V
– Short-circuit current I_0	60 mA
– Internal resistance R_i	528 Ω
Internal inductances/capacitances L_i/C_i	-/ 5 nF
Max. external inductances/capacitances L_0/C_0	
– [EEx ia] IIB	10 mH /860 nF (alt. 0.5 mH/2.2 µF)
– [EEx ia] IIC	5 mH /140 nF (alt. 0.5 mH/330 nF)
– Power/current consumption I_o	470 mW
Marking of the Device	II (1) GD [EEx ia] II C
Transfer characteristics	
Linearity error at limit value	≤ 0.1 % of final value.
Measuring tolerance	≤ 0.2 % of final value.
Long-term error	≤ 0.05 %/year
Effect of load impedance	≤ 0.02 % of final value.
Effect of supply voltage impedance	≤ 0.05 % of final value.
Ambient temperature sensitivity	≤ 0.01 %/K
Rise time (10 %…90 %)	< 90 ms
Release time (90 %…10 %)	< 90 ms
LED indication	
– Power	green
Housing	12-poles, 18 mm wide, Polycarbonate/ABS flammability class V-0 per UL94
Mounting	snap-on hat rail (DIN 50022) or panel screw mounting
Connection	removable terminal blocks, polarity protected screw connection, self-lifting
Connection profile	≤ 1 x 2.5 mm², 2 x 1.5 mm² or 2 x 1.0 mm² with wire sleeves
Degree of protection (IEC 60529/EN 60529)	IP20
Operating temperature	-25…+70 °C

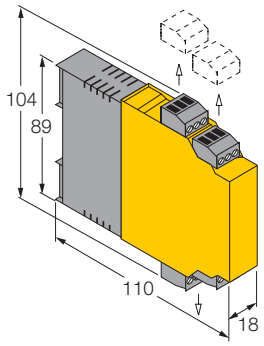

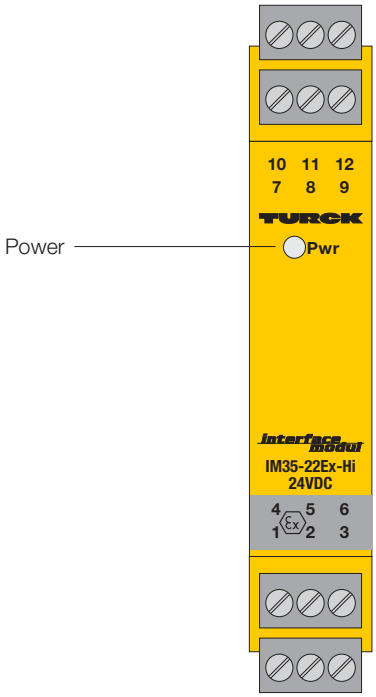

HART®-Analogue Data Transmitter IM35-22Ex-Hi/24VDC 2-channel

3

- **2-channel HART® analogue data transmitter with removeable terminal blocks**
- **Intrinsically safe output circuits EEx ia**
- **Area of application according to ATEX: II (1) GD**
- **Transmission of current signals 0/4…20 mA**
- **Supply of intelligent actuators with HART® communication**
- **Linearity ≤ 0.1 %**
- **Temperature drift ≤ 0.01 %/K**
- **Galvanic isolation between input circuit, output circuit and supply voltage**
- **Test sockets, Ø 2 mm**

The two-channel data transmitter IM35-22Ex-Hi/... is designed to transfer standard galvanically isolated current signals from the safe area to the explosion hazardous area in a 1:1 transmission mode.

In addition to the analogue signal, digital HART®communication signals can be transferred bidirectionally.

Typical applications are the control of I/P converters (e.g. at control valves/ actuators) or of indicator displays in explosion hazardous areas.

The actuators are connected to the output terminals 1/2 and 4/5. Handheld terminals [HHT] may be connected to the output terminals and input terminals 7/10 and 8/9.

The device is equipped with test sockets (Ø 2 mm) on the removeable terminal blocks for signal control.

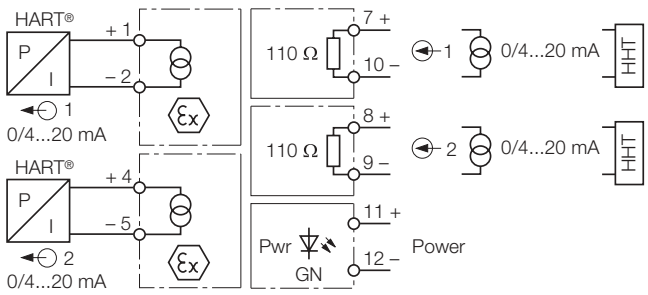

HART® Analogue Data Transmitter IM35-22Ex-Hi

Type	IM35-22Ex-Hi/24VDC
Ident.-no.	7506515
Supply voltage U_B	19...29 VDC
Ripple W_{pp}	≤ 10 %
Power consumption	2.2 W
Galvanic isolation	between output and input circuit and supply voltage for 250 V_{rms} test voltage 4 kV_{rms}
Input circuits	
Input current	0...20 mA (up to 24 mA can be transferred at a load of ≤ 430 Ω)
Input resistance	110 Ω
Output circuits	intrinsically safe according to EN 50020
Output current	0/4…20 mA, (up to 24 mA can be transferred at a load of ≤ 430 Ω)
Load	≤ 600 Ω
Ex-approvals acc. to certificate of conformity	TÜV 03 ATEX 2311
Output circuit	
Max. values	
– No-load voltage U_0	15.9 V
– Short-circuit current I_0	60 mA
– Internal resistance R_i	528 Ω
Internal inductances/capacitances L_i/C_i	– / 5 nF
Max. external inductances/capacitances L_0/C_0	
– [EEx ia] IIB	10 mH /860 nF (alt. 0.5 mH/2.2 µF)
– [EEx ia] IIC	5 mH /140 nF (alt. 0.5 mH/330 nF)
– Power/current consumption I_o	470 mW
Marking of the Device	II (1) GD [EEx ia] II C
Transfer characteristics	
Linearity error at limit value	≤ 0.1 % of final value.
Measuring tolerance	≤ 0.2 % of final value.
Long-term error	≤ 0.05 %/year
Effect of load impedance	≤ 0.02 % of final value.
Effect of supply voltage impedance	≤ 0.05 % of final value.
Ambient temperature sensitivity	≤ 0.01 %/K
Rise time (10 %…90 %)	< 90 ms
Release time (90 %…10 %)	< 90 ms
LED indication	
– Power	green
Housing	12-poles, 18 mm wide, Polycarbonate/ABS flammability class V-0 per UL94
Mounting	snap-on hat rail (DIN 50022) or panel screw mounting
Connection	removable terminal blocks, polarity protected screw connection, self-lifting
Connection profile	≤ 1 x 2.5 mm², 2 x 1.5 mm² or 2 x 1.0 mm² with wire sleeves
Degree of protection (IEC 60529/EN 60529)	IP20
Operating temperature	-25…+70 °C

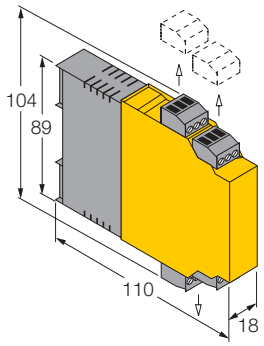

 Hans Turck GmbH & Co.KG • D–45466 Mülheim/Ruhr • Tel. 0208/4952-0 • Fax 0208/4952-264 • E-Mail: turckmh@mail.turck-globe.de • www.turck.com

HART®– Analogue Data Transmitter MK35-11Ex-HLi

- **Passive isolator without auxiliary power**
- **Intrinsically safe output circuit**
- **Transmission of current signals 0/4…20 mA**
- **Supply of intelligent actuators using the Hart® communication protocol**
- **FSK bus connection**[1)]
- **Linearity error ≤ 0.1 %**
- **Temperature drift ≤ 0.1 %/10 K**
- **Galvanic isolation between input circuit and output circuit**
- **Additional power supply not necessary**

[1)] FSK = frequency shift keying

The analogue data transmitter MK35-11Ex-HLi is designed to isolate and transmit standard current signals from the safe to the hazardous area. The signals are transferred without attenuation (1:1 transfer).

In addition to analogue signals, digital Hart® communication signals can be transferred bidirectionally.

The device is typically used to drive I/P transducers (e.g. for valve control) or display devices in the hazardous area.

The actuator is connected to terminals 1/4. Handheld terminals [HHT] can be connected to output terminals 1/4, input terminals 8/9 or to the FSK bus terminals 7/10.

The analogue data transmitter does not require auxiliary power (loop powered) and can be connected directly to the supply inputs of control systems.

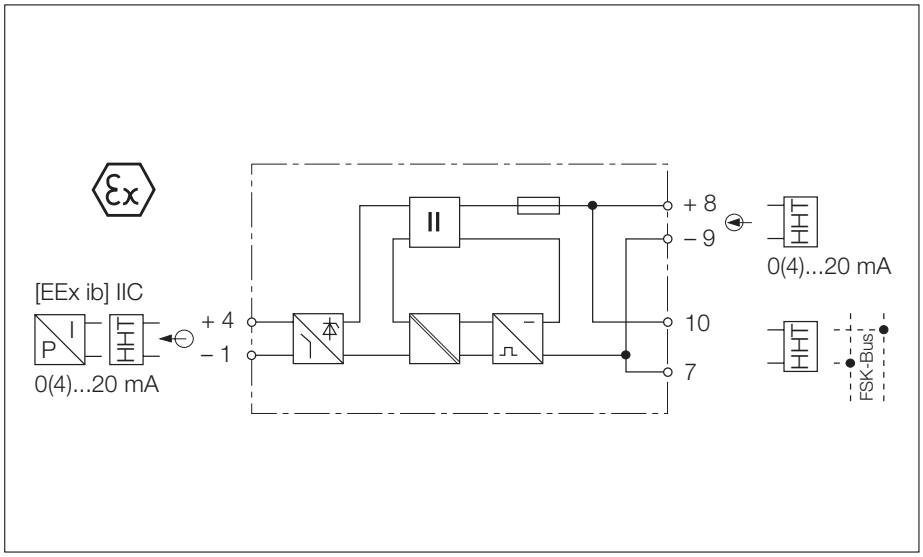

HART®– Analogue Data Transmitter MK35-11Ex-HLi

Type	MK35-11Ex-HLi
Ident-No.	7506510
Galvanic isolation	between input circuit and output circuit for 250 V_{rms}, test voltage 2.3 kV_{rms}
Input circuits	
Voltage drop	< 3.5 V (100...600 Ω load impedance)
Input current	0/4...20 mA
Overload	> 23.6 mA
Output circuits	intrinsically safe according to EN 50020
Current output terminals 1/4	0/4…20 mA, 20...30 mA (input override)
Ripple W_{PP}	< 0.25 % without input interference voltage
Load impedance	0...600 Ω
FSK-interface terminals 7/10	0...30 VDC
Ex-approvals acc. to certificate of conformity	pending
Output circuits	
Maximum values	
– No load voltage U_0	–
– Short-circuit current I_0	–
– Power P_0	–
Internal inductances/capacitances	–
Max. external inductances/capacitances L_0/C_0	
– [EEx ib] IIB	–
– [EEx ib] IIC	–
Transfer characteristics	
Linearity tolerance of setpoint adjustment	≤ 0.1 % of final value
Measuring tolerance	≤ 0.1 % at $R_a = 0$
Load impedance	≤ 0.18 % in load range 0...$R_{a\,max}$
Ambient temperature sensitivity	≤ 0.1 %/10 K (at < -10 °C 0.25 %/10 K)
Pulse rise time (10 %…90 %)	< 50 ms
Release time (90 %…10 %)	< 50 ms
Housing	12-pole, 27 mm wide, Polycarbonate/ABS flammability class V-0 per UL 94
Mounting	snap-on clamps for top-hat rail (DIN 50022) or srew terminals for panel mounting
Connection	via flat terminals with self-lifting pressure plates
Connection profile	≤ 2 x 2.5 mm² or 2 x 1.5 mm² with wire sleeves
Degree of protection (IEC 60529/EN 60529)	IP20
Operating temperature	-25…+60 °C

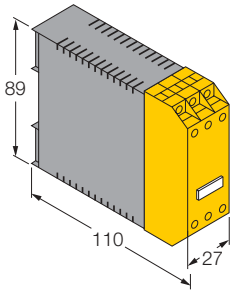

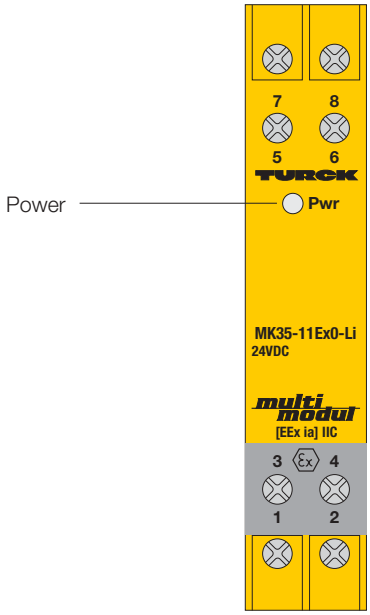

Analogue Data Repeater MK35-11Ex0-Li/24VDC 1-channel

3

- **1-channel analogue data repeater**
- **Intrinsically safe output circuit EEx ia**
- **Area of application according to ATEX: II (1) GD**
- **Transmission of 0…20 mA current signals**
- **Linearity ≤ 0.1 %**
- **Temperature drift ≤ 0.01 %/K of final value**
- **Galvanic isolation between input circuit, output circuit and supply voltage**

The MK35-11Ex0-Li/... single channel analogue data repeaters are used to isolate and convert standard current signals which are passed 1:1 without attenuation from the explosion non-hazardous area to hazardous area.

Typical repeater applications include driving I/P transducers (e. g. for valve control) or display devices located in hazardous areas.

If the transfer of digital information to HART® terminals is required in addition to analogue data transfer, the HART®-compatible Ex output isolators IM35-11Ex-Hi/24VDC and IM35-22Ex-Hi/24VDC are available.

A green LED indicates that the device is powered.

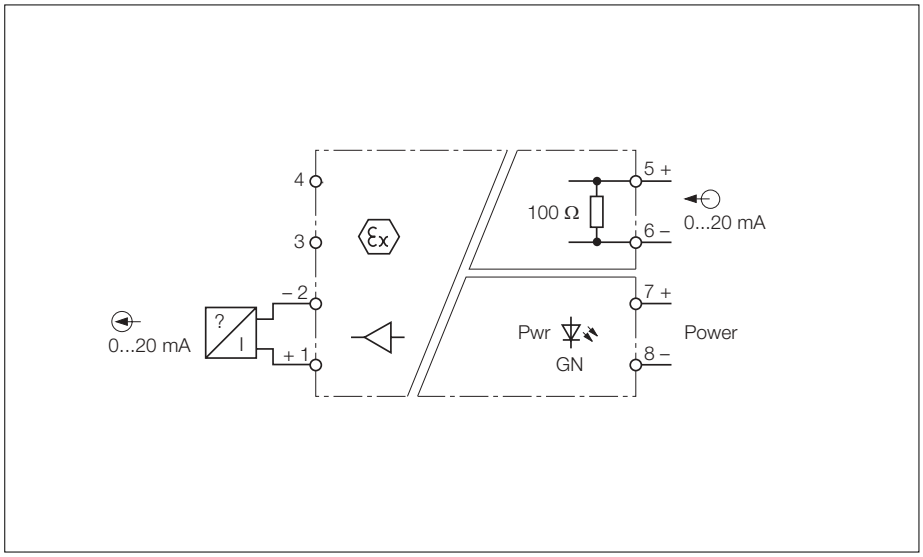

Analogue Data Repeater MK35-11Ex0-Li

Type	MK35-11Ex0-Li/24VDC
Ident-No.	7506501
Supply voltage U_B	19...29 VDC
Ripple W_{PP}	≤ 10 %
Current consumption	approx. 50 mA
Galvanic isolation	between input circuit, output circuit and supply voltage for 250 V_{rms} test voltage 4 kV_{rms}
Input circuits	
Current input	
– Input resistance	≤ 100 Ω
– Operating characteristics	0… 20 mA (< 40 mA)
Output circuits	intrinsically safe according to EN 50020
Current output (1 and 2)	
Output current	0…20 mA
Load impedance	≤ 500 Ω
Ex-approvals acc. certificate of conformity	TÜV 01 ATEX 1659
Maximum values	
– No load voltage U_0	13.8 V
– Short-circuit current I_0	61 mA
– Internal resistance R_i	362 Ω
Max. external inductances/capacitances L_0/C_0	
– [EEx ia/ib] IIC	10 mH/760 nF
– [EEx ia/ib] IIC	25 mH/4.9 µF
Marking of devices	II (1) GD [EEx ia] IIC
Transfer characteristics	
Linearity tolerance	≤ 0.1 % of final value
Measuring tolerance	≤ 0.2 % (linearity tolerance is included in the measuring tolerance)
Load impedance	≤ 0,01 %
Effect of load impedance	≤ 0,01 %
Ambient temperature sensitivity	≤ 0.01 %/K of final value
Pulse rise time (10 %...90 %)	< 50 ms
Release time (90 %..0.10 %)	< 50 ms
LED indication	
– Power	green
Housing	8-pole, 18 mm wide, Polycarbonate/ABS flammability class V-0 conform to UL 94
Mounting	snap-on clamps for top-hat rail (DIN 50022) or screw terminals for panel mounting
Connection	via flat terminals with self-lifting pressure plates
Connection profile	≤ 2 x 2.5 mm^2 or 2 x 1.5 mm^2 with wire sleeves
Degree of protection (IEC 60529/EN 60529)	IP20
Operating temperature range	-25…+60 °C

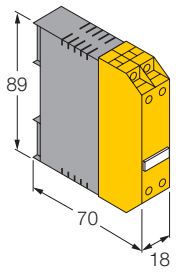

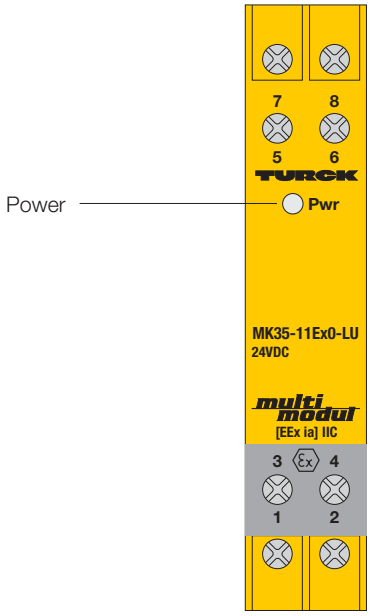

Analogue Data Repeater MK35-11Ex0-LU/24VDC 1-channel

3

- **1-channel analogue data repeater**
- **Intrinsically safe output circuit EEx ia**
- **Area of application according to ATEX: II (1) GD**
- **Transmission of 0...10 V voltage signals**
- **Linearity ≤ 0.1 %**
- **Temperature drift ≤ 0.01 %/K of final value**
- **Galvanic isolation between input circuit, output circuit and supply voltage**

The MK35-11Ex0-LU/... single channel analogue data repeaters are used to isolate and convert standard voltage signals which are passed 1:1 without attenuation from the explosion non-hazardous area to hazardous area.

A typical repeater application includes display devices located in hazardous areas.

A green LED indicates that the device is powered.

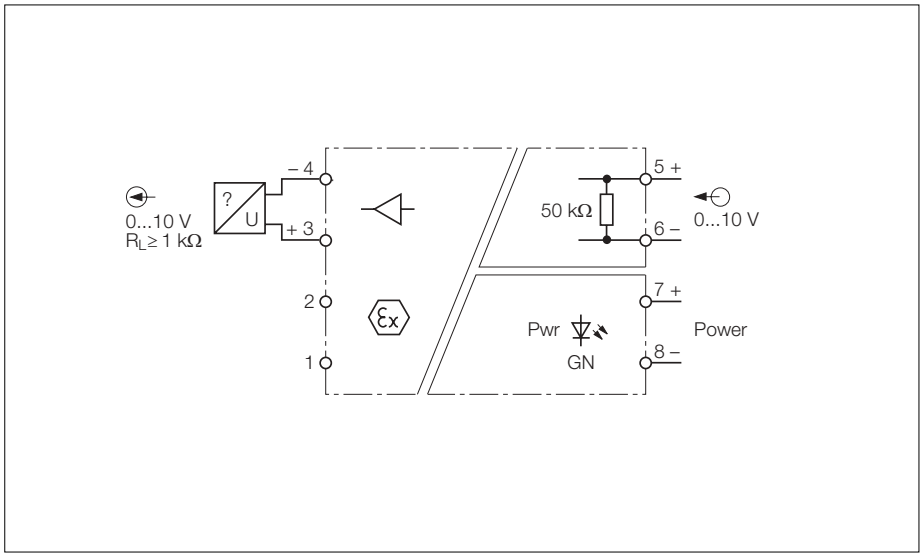

Analogue Data Repeater MK35-11Ex0-LU

Type	MK35-11Ex0-LU/24VDC
Ident-No.	7506701
Supply voltage U_B	19...29 VDC
Ripple W_{PP}	≤ 10 %
Current consumption	approx. 50 mA
Galvanic isolation	between input circuit, output circuit and supply voltage for 250 V_{rms} test voltage 4 kV_{rms}
Input circuits	
Current input	
– Input resistance	50 kΩ
– Operating characteristics	0...10 V
Output circuits	intrinsically safe according to EN 50020
Voltage output (3 and 4)	
Output voltage	0...10 V
Load resistance	≥ 1 kΩ
Ex-approvals acc. certificate of conformity	TÜV 01 ATEX 1659
Maximum values	
– No load voltage U_0	13.8 V
– Short-circuit current I_0	61 mA
– Internal resistance R_i	722 Ω
Max. external inductances/capacitances L_0/C_0	
– [EEx ia/ib] IIC	25 mH/0,76 µF
– [EEx ia/ib] IIC	50 mH/4.9 µF
Marking of devices	II (1) GD [EEx ia] IIC
Transfer characteristics	
Linearity tolerance	≤ 0.1 % of final value
Measuring tolerance	≤ 0.2 % (linearity tolerance is included in the measuring tolerance)
Load impedance	≤ 0,01 %
Effect of load impedance	≤ 0,01 %
Ambient temperature sensitivity	≤ 0.01 %/K of final value
Pulse rise time (10 %...90 %)	< 50 ms
Release time (90 %..0.10 %)	< 50 ms
LED indication	
– Power	green
Housing	8-pole, 18 mm wide, Polycarbonate/ABS flammability class V-0 conform to UL 94
Mounting	snap-on clamps for top-hat rail (DIN 50022) or screw terminals for panel mounting
Connection	via flat terminals with self-lifting pressure plates
Connection profile	≤ 2 x 2.5 mm^2 or 2 x 1.5 mm^2 with wire sleeves
Degree of protection (IEC 60529/EN 60529)	IP20
Operating temperature range	-25…+60 °C

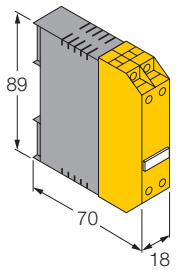

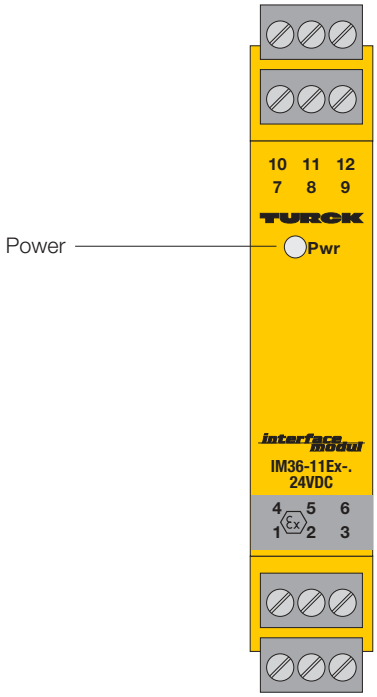

Potentiometer Transducers IM36-11Ex-i/24VDC IM36-11Ex-U/24VDC 1-channel

3

- **1-channel potentimeter transducers with removable terminal blocks**
- **Intrinsically safe input circuit EEx ia**
- **Area of application according to ATEX: II (1) GD**
- **Galvanic isolation and transmission of potentiometer signals from explosion hazardous areas**
- **Output circuit 0/4…20 mA or 0/2...10 V**
- **Linearity ≤ 0.1 %**
- **Temperature drift ≤ 0.02 %/K v. E.**

The potentiometer transducers IM36-11Ex-i... and IM36-11Ex-U... isolate signals from 3-wire or 5-wire potentiometers and transfer these as standard analogue signals from the hazardous to the non-hazardous area. The resistance value of the potentiometer's wiper contact, ranging from 0 Ω to the nominal resistance value (final value) of the potentiometer, is detected and processed linearly.
A potentiometer is defined by its nominal value. Any potentiometer with a nominal resistance value within a range of 800...20000 Ω may be connected. Thus common potentiometer types, e.g. with a nominal resistance value of 1 kΩ or 10 kΩ, may be used.
The permissible line resistance may not exceed 50 Ω at a potentiometer resistance of 800 Ω.
There are devices with a current output of 0/4...20 mA (IM36-11Ex-i...) or a voltage output of 0/2...10 V (IM36-11Ex- U...).
The devices feature galvanic isolation between input circuit, output circuit and power supply.

A green LED indicates that the device is powered.

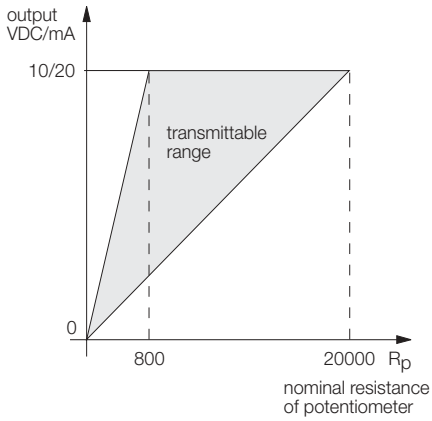

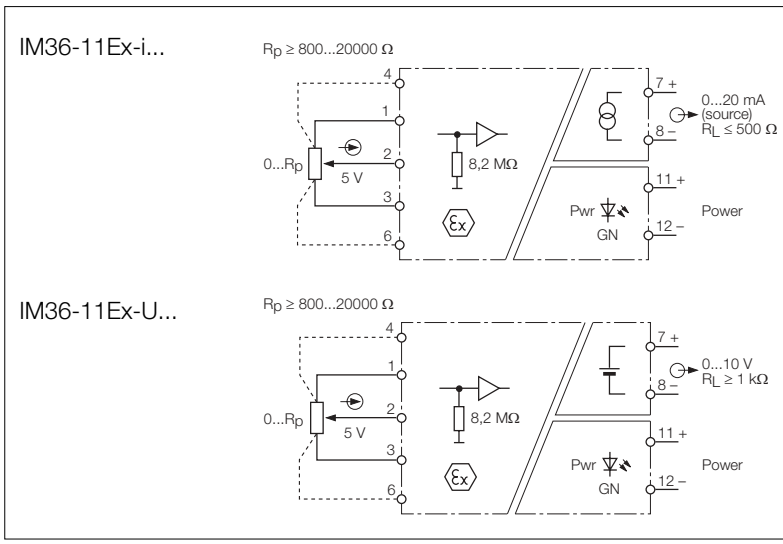

Potentiometer Transducers IM36-11Ex-i/IM36-11Ex-U

Type	IM36-11Ex-i/24VDC	IM36-11Ex-U/24VDC
Ident-no.	7509525	7509526
Supply voltage U_B	19...29 VDC	19...29 VDC
Ripple W_{PP}	≤ 10 %	≤ 10 %
Current consumption	≤ 60 mA	≤ 60 mA
Galvanic isolation	between input circuit, output circuit and supply voltage for 250 V_{rms} test voltage 2.5 kV_{rms}	between input circuit, output circuit and supply voltage for 250 V_{rms} test voltage 2.5 kV_{rms}
Input circuit	intrinsically safe according to EN 50020	intrinsically safe according to EN 50020
Potentiometer input	3/5-wire circuit	3/5-wire circuit
Potentiometer resistance	800...20 000 Ω	800...20 000 Ω
Line resistance	≤ 50 Ω at 800 Ω potentiometer resistance	≤ 50 Ω at 800 Ω potentiometer resistance
Voltage at potentiometer	5 V	5 V
Output circuit	current output	voltage output, short-circuit protected
Load impedance	≤ 500 Ω	–
Output current	0…20 mA	–
Load resistance	–	≥ 1 kΩ
Output current	–	0...10 V
Ex-Approvals acc. to certificate of conformity	TÜV 99 ATEX 1405	TÜV 99 ATEX 1405
Maximum values from both inputs		
– No load voltage U_0	13.8 V	13.8 V
– Short-circuit current I_0	35 mA	35 mA
– Power P_0	121 mW	121 mW
Max. external inductances/capacitances L_0/C_0		
– [EEx ia] IIC	20 mH / 760 nF	20 mH / 760 nF
– [EEx ia] IIB	100 mH / 4.9 µF	100 mH / 4.9 µF
Operating temperature T_u	-20…+60 °C	-20…+60 °C
Marking of devices	II (1) G [EEx ia] IIC	II (1) G [EEx ia] IIC
Transfer characteristics		
Linearity tolerance of setpoint adjustment	≤ 0.1 % of final value	≤ 0.1 % of final value
Measuring tolerance	≤ 0.2 % (typ. 0.1 %)	≤ 0.2 % (typ. 0.1 %)
Long term error	0.1 %/year	0.1 %/year
Ambient temperature sensitivity	≤ 0.02 %/K of final value	≤ 0.02 %/K of final value
Pulse rise time (10 %...90 %)	≤ 100 ms	≤ 100 ms
Release time (90 %...10 %)	≤ 100 ms	≤ 100 ms
LED indications		
– Power	green	green
Housing	12-pole, 18 mm wide, Polycarbonate/ABS flammability class V-0 per UL 94	
Mounting	snap-on clamps for top-hat rail (DIN 50022) or srew terminals for panel mounting	
Connection	removable terminal blocks, reverse-polarity protected, screw connection, self-lifting	
Connection profile	≤ 1 x 2,5 mm², 2 x 1,5 mm² or 2 x 1.0 mm² with wire sleeves	
Degree of protection (IEC 60529/EN 60529)	IP20	
Operating temperature	-25…+60 °C	

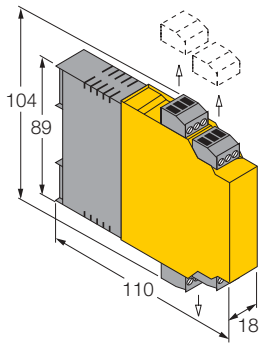

LOGIC CONTROLLERS

Logic Controllers Selection Guide

Housing Style *interfacemodul multimodul multisafe® multicart®*

Housing	interface modul				multi modul		multi safe®				multi cart®	
Type	IM43-13-R	IM43-13-SR	IM43-14-Ri	IM43-14-SRi	MK43-111-R	MK44-121-R	MS41-12Ex0-R	MS41-22Ex0-R	MS41-42Ex0-R	MS43-R	MC32-121Ex0-RP	MC43-221-RP
Functions												
Preset devices	●	●	●	●	●	●				●	●	●
Pulse counter/reducer							●					
Bistable amplifier relay								●				
Amplifier relay with logic functions									●			
Teach function via push-buttons		●		●								
Number of channels	1	1	1	1	1	1	1	1	1	1	1	1
Isolation												
Between input and output circuit	●	●	●	●		●	●	●	●	●	●	●
Between output and power supply	●	●	●	●		●	●	●	●	●	●	●
Between input and power supply	●	●	●	●		●	●	●	●	●	●	●
Input circuit per EN 60947-5-6							●	●	●			
Intrinsic. safe acc. to EN 50020							●	●	●		●	
Current input 0/4...20 mA	●	●	●	●	●					●		●
Voltage input 0/2...10 V	●	●	●	●						●		●
Pt100											●	
NTC resistors						●						
Input circuit monitoring						●				●	●	●
Wire-break and short-circuit, user programmable												
Switching frequency												
≤ 10Hz	●	●	●	●	●	●	●	●	●	●	●	●
Output circuits per channel												
Number of setpoint controls	3	3	3	3	1	1				2	2	2
Relay, NO(S) / SPDT(U) per channel	3S	3S	3S	3S	1U	2U	2U	2U	2U	2U	1U	1U
Transistor, pnp, per channel												1
Current output 0/4...20 mA			●	●								
Alarm output												●
Switching options												
NO/NC	●	●	●	●	●		●			●	●	
user programmable	●	●	●	●	●					●		
Supply voltage												
10…30 VDC											●	
24 VDC					●	●						●
115 VAC												
230 VAC					●	●						
Universal power supply	●	●	●	●			●	●	●	●		
20...250 VUC)	●	●	●	●						●		
(20...250 VAC/20...125 VDC)							●	●	●			
Data sheet – see page	3	5	3	5	7	9	11	13	17	21	**catalogue *multicart®***	

Hans Turck GmbH & Co.KG • D–45466 Mülheim/Ruhr • Tel. 0208/4952-0 • Fax 0208/4952-264 • E-Mail: turckmh@mail.turck-globe.de • www.turck.com

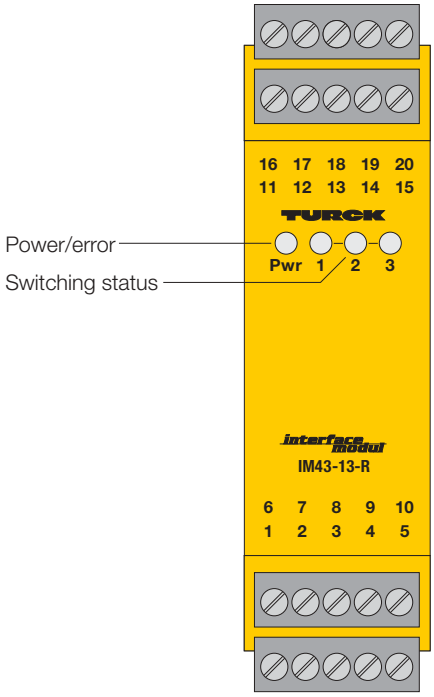

Limit Value Monitor
IM43-13-R
IM43-14-Ri
1-channel

- **1-channel limit value monitor with removable terminal blocks**
- **Input either via current input 0/4...20 mA or voltage input 0/2...10 V**
- **Supply of a two-wire or three-wire transmitter/sensor**
- **Limit value adjustment via coded rotary switch**
- **Three relay outputs, each with one normally open output**
- **Sealed relay with hard gold contacts**
- **Current output of 0/4...20 mA. (IM43-14-Ri only)**
- **Universal operating voltage (20...250 VUC)**

The limit value monitors IM43-13R and IM43-14-Ri are single-channel devices and alternatively monitor measuring currents of 0/4...20 mA or measuring voltages of 0/2...10 V.

The three limit values are set via the side coded rotary switches.

In addition, a voltage of approx. 18 V (at 35 mA max.) is provided, which can be used to power transmitters or sensors.

A green LED indicates that the device is powered. Three yellow LEDs indicate the switching status of the respective output.

The output mode and hysteresis are adjusted via DIP switches.

The type IM43-14-Ri is equipped with the following additional functions:

- For transfer to other devices there is a galvanically isolated analogue current output of 0/4...20 mA.
- The conversion of live-zero into dead-zero signals and vice-versa is selected via DIP switches. In the live zero mode the range of 4...20 mA is monitored. Outside this range (< 3,6 mA bzw. > 24 mA) an error indication is given. In this case the Power LED will illuminate red, the relays are de-energised and an error current of 0 or > 22 mA is output.
- If a faulty transmitter causes a short-circuit, the relays are de-energised and an error current of 0 or > 22 mA is output.

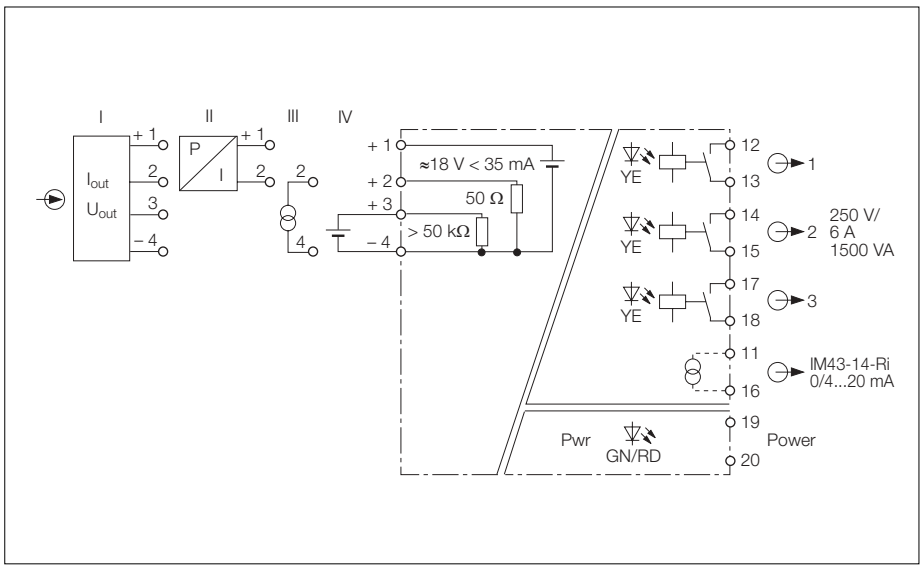

Limit Value Monitor IM43-13-R/IM43-14-Ri

Type	IM43-13-R	IM43-14-Ri
Ident-no.	7540040	7540042
Supply voltage U_B	20...250 VUC	20...250 VUC
Line frequency (AC)	40...70 Hz	40...70 Hz
Power consumption	≤ 4.8 W	≤ 4.8 W
Clearances and creepages		
Input circuit to output circuit	≥ 3 mm	≥ 3 mm
– output circuit to supply	≥ 3 mm	≥ 3 mm
– input circuit to supply	≥ 3 mm	≥ 3 mm
– test voltage	2 kV	2 kV
Input circuit	current and voltage input	current and voltage input
Current input		
– Input resistance	< 50 Ω	< 50 Ω
– Operating values	0/4...20 mA (overload protected up to 24 mA)	0/4...20 mA (overload protected up to 24 mA)
Voltage input		
– Input resistance	> 50 kΩ	> 50 kΩ
– Operating values	0/2...10 V (overload protected up to 20 V)	0/2...10 V (overload protected up to 20 V)
– Hysteresis (adjustable)	1; 2,5; 5; 10 %	1; 2,5; 5; 10 %
Ambient temperature sensitivity	75 ppm/K	75 ppm/K
Output circuit		
Relay output	three relay outputs	three relay outputs
– Contact configuration	1 normally open contact	1 normally open contact
– Switching voltage	≤ 250 VAC	≤ 250 VAC
– Switching current	≤ 6 A	≤ 6 A
– Switching capacity	≤ 1500 VA	≤ 1500 VA
Current output	–	0/4...20 mA
LED indications		
– Power/error (2-colour LED)	Power ON: green – Error: red	Power ON: green – Error: red
– Switching status	yellow	yellow
Housing	20 poles, 27 mm wide, Polycarbonatet/ABS, flammability class V-0 per UL94	
Mounting	snap-on hat rail (DIN 50022) or panel screw mounting	
Connection	removable terminal blocks, polarity protected screw connection, self-lifting	
Connection profile	≤ 1 x 2.5 mm², 2 x 1.5 mm² or 2 x 1.0 mm² with wire sleeves	
Degree of protection (IEC 60529/EN 60529)	IP20	
Operating temperature	-25…+70 °C	

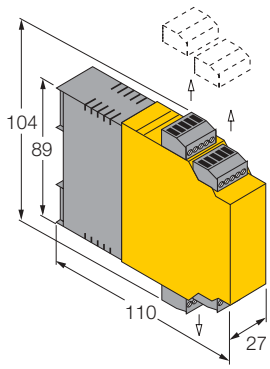

 Hans Turck GmbH & Co.KG • D–45466 Mülheim/Ruhr • Tel. 0208/4952-0 • Fax 0208/4952-264 • E-Mail: turckmh@mail.turck-globe.de • www.turck.com

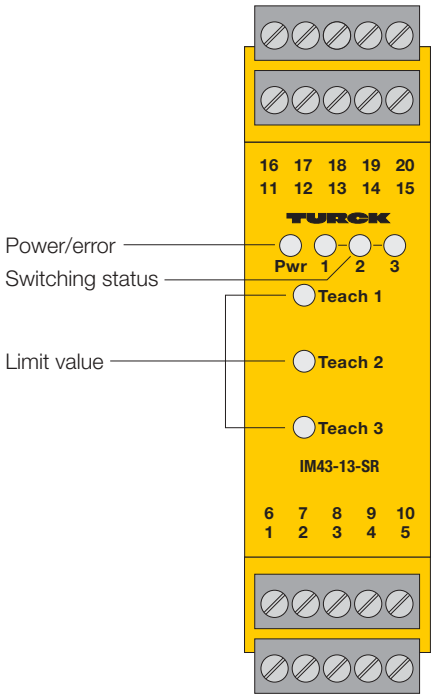

Limit value monitor
IM43-13-SR
IM43-14-SRi
1-channel

- **1-channel limit value monitor with removable terminal blocks**
- **Input either via current input 0/4...20 mA or voltage input 0/2...10 V**
- **Supply of a two-wire or 3-wire transmitter/sensor**
- **Limit value adjustment via Teach button**
- **Three relay outputs, each with one Normally open output**
- **Sealed relay with hard gold contacts**
- **Current output of 0/4...20 mA. (IM43-14-SRi only)**
- **Universal operating voltage (20...250 VUC)**

The limit value monitors IM43-13-SR and IM43-14-SRi are single-channel devices and alternatively monitor measuring currents of 0/4...20 mA or measuring voltages of 0/2...10 V.

The three limit values are set via the front panel teach button.

In addition, a voltage of approx. 18 V (at 35 mA max.) is provided, which can be used to power transmitters or sensors.

A green LED indicates that the device is powered. Three yellow LEDs indicate the switching status of the respective output.

The output mode is jumper programmable at terminals 5...8.

The type IM43-14-SRi is equipped with the following additional functions:

- For transfer to other devices there is a galvanically isolated analogue current output of 0/4...20 mA.
- The conversion of live-zero into dead-zero signals is determined by a jumper between terminals 5/9. In the live-zero mode the 4...20 mA range is monitored. Outside this range (< 3,6 mA or > 24 mA) an error indication is is output. In this case, the Power LED will illuminate red, the relays are de-energised and an error current of > 22 mA is output.
- If a faulty transmitter causes a short-circuit, the relays are de-energised and an error current of > 22 mA is output.

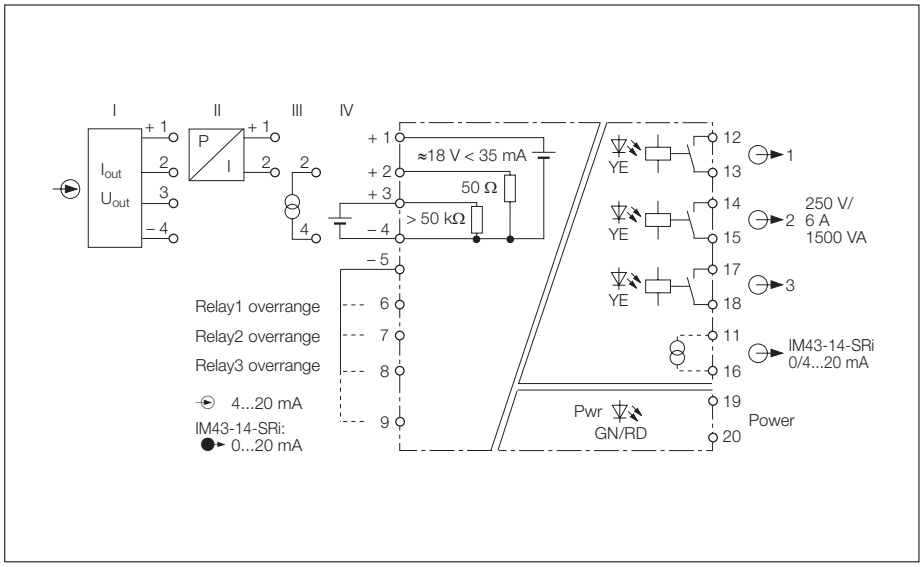

Limit Value Monitor IM43-13-SR/IM43-14-SRi

Type	IM43-13-SR	IM43-14-SRi
Ident-no.	7540041	7540043
Supply voltage U_B	20...250 VUC	20...250 VUC
Line frequency (AC)	40...70 Hz	40...70 Hz
Power consumption	≤ 4.8 W	≤ 4.8 W
Clearances and creepages		
Input circuit to output circuit	≥ 3 mm	≥ 3 mm
– Output circuit to supply	≥ 3 mm	≥ 3 mm
– Input circuit to supply	≥ 3 mm	≥ 3 mm
– Test voltage	2 kV	2 kV
Input circuit	current and voltage input	current and voltage input
Current input		
– Input resistance	< 50 Ω	< 50 Ω
– Operating values	0/4...20 mA (overload protected up to 24 mA)	0/4...20 mA (overload protected up to 24 mA)
Voltage input		
– Input resistance	> 50 kΩ	> 50 kΩ
– Operating values	0/2...10 V (overload protected up to 20 V)	0/2...10 V (overload protected up to 20 V)
– Hysteresis	5 %	5 %
Ambient temperature sensitivity	75 ppm/K	75 ppm/K
Output circuit		
Relay output	three relay outputs	three relay outputs
– Contact configuration	1 normally open contact	1 normally open contact
– Switching voltage	≤ 250 VAC	≤ 250 VAC
– Switching current	≤ 6 A	≤ 6 A
– Switching capacity	≤ 1500 VA	≤ 1500 VA
Current output	–	0/4...20 mA
LED indications		
– Power/error (2-colour LED)	Power ON: green – Error: red	Power ON: green – Error: red
– Switching status	yellow	yellow
Housing	20 poles, 27 mm wide, Polycarbonatet/ABS, flammability class V-0 per UL94	
Mounting	snap-on hat rail (DIN 50022) or panel screw mounting	
Connection	removable terminal blocks, polarity protected screw connection, self-lifting	
Connection profile	≤ 1 x 2.5 mm², 2 x 1.5 mm² or 2 x 1.0 mm² with wire sleeves	
Degree of protection (IEC 60529/EN 60529)	IP20	
Operating temperature	-25…+70 °C	

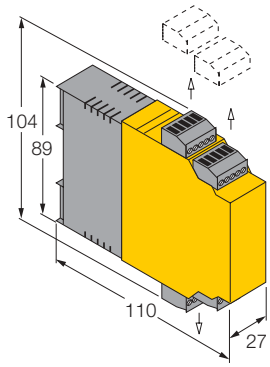

 Hans Turck GmbH & Co.KG • D–45466 Mülheim/Ruhr • Tel. 0208/4952-0 • Fax 0208/4952-264 • E-Mail: turckmh@mail.turck-globe.de • www.turck.com

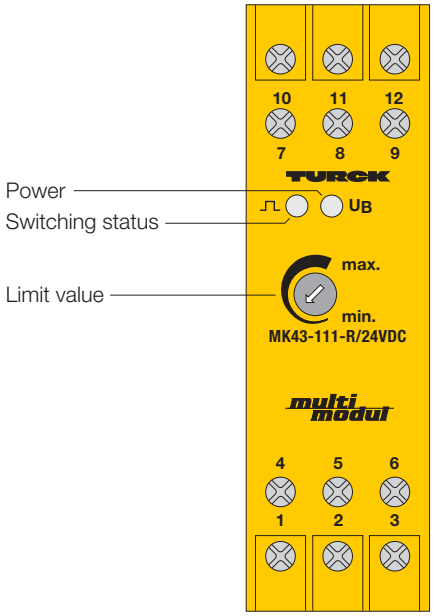

Setpoint Monitor
MK43-111-R/24VDC
MK43-111-R/230VAC
1-channel

- **1-channel setpoint monitor**
- **For use with either 0/4...20 mA current inputs or 0/2...10 V voltage inputs**
- **1 relay output with 1 SPDT contact**
- **Sealed relays with hard gold plated contacts**

The MK43-111-R setpoint device is used to monitor either 0/4...20 mA current signals or voltage signals from 0/2...10 V. The front panel potentiometer serves to set the limit value.

The monitoring mode depends on the configuration of terminals 2 and 5. Linking terminals 2 and 5 selects the overrange monitoring mode, i.e. the output relay de-energises, if the limit value is exceeded. Leaving terminals 2 and 5 open, selects the underrange monitoring mode, i.e. the output relay de-energises, if the preset limit value is underranged.

Devices with a 24 VDC power supply do not provide galvanic isolation between the inputs and the power supply.

A yellow LED indicates the switching status of the relay; a green LED indicates that the device is powered.

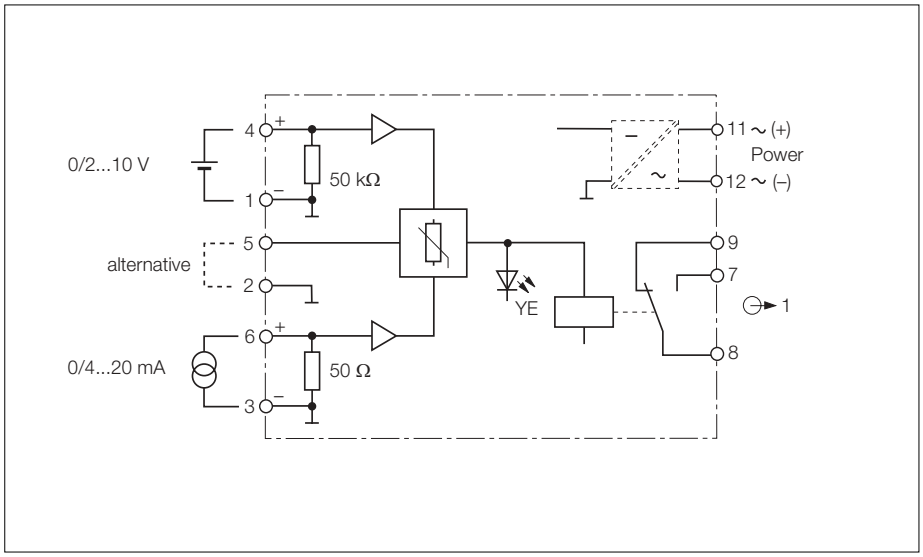

Setpoint Monitor MK43-111-R

Type	MK43-111-R/230VAC	MK43-111-R/24VDC
Ident-no.	7506900	7506907
Supply voltage U_B	184...253 VAC	19...29 VDC
Line frequency/ripple W_{PP}	48…62 Hz	≤ 10 %
Power consumption	≤ 2.5 VA	≤ 1 W
Clearances and creepage distances		
– Input circuit to output circuit	≥ 4 mm	≥ 4 mm
– Output circuit to supply voltage	≥ 4 mm	≥ 4 mm
– Input curcuit to supply voltage	≥ 4 mm	–
– Test voltage	2.5 kV	2.5 kV
Input circuits	voltage and current input (selectable)	voltage and current input (selectable)
Current input		
– Input resistance	50 Ω	50 Ω
– Operation characteristics	0…20 mA (max. 40 mA)	0…20 mA (max. 40 mA)
Voltage input		
– Input resistance	50 kΩ	50 kΩ
– Operation characteristics	0…10 V (max. 250 V)	0…10 V (max. 250 V)
Hysteresis	typ. 2.5 % of final value	typ. 2.5 % of final value
Temperature drift	≤ 2 % of final value	≤ 2 % of final value
Output circuits	1 relay output	1 relay output
Number of contacts	1 SPDT contact, silver-alloy + 3 µm Au	1 SPDT contact, silver-alloy + 3 µm Au
Switching voltage	250 V	250 V
Switching current	≤ 2 A	≤ 2 A
Switching capacity	≤ 500 VA/60 W	≤ 500 VA/60 W
LED indications		
– Power	green	green
– Switching status	yellow	yellow
Housing	12-pole, 27 mm wide, Polycarbonate/ABS flammability class V-0 per UL 94	
Mounting	snap-on clamps for top-hat rail (DIN 50022) or screw terminals for panel mounting	
Connection	via flat terminals with self-lifting pressure plates	
Connection profile	≤ 2 x 2.5 mm² or 2 x 1.5 mm² with wire sleeves	
Degree of protection (IEC 60529/EN 60529)	IP20	
Operating temperature	-25…+60 °C	

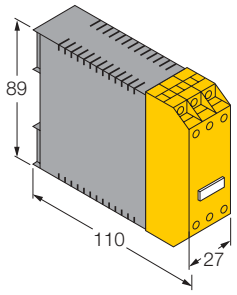

Hans Turck GmbH & Co.KG • D–45466 Mülheim/Ruhr • Tel. 0208/4952-0 • Fax 0208/4952-264 • E-Mail: turckmh@mail.turck-globe.de • www.turck.com

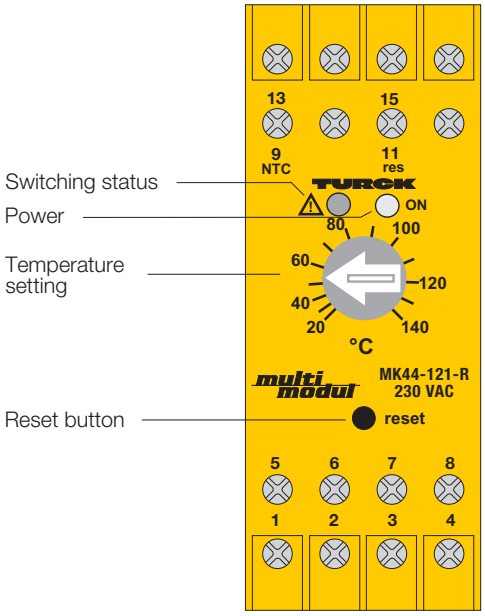

Thermistor Relay
MK44-121-R/24VUC
MK44-121-R/230VAC
1-channel

- **1-channel thermistor relay**
- **Evaluation of temperature changes in drives via NTC resistors**
- **Excellent temperature stability and repeatability**
- **Input circuit monitoring for short-circuit and wire-break**
- **Switch point adjustable in a range from 20...140 °C**
- **2 relay outputs, each with 1 SPDT contact**
- **Control switch connection for external acknowledgement**

The MK44-121-R thermistor relay is a temperature monitoring device designed to identify excessive temperatures in drives and bearings.

The temperature sensing element is a NTC resistor. The following measuring resistors manufactured by Siemens can be used
- S863/10K/G40
- S869/10K/G40.
- M703.

It is also possible to use other resistor types, provided they feature a similar temperature performance (25 °C - 10 kΩ, 140 °C - 235.2 Ω).

The sensing element M703 (see chapter "accessories", page 9 – 9) can be ordered directly from TURCK.

The temperature range is programmed via a potentiometer on the front of the device.

The switching status of the relays is signalled by a red LED. A green LED indicates that the device is powered. When the input signal reaches the adjusted setpoint, the output relays de-energise and latch.

The limit value indication can be acknowledged by pushing a reset button. It can also be reset by a potential free contact (terminals 11/15), or by turning the power off for at least 0.5 s.

If the temperature to be monitored falls below the preset value prior to an acknowledgement, the relays re-energise after the reset. If the fault continues after the reset, the relays stay de-energised. The device can also operate as a temperature control by permanently linking terminals 11/15.

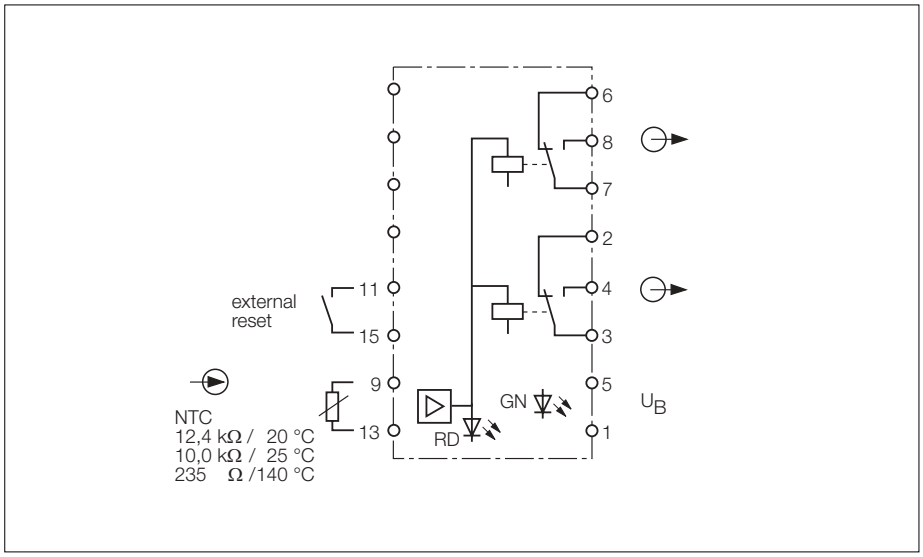

Thermistor Relay MK44-121-R

Type	MK44-121-R/230VAC	MK44-121-R/24VUC
Ident-no.	7506800	7506801
Supply voltage U_B	184...264 VAC	19...29 VUC
Line frequency/ripple W_{PP}	48…62 Hz	–
Power/current consumption	5 VA	≤ 100 mA
Galvanic isolaton	between input circuit, output circuit and supply voltage for 250 V_{rms}, test voltage 2.5 kV_{rms}	input circuit to output circuit for 250 $V_{rms,}$ test voltage 2.5 kV_{rms}
Input circuits		
Sensor input	NTC resistor	NTC resistor
– Input resistance	12.4 kΩ – 20 °C; 10 kΩ – 25 °C; 235.3 Ω – 140 °C	12.4 kΩ – 20 °C; 10 kΩ – 25 °C; 235.3 Ω – 140 °C
Wire-break threshold	R > 60 kΩ	R > 60 kΩ
Short-circuit threshold	R < 150 Ω	R < 150 Ω
Reset input	potential-free NO contact	potential-free NO contact
Hysteresis (from preset value)	1…10 %	1…10 %
Ambient temperature sensitivity	≤ 0.01 %/K	≤ 0.01 %/K
Output circuits	2 relay outputs	2 relay outputs
Contacts	1 SPDT contact, silver-alloy + 3 µm Au	1 SPDT contact, silver-alloy + 3 µm Au
Switching voltage	250 V	250 V
Switching current	≤ 2 A	≤ 2 A
Switching capacity	≤ 500 VA/60 W	≤ 500 VA/60 W
LED indications		
– Power	green	green
– Switching status	red	red
Housing	16-pole, 36 mm wide, Polycarbonate/ABS, flammability class V-0 per UL 94	
Mounting	snap-on clamps for top-hat rail (DIN 50022) or screw terminals for panel mounting	
Connection	via flat terminals with self-lifting pressure plates	
Connection profile	≤ 2 x 2.5 mm^2 or 2 x 1.5 mm^2 with wire sleeves	
Degree of protection (IEC 60529/EN 60529)	IP20	
Operating temperature	-25…+60 °C	

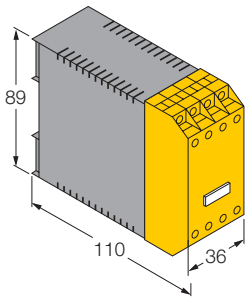

Pulse Counter/ Pulse Divider MS41-12Ex0-R 1-channel

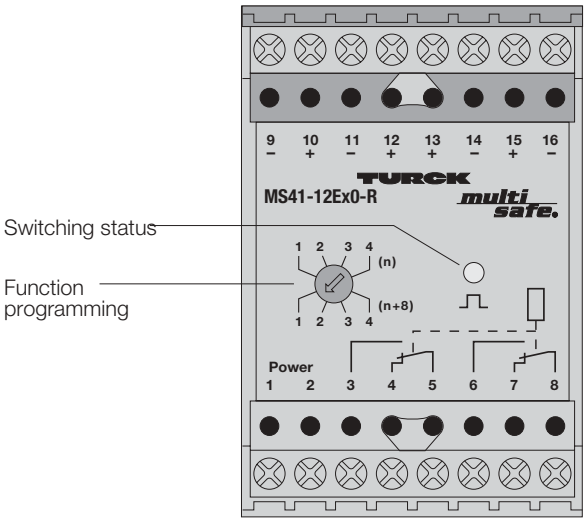

- **1-channel pulse counter/pulse divider**
- **Intrinsically safe input circuit EEx ia**
- **Area of application according to ATEX: II (1) GD, I (M1)**
- **Galvanic isolation between input circuit, output circuit and supply voltage**
- **1 relay output with 2 SPDT contacts**
- **Universal supply voltage (20...250 VAC/20...125 VDC)**

The MS41-12Ex0-R is a single channel device with an intrinsically safe input circuit. It is designed for counting and dividing of pulse sequences.

The input operates with sensors according to EN 60947-5-6 (NAMUR) or with mechanical contacts.

Changes in the input current, which correspond to the actuation of a NAMUR sensor or the opening of a contact in the input circuit, are evaluated as input pulses. A selector switch located on the front of the device provides a choice of the following relay output functions:

– Switch position 1: Pulse counter NO
– Switch position 2: Pulse counter NC
– Switch position 3: Pulse divider NO
– Switch position 4: Pulse divider NC

Jumpers P1, P2 and P4 at terminals 1...16 determine the number of input pulses (counts) needed to cause the relay output to switch (see table 1). If more than 7 input pulses are required, the selector switch of the logic controller (pulse counter/pulse divider) must be in the lower position (n + 8). If input pulses between 1 and 7 are needed, select the upper position (n).

When used as a pulse counter, the output relay changes state for one pulse duration if the pre-determined count is reached.

When used as a pulse divider, the output relay changes state for the entire preset pulse sequence (number of preset counts) if the number of preset input pulses has been reached (see table on page 4-4).

A yellow LED indicates the switching status of the relay.

The device's counter is reset to zero when power is applied to the device.

Program count "n"		P1 (11-12)	P2 (13-14)	P4 (15-16)
Switch position 1...4(n)	1	•		
	2		•	
	3	•	•	
	4			•
	5	•		•
	6		•	•
	7	•	•	•
Switch position 1...4(n+8)	8			
	9	•		
	10		•	
	11	•	•	
	12			•
	13	•		•
	14		•	•
	15	•	•	•

Tab. 1 Pulse count programming

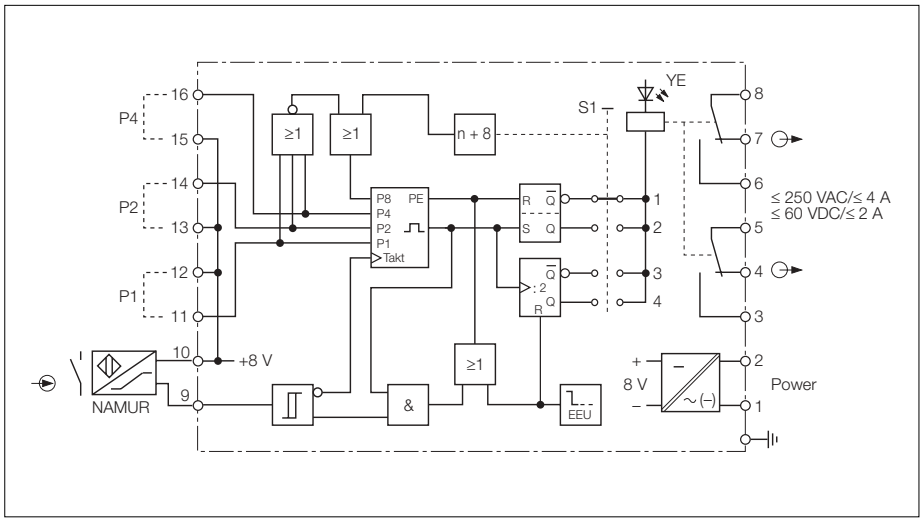

Pulse Counter/Pulse Divider MS41-12Ex0-R

Type	MS41-12Ex0-R
Ident-no.	5361101
Supply voltage U_B	20...250 VAC/20...125 VDC
Line frequency (AC)	40...70 Hz
Power consumption	≤ 3 W
Galvanic isolation	between input circuit, output circuit and supply voltage for 250 V_{rms} test voltage 2.5 kV_{rms}
Input circuits	according to EN 60947-5-6 (NAMUR), intrinsically safe according to EN 50020
Input voltage	8 V
Input current	8 mA
Switching threshold	1.55 mA
Hysteresis	0.2 mA
Input frequency	≤ 150 Hz
Output circuits	relay output
Number of contacts	2 SPDT contacts, silver-alloy + 3 µm Au
Switching voltage	≤ 250 VAC/60 VDC
Switching current	≤ 4 A
Switching capacity	≤ 1000 VA/60 W
Switching frequency	≤ 10 Hz
Ex-approval acc. to certificate of conformity	DMT 01 ATEX E 119
Maximum nominal values	
– No load voltage U_0	11.0 V
– Short-circuit current I_0	55 mA
– Power P_0	150 mW
– Safety voltage U_m	250 VAC/125VDC
Max. external inductances/capacitances L_0/C_0	
– [EEx ia] IIC	1 mH/500 nF
– [EEx ia] IIB	3 mH/2500 nF
– [EEx ia] I	10 mH/10 µF
Marking of device	II (1) GD [EEx ia] IIC I (M1) [EEx ia] I
LED indication	
– Switching status	yellow
Housing	50 mm wide, Polycarbonate/ABS
Mounting	panel mounting or snap-on clamps for top-hat rail (DIN 50022)
Connection	2 x 8 self-lifting pressure plates
Connection profile	≤ 2 x 2.5 mm² or 2 x 1.5 mm² with wire sleeves
Degree of protection (IEC 60529/EN 60529)	IP20
Operating temperature	-25…+60 °C

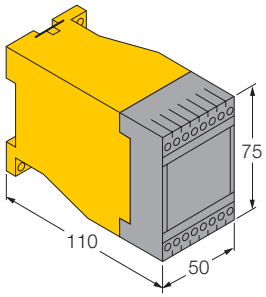

Output functions Switching position (n) or (n+8)	**Switching status in control circuit**	**Switching status in contact circuit**	
		N.O. mode	N.C. mode
Pulse counter 1: N.O. mode 2: N.C. mode	Input P2 jumpered and S1 in position n	ON energised OFF de-energised	OFF de-energised ON energised
Pulse scaler 3: N.O. mode 4: N.C. mode	Input P2 jumpered and S1 in position n	ON energised OFF de-energised	OFF de-energised ON energised

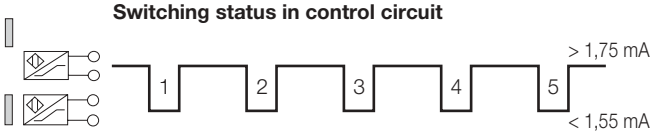

Fig.1 output function and switching status

Bistable Switching amplifier MS41-22Ex0-R 1-channel

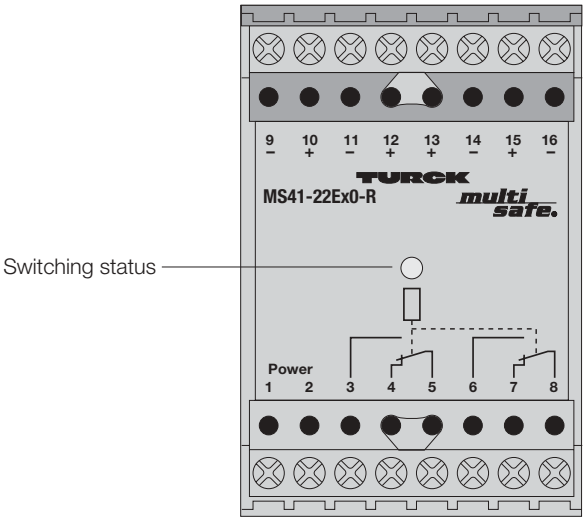

- **1-channel bistable switching amplifier**
- **Intrinsically safe input circuit EEx ia**
- **Area of application according to ATEX: II (1) GD, I (M1)**
- **Galvanic isolation between input circuit, output circuit and supply voltage**
- **1 output relay with 2 SPDT contacts**
- **For optional use as a switching amplifier without bistable characteristics**
- **Universal supply voltage (20...250 VAC/20...125 VDC)**

The bistable amplifier relay MS41-22Ex0-R is a single channel device with four intrinsically safe inputs. It can be used as a bistable relay, or as a programmable switching amplifier without bistable characteristics.

As a bistable relay, the switching performance can be programmed for "priority set" or "priority reset" functions.

By leaving the inputs open or closed, the desired function may be selected. Please refer to page 4-15 for further information on logic functions.

A yellow LED indicates the switching status of the relay.

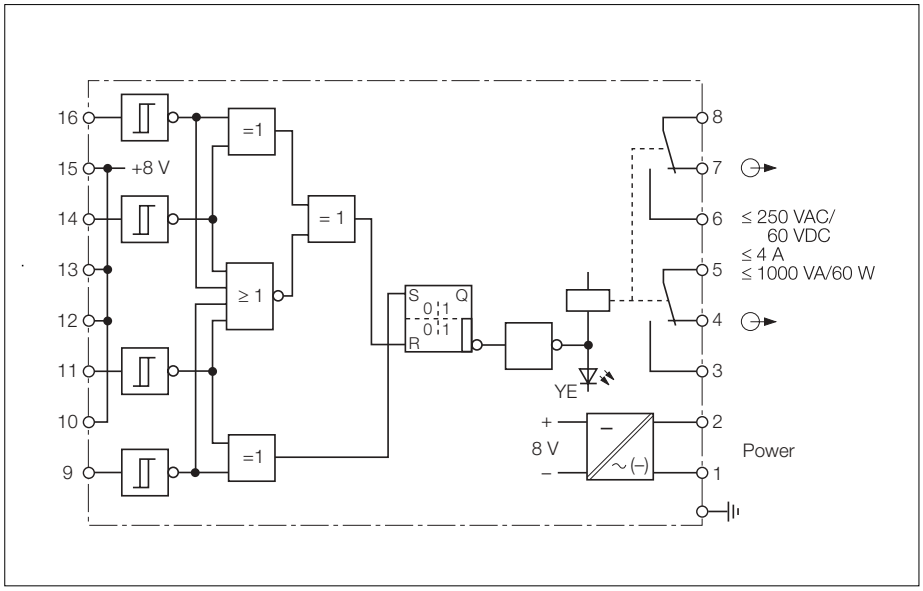

Bistable Switching Amplifier MS41-22Ex0-R

Type	MS41-22Ex0-R
Ident-no.	5363101
Supply voltage U_B	20...250 VAC/20...125 VDC
Line frequency (AC)	40...70 Hz
Power consumption	≤ 3 W
Galvanic isolation	between input circuit, output circuit and supply voltage for 250 V_{rms} test voltage 2.5 kV_{rms}
Input circuits	according to EN 60947-5-6 (NAMUR), intrinsically safe according to EN 50020
Operation characteristics	
– Voltage	8 V
– Current	4.5 mA
Switching threshold	1.55 mA
Hysteresis	0.2 mA
Output circuits	relay output
Number of contacts	2 SPDT contacts, silver-alloy + 3 µm Au
Switching voltage	≤ 250 VAC/60 VDC
Switching current	≤ 4 A
Switching capacity	≤ 1000 VA/60 W
Switching frequency	≤ 10 Hz
Ex-approval acc. to certificate of conformity	DMT 01 ATEX E 119
Maximum nominal values	
– No load voltage U_0	11.0 V
– Short-circuit current I_0	55 mA
– Power P_0	150 mW
– Safety voltage U_m	250 VAC/125VDC
Max. external inductances/capacitances L_0/C_0	
– [EEx ia] IIC	1 mH/500 nF
– [EEx ia] IIB	3 mH/2500 nF
– [EEx ia] I	10 mH/10 µF
Marking of device	II (1) GD [EEx ia] IIC I (M1) [EEx ia] I
LED indication	
– Switching status	yellow
Housing	50 mm wide, Polycarbonate/ABS
Mounting	panel mounting or snap-on clamps for top-hat rail (DIN 50022)
Connection	2 x 8 self-lifting pressure plates
Connection profile	≤ 2 x 2.5 mm^2 or 2 x 1.5 mm^2 with wire sleeves
Degree of protection (IEC 60529/EN 60529)	IP20
Operating temperature	-25…+60 °C

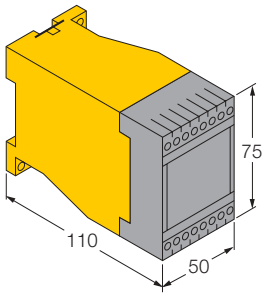

Bistable Switching Amplifiers MS41-22Ex0-R 1-channel

Switching amplifier functionality

When using the MS41-22Ex0-R as an amplifier, the bistable relays fulfil the function of a monostable switching amplifier. The output function (NO or NC operation) is programmed by the position of the jumpers and the input configuration.

Note: When mechanical contacts are used as input devices, the output function is reversed from those shown on the right.

NO mode

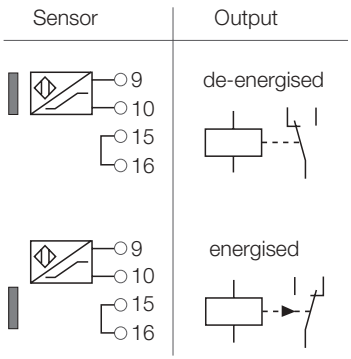

NC mode

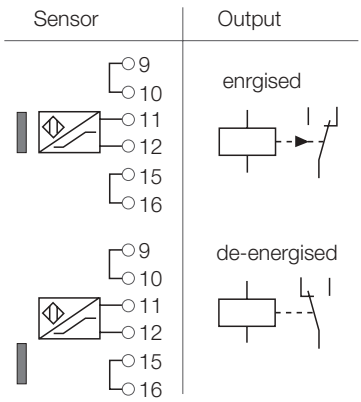

Bistable functionality

If the amplifier is used as a bistable relay, the following module functions are available depending on the input configuration:

- Set input with priority: Any time two inputs are activated simultaneously, the set input has priority.
- Reset input with priority: Any time two inputs are activated simultaneously, the reset input has priority.
- Switching upon detection of target: Attenuation initiates the switching function as shown by (a) on the right.
- Switching function with no target present. A switching function occurs whenever no target is present as shown by (b) on the right.

Priority Set

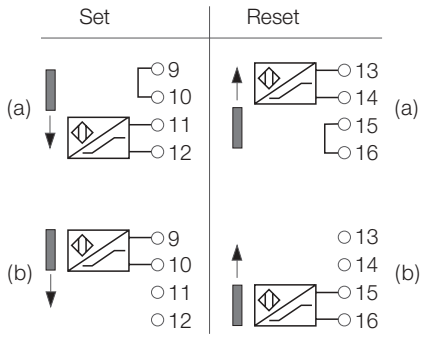

Priority Reset

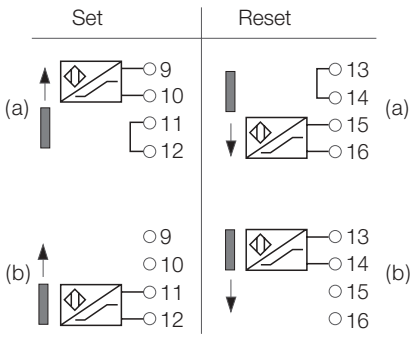

Note: When mechanical contacts are used, the switching function is reversed.

 Hans Turck GmbH & Co.KG • D–45466 Mülheim/Ruhr • Tel. 0208/4952-0 • Fax 0208/4952-264 • E-Mail: turckmh@mail.turck-globe.de • www.turck.com

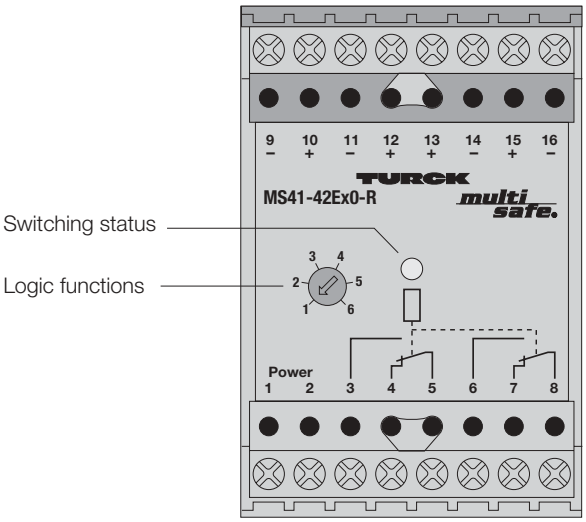

Amplifier Relays with Logic Functions MS41-42Ex0-R 1-channel

- **1-channel amplifier relay**
- **Intrinsically safe input circuit EEx ia**
- **Area of application according to ATEX: II (1) GD, I (M1)**
- **Galvanic isolation between input circuit, output circuit and supply voltage**
- **1 relay output with 2 SPDT contacts**
- **Universal supply voltage (20...250 VAC/20...125 VDC)**

The MS41-42Ex0-R logic amplifier relay has four intrinsically safe inputs which can be combined logically with each other. The device has a relay output with two SPDT contacts. The input circuit accepts NAMUR sensors (EN 60947-5-6) or mechanical contacts.

A switch on the front panel serves to adjust the following six logic functions:

1 AND
2 NAND
3 OR
4 NOR
5 IDENTITY
6 NON-IDENTITY

A detailed description of the logic functions is shown on page 4 – 19.

For applications requiring less than four inputs, please observe the following:

– the unused inputs should be left open when selector positions 1 and 2 (AND/NAND functions) are used.

– the unused inputs should be jumpered when selector positions 3 and 4 (OR/NOR functions) are used.

The IDENTITY and NON-IDENTITY functions (selector positions 5 and 6) can only be attained with four input sources.

A yellow LED indicates the switching status of the relay.

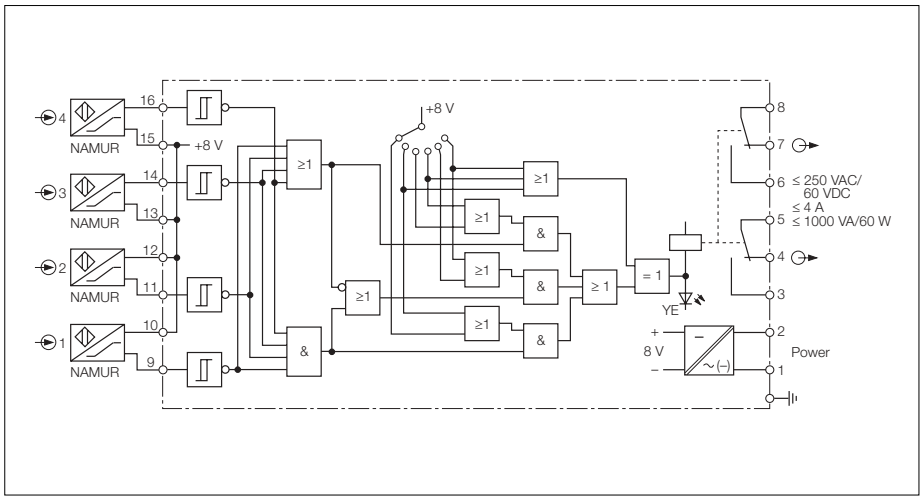

Amplifier Relay with Logic Functions MS41-42Ex0-R

Type	MS41-42Ex0-R
Ident-no.	5365701
Supply voltage U_B	20...250 VAC/20...125 VDC
Line frequency (AC)	40...70 Hz
Power consumption	≤ 3 W
Galvanic isolation	between input circuit, output circuit and supply voltage for 250 V_{rms} test voltage 2.5 kV_{rms}
Input circuits	according to EN 60947-5-6 (NAMUR), intrinsically safe according to EN 50020
Operation characteristics	
– Voltage	8 V
– Current	4.5 mA
Switching threshold	1.55 mA
Hysteresis	0.2 mA
Output circuits	relay output
Number of contacts	2 SPDT contacts, silver-alloy + 3 µm Au
Switching voltage	≤ 250 VAC/60 VDC
Switching current	≤ 4 A
Switching capacity	≤ 1000 VA/60 W
Switching frequency	≤ 10 Hz
Ex-approval acc. to certificate of conformity	DMT 01 ATEX E 119
Maximum nominal values	
– No load voltage U_0	11.0 V
– Short-circuit current I_0	55 mA
– Power P_0	150 mW
– Safety voltage U_m	250 VAC/125VDC
Max. external inductances/capacitances L_0/C_0	
– [EEx ia] IIC	1 mH/500 nF
– [EEx ia] IIB	3 mH/2500 nF
– [EEx ia] I	10 mH/10 µF
Marking of device	II (1) GD [EEx ia] IIC I (M1) [EEx ia] I
LED indication	
– Switching status	yellow
Housing	50 mm wide, Polycarbonate/ABS
Mounting	panel mounting or snap-on clamps for top-hat rail (DIN 50022)
Connection	2 x 8 self-lifting pressure plates
Connection profile	≤ 2 x 2.5 mm² or 2 x 1.5 mm² with wire sleeves
Degree of protection (IEC 60529/EN 60529)	IP20
Operating temperature	-25…+60 °C

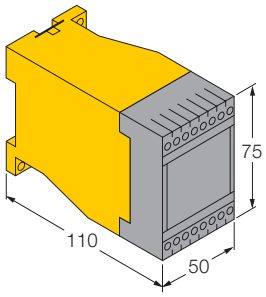

Amplifier Relay with Logic Functions MS41-42Ex0-R 1-channel

1 AND		2 NAND		3 OR		4 NOR		5 IDENTITY		6 NON-IDENTITY	
Sensor	Output	Sensor	Output	Sensor	Output	Sensor	Output	Sensor	Output	Sensor	Output
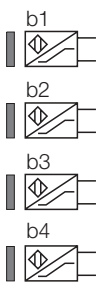		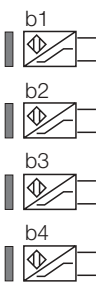	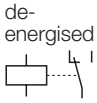	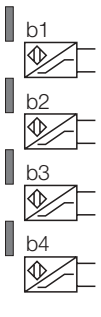	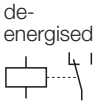	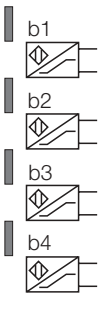		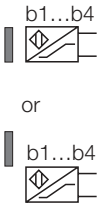		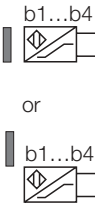	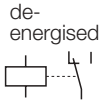
The output relay will energise when all four sensors detect a target. If one or more sensors do not detect a target, the output relay will de-energise.		The output relay will de-energise when all four sensors detect a target. If one or more sensors do not detect a target, the output relay will energise.		The output relay will be energised when one or more sensors detect a target. If all four sensors do not detect a target, the output relay will de-energise.		The output relay will de-energise when one or more sensors detect a target. If all four sensors do not detect a target, the output relay will energise.		The output relay will be energised when all four sensors detect or do not detect a target. If the input conditions differ, the output relay will de-energise.		The output relay will de-energise when all four sensors detect or do not detect a target. If the input conditions differ, the output relay will energise.	

4

 Hans Turck GmbH & Co.KG • D–45466 Mülheim/Ruhr • Tel. 0208/4952-0 • Fax 0208/4952-264 • E-Mail: turckmh@mail.turck-globe.de • www.turck.com

Setpoint Monitor
MS43-R
1-channel

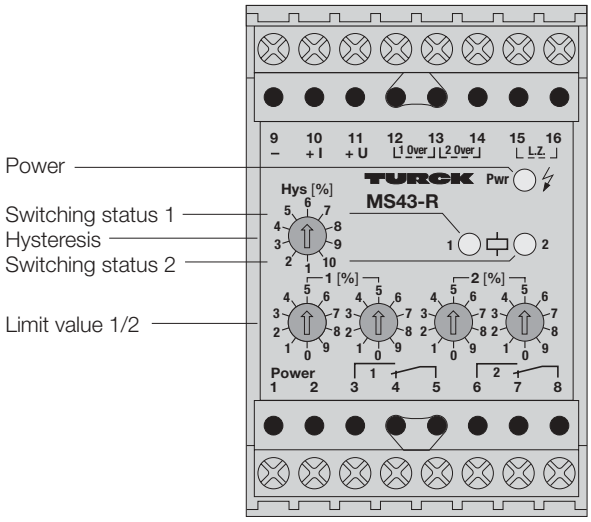

- **1-channel setpoint monitor**
- **For use with either 0/4...20 mA current inputs or 0/2...10 V voltage inputs**
- **Excellent temperature stability and repeatability**
- **Input circuit monitoring for wire-break and short-circuit conditions in live-zero mode**
- **2 switch points 1…100 %**
- **Adjustable hysteresis from 1…10 %**
- **2 relay outputs, each with 1 SPDT contact**
- **Sealed relays with hard gold plated contacts**
- **Universal supply voltage (20...250 VUC)**

The MS43-R setpoint relay is used with analogue sensors or devices such as level monitors, flow meters, position encoders, pressure transmitters, frequency and current converters. The input accommodates either 0/4...20 mA current signals, or voltage signals from 0/2...10 V.

2-wire (III) or 3-wire sensors (IV) with a current consumption of 30 mA may be powered directly by the MS43-R.
For this purpose, a constant voltage of 15 V is provided by terminals 15/16.

The measuring range is converted from 0...20 mA to 4...20 mA, or from 0...10 V to 2...10 V by jumpering terminals 15 and 16. With this setting (live-zero mode), the input is monitored for short-circuit and wire-break conditions. When the input signal exceeds 22 mA or 11 V, or falls below 2.0 mA or 1.0 V, both output relays change state and the dual colour „Power“ LED changes from green to red.

Two rotary switches located on the front of the device allow setting of two independent setpoints between 1 % and 100 % of the defined range. If the input signal reaches one of the defined setpoints, the respective output relay changes state. Two yellow LEDs indicate the switching status of the relays.

The switching hysteresis of both setpoints can be adjusted between 1 % and 10 % of the setpoint by a rotary switch.

The monitoring mode of both setpoints can be programmed separately by jumpering terminals 12 and 13 (setpoint 1) or 13 and 14 (setpoint 2).

Without jumpers:
the relay de-energises if the input signal drops below the setpoint.

With jumpers:
the relay de-energises if the input signal exceeds the setpoint.

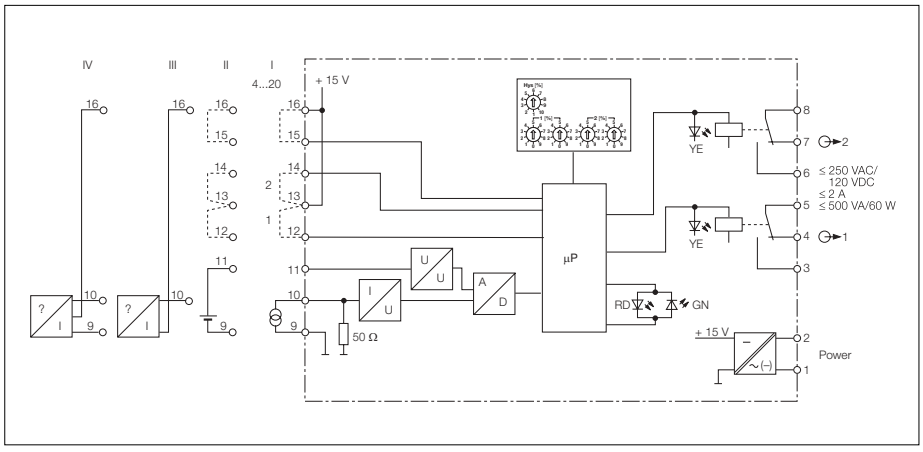

4

Setpoint Monitor MS43-R

Type	MS43-R
Ident-no.	0507012
Supply voltage U_B	20...250 VUC
Line frequency (AC)	40...70 Hz
Power consumption	≤ 3 W
Galvanic isolation	between input circuit, output circuit and supply voltage for 250 V_{rms} test voltage 2.5 kV_{rms}
Clearances and creepage distances	
– Input circuit to output circuit	≥ 4 mm
– Input circuit to power supply	≥ 4 mm
Input circuits	voltage and current input (selectable)
Current input	
– Input resistance	50 Ω
– Operation characteristics	0/4…20 mA (max. 50 mA)
– Range preset (two setpoints)	0.2…20 mA (max. 50 mA)
Voltage input	
– Input resistance	48 kΩ
– Operation characteristics	0/2…10 V
– Range preset (two setpoints)	0.1…10 V
Hysteresis (from adjusted preset)	1…10 %
Temperature drift	≤ 0.01 %/K
Output circuits	2 relay outputs
Number of contacts	1 SPDT contact, silver-alloy + 3 µm Au
Switching voltage	250 V
Switching current	≤ 2 A
Switching capacity	≤ 500 VA/60 W
LED indications	
– Power/fault indication	green/red (2-colour LED)
– Switching status	2 x yellow
Housing	50 mm wide, Polycarbonate/ABS
Mounting	panel mounting or snap-on clamps for top-hat rail (DIN 50022)
Connection	2 x 8 self-lifting pressure plates
Connection profile	≤ 2 x 2.5 mm^2 or 2 x 1.5 mm^2 with wire sleeves
Degree of protection (IEC 60529/EN 60529)	IP20
Operating temperature	-25…+60 °C

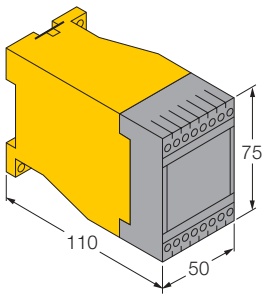

VALVE CONTROL MODULES

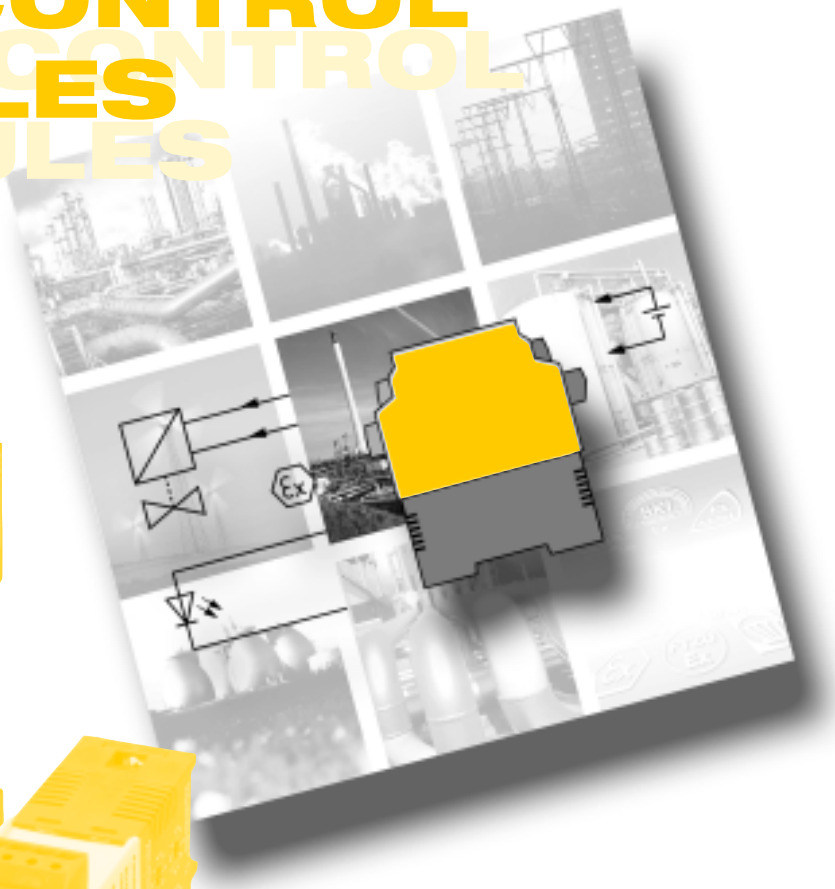

Valve Control Modules Selection Guide

Housing Style *multimodul multicart®*

Type / Housing	MK72-S01-Ex	MK72-S02-Ex	MK72-S03-Ex	MK72-S04-Ex	MK72-S05-Ex	MK72-S06-Ex	MK72-S07-Ex	MK72-S08-Ex
	multi modul							
Functions								
Valve control	•	•	•	•	•	•	•	•
Galvanic isolation								
Input to output circuits	•	•	•	•	•	•	•	•
Input circuits to power supply	•	•	•	•	•	•	•	•
Output circuits to power supply	•	•	•	•	•	•	•	•
Power supply								
With auxiliary power	•	•	•	•	•	•	•	•
Without auxiliary power	•	•	•	•	•	•	•	•
Activation								
Input circuit	•	•	•	•	•	•	•	•
Control input	•	•	•	•	•	•	•	•
Output circuits								
Intrinsically safe acc. to EN 50020/14	•	•	•	•	•	•	•	•
[EEx ib] IIC	•	•	•	•	•	•	•	•
[EEx ia] IIC/IIB								
Output voltages								
see data sheet								
Output current								
see data sheet								
Supply voltage 24 VDC	•	•	•	•	•	•	•	•
Data sheet – see page	10	10	11	11	12	12	13	13

Hans Turck GmbH & Co.KG • D–45466 Mülheim/Ruhr • Tel. 0208/4952-0 • Fax 0208/4952-264 • E-Mail: turckmh@mail.turck-globe.de • www.turck.com

multi modul														multi cart®			
MK72-S09-Ex0	MK72-S10-Ex0	MK72-S11-Ex0	MK72-S12-Ex0	MK72-S13-Ex0	MK72-S14-Ex0	MK72-S15-Ex0	MK72-S16-Ex0	MK72-S17-Ex0	MK72-S18-Ex0	MK72-S19-Ex0	MK72-S20-Ex0	MK72-S21-Ex0	MK72-S22-Ex0	MC72-41Ex-T	MC72-42Ex-T	MC72-43Ex-T	MC72-44Ex-T
•	•	•	•	•	•	•	•	•	•	•	•	•	•	•			
•	•	•	•	•	•	•	•	•	•	•	•	•	•	•	•	•	•
•	•	•	•	•	•	•	•	•	•	•	•	•	•	•	•		
•	•	•	•	•	•	•	•	•	•	•	•	•	•	•	•		
														•	•		
																•	•
																•	•
														•	•		
•	•	•	•	•	•	•	•	•	•	•	•	•	•	•	•	•	•
•	•	•	•	•	•	•	•	•	•	•	•	•	•	•	•	•	•
•	•	•	•	•	•	•	•	•	•	•	•	•	•				
•	•	•	•	•	•	•	•	•	•	•	•	•	•	•	•	•	•
15	18	18	19	19	20	20	21	21	22	22	23	23	24	catalogue *multicart®*			

5

Valve Control Modules

Interface devices with intrinsically safe output circuits

Interface devices with intrinsically safe outputs are of great importance in the field of valve control. Each output provides an isolated supply voltage with limited voltage and current ranges for intrinsically safe applications.

These devices are typically used in valve control applications, but also to provide power to transmitters, pilot lights, and indicator displays in the hazardous area.

Valve control modules or solenoid drivers are offered with a variety of output data to meet a wide range of applications. There are several parameters to consider when selecting the components. It is important to make sure that the operating data and maximum values meet the requirements set forth in the conformity certificate.
The following example explains this further.

Parameters of the valve control module:
U_N = 12 VDC; I_N = 45 mA
U_0 = 14.5 V; I_0 = 108 mA; P_0 = 1.3 W

Parameters of the valve:
U_N = 12 VDC; I_N = 6.74 mA (1780 Ω)
U_i = 27 V; I_i = 125 mA; P_i = 0.4 W

Although the operating data of the two components given in this example are compatible with the open circuit voltage U_0 and the short-circuit current I_K, a connection between the two components is nevertheless not possible because of the power ratings of the valve. In the next example, a combination is possible without any power limits because of the different data:

Parameters of the valve control module:
U_N = 24 VDC; I_N = 25 mA
U_0 = 27 V; I_0 = 79 mA; P_0 = 1.5 W

Parameters of the valve:
U_N = 24 VDC; I_N = 6 mA (4000 Ω)
U_i = 32 V; I_i = 90 mA; P_i = 0.4 W oder
U_i = 28 V; I_i =115 mA; P= not specified

The following values must be considered when calculating the maximum allowed cable lengths for hazardous area circuits:

- minimum operating voltage of the valve
- voltage drop on the cable
- maximum external inductances and capacitances of the valve control module

Load control and power requirements

Valve control modules are available with and without auxiliary power for a wide spectrum of applications.
In valve controls with auxiliary power, the supply voltage is permanently applied to the module and the switching operation is triggered via a control input. This makes them ideal for PLC control, because the input circuit does not have to provide all the energy needed.

In valve controls without auxiliary power, the energy required must be provided by the control signal. In some cases, it might be necessary to provide outputs with a higher power rating to meet the energy requirements of the PLC.

Capacitors in the input and output circuits of the solenoid drivers (valve control modules) transfer power by removing and adding it, so that the switching frequency in devices without auxiliary energy drops down to a few Hz.

Applications and connection

The following pages provide a selection of magnetic valves and matching valve control modules, featuring DIN hat-rail mounting or 19" Eurocard technology.

The cable lengths calculated for the respective explosion categories are based on the assumed capacitances and inductances of 110 nF/km and 1mH/km (BASEFAA-Newsletter No. 3).

The max. line resistance is based on the typical output curve of the valve control module. The possible voltage drop on the cable can be determined by the minimum voltage and current ratings of the magnetic valve. A value pair is obtained by this calculation. Generally, the shorter length should be selected.

The user should always ensure that the technical data of the cable match the specific application requirements.

For valves, which are not mentioned on the following pages, please contact your local sales-office.

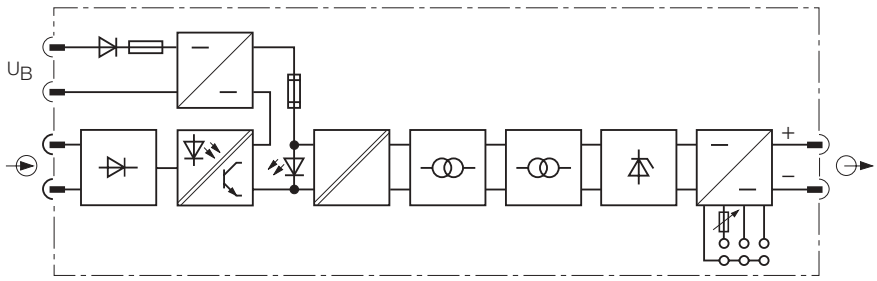

Fig. 2 Valve control module with auxiliary energy and adjustable output voltage

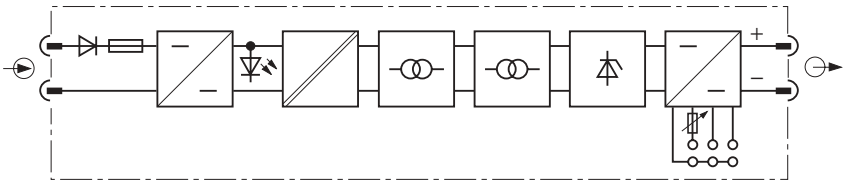

Fig. 3 Valve control module without auxiliary energy and adjustable output voltage

Valve Control Modules
Selection Guide

Housing	multi modul						
Type	MK72-S01	MK72-S02	MK72-S04	MK72-S05	MK72-S06	MK72-S07	MK72-S08
Herion solenoid valves EEx ib-IIB	3300 m	1100 m	5000 m	4000 m	3200 m	3000 m	2600 m
Herion solenoid valves EEx ib-IIC	1000 m	–	1400 m	900 m	600 m	550 m	400 m

Valve type	U_{min} / V	I_{min} / mA							
2030	6.4	43	130 Ω	–	153 Ω	200 Ω	–	–	–
2031	7.3	38	192 Ω	–	150 Ω	200 Ω	–	–	–
2032	8.2	34	241 Ω	–	140 Ω	240 Ω	270 Ω	–	–
2033	9	30	100 Ω	–	130 Ω	200 Ω	280 Ω	330 Ω	–
2034	10	27	–	–	110 Ω	185 Ω	275 Ω	330 Ω	–
2035	11.5	25	–	–	–	140 Ω	240 Ω	300 Ω	–
2036	13	23	–	–	–	–	195 Ω	220 Ω	347 Ω
2037	14.4	21	–	457 Ω	–	–	145 Ω	160 Ω	310 Ω
2038	15.9	19	–	426 Ω	–	–	–	–	265 Ω
2080*	5	1	7000 Ω	21000 Ω	8000 Ω	10000 Ω	12500 Ω	14000 Ω	16000 Ω
2081*	10	2.7	–	4300 Ω	1100 Ω	1800 Ω	2700 Ω	3300 Ω	4000 Ω
2084*	4	1.6	5000 Ω	12500 Ω	5600 Ω	6800 Ω	8400 Ω	9300 Ω	10600 Ω
Housing			***multimodul***						

* The values of the bus valves are arithmetic resistance values.

5

Housing	multi cart®			
Type	MC72-41Ex-T	MC72-42Ex-T	MC72-43Ex-T	MC72-44Ex-T
Herion solenoid valves EEx ib-IIB	1000 m	1000 m	1000 m	1000 m
Herion solenoid valves EEx ib-IIC	1000 m	270 m	1000 m	270 m

Valve type	U_{min} / V	I_{min} / mA				
2030	6.4	43	X	–	X	–
2031	7.3	38	X	–	X	–
2032	8.2	34	X	–	X	–
2033	9	30	X	–	X	–
2034	10	27	X	–	X	–
2035	11.5	25	X	–	X	–
2036	13	23	–	–	X	X
2037	14.4	21	–	X		X
2038	15.9	19	–	X		X
2080	5	1	X	X	X	X
2081	10	2.7	X	X	X	X
2084	4	1.6	X	X	X	X
Housing			***multicart®***			

"X" stands for a "suitable combination"; the specified minimum output voltage of the valve control module comprises the total voltage drop of the cable plus the minimum starting voltage of the magnetic valve.

Valve Control Modules
Selection Guide

			Housing: multi modul		multi cart®	
		Type	MK72-S02	MK72-S03	MC72-42Ex-T	MC72-44Ex-T
Hörbiger piezo-valves	EEx ib-IIB		1100 m	7000 m	1000 m	1000 m
	EEx ib-IIC		–	3600 m	270 m	270 m
Valve type	U_{min} / V	I_{min} / mA				
P8 381...NG-SN	6	2	–	1 kΩ	X	X
P8 381...NG-SE	21.5	1.6	1.5 kΩ	–	X	X
P8 381...NG-CN	6	2	–	1 kΩ	X	X
P8 381...NG-CE	21.5	1.6	1.5 kΩ	–	X	X
S9...-N	6	2	–	1 kΩ	X	X
S9...-E	21.5	1.6	1.5 kΩ	–	X	X
S20...-N	6	2	–	1 kΩ	X	X
S20...-E	21.5	1.6	1.5 kΩ	–	X	X
Housing			***multimodul***		***multicart®***	

			Housing: multi cart®	
		Type	MC72-41Ex-T	MC72-43Ex-T
Bürkert solenoid valves	EEx ib-IIB		1000 m	1000 m
	EEx ib-IIC		1000 m	1000 m
Valve type	U_{min} / V	I_{min} / mA		
6106	10.8	30	X	X
450	10.8	30	X	X
5470	10.8	30	X	X
6516	10.8	30	X	X
6517	10.8	30	X	X
6519	9.9	30	X	X
6104	10.8	30	X	X
6510	10.8	30	X	X
6511	10.8	30	X	X
Housing			***multicart®***	

"X" stands for a "suitable combination"; the specified minimum output voltage of the valve control module comprises the total voltage drop of the cable plus the minimum starting voltage of the magnetic valve.

Valve Control Modules
Selection Guide

Samsomatic solenoid valves			Housing: multi modul						
		Type	MK72-S01	MK72-S02	MK72-S04	MK72-S05	MK72-S06	MK72-S07	MK72-S08
	EEx ib-IIB		3300 m	1100 m	7000 m	5000 m	4000 m	3200 m	3000 m
	EEx ib-IIC		1000 m	–	3600 m	1400 m	900 m	600 m	550 m
Valve type	U_{min} / V	I_{min} / mA							
3701-41	5.6	10.7	–	–	–	1400 Ω	–	600 Ω	–
3701-42	11.9	5.3	–	–	220 Ω	–	–	–	–
3701-43	18.6	3.75	–	1400 Ω	–	–	–	–	–
3701-44	3.6	18.2	–	8500 Ω	–	–	–	–	–
3701-47	7	2	2500 Ω	–	500 Ω (1 V)	3000 Ω	4000 Ω	5250 Ω	6000 Ω
3963-11	5.6	10.6	–	–	220 Ω	–	–	–	–
3963-12	12	5.3	–	–	–	–	560 Ω	1030 Ω	–
3963-13	18.6	3.7	–	1400 Ω	–	–	–	–	–
3963-14	3.7	18.2	–	–	240 Ω	–	–	750 Ω	–
3963-17	7	2	2500 Ω	8500 Ω	500 Ω (1 V)	3000 Ω	4000 Ω	5250 Ω	6000 Ω
3962-11	5.6	10.6	–	–	220 Ω	–	–	–	–
3962-12	12	5.3	–	–	–	–	560 Ω	1030 Ω	–
3962-13	18.6	3.7	–	1400 Ω	–	–	–	–	–
3962-14	3.7	18.2	–	–	240 Ω	–	–	750 Ω	–
3962-17	7	2	2500 Ω	8500 Ω	500 Ω (1 V)	3000 Ω	4000 Ω	5250 Ω	6000 Ω
1079-22/6 V	5	1.43	4600 Ω	13000 Ω	1800 Ω	5300 Ω	6700 Ω	8400 Ω	9500 Ω
1079-22/12 V	10	1.43	1600 Ω	10000 Ω	–	2300 Ω	3700 Ω	–	6500 Ω
1079-22/24 V	18	1.43	–	4100 Ω	–	–	–	–	–
Housing			***multimodul***						

5

Valve Control Modules
Selection Guide

Samsomatic solenoid valves			MC72-41Ex-T	MC72-42Ex-T	MC72-43Ex-T	MC72-44Ex-T
	EEx ib-IIB		1000 m	1000 m	1000 m	1000 m
	EEx ib-IIC		1000 m	270 m	1000 m	270 m
Valve type	U_{min} / V	I_{min} / mA				
3701-41	5.6	10.7	X	X	X	X
3701-42	11.9	5.3	X	X	X	X
3701-43	18.6	3.75	–	–	–	–
3701-44	3.6	18.2	–	–	-	–
3701-47	7	2	X	X	X	X
3963-11	5.6	10.6	X	X	X	X
3963-12	12	5.3	X	x	X	X
3963-13	18.6	3.7	–	X	–	X
3963-14	3.7	18.2	–	–	–	–
3963-17	7	2	X	X	X	X
3962-11	5.6	10.6	X	X	X	X
3962-12	12	5.3	X	X	X	X
3962-13	18.6	3.7	–	X	–	–
3962-14	3.7	18.2	–	–	–	–
3962-17	7	2	X	X	X	X
1079-22/6 V	5	1.43	X	X	X	X
1079-22/12 V	10	1.43	X	X	X	X
1079-22/24 V	18	1.43		X		X
Housing			***multicart®***			

"X" stands for a "suitable combination"; the specified minimum output voltage of the valve control module comprises the total voltage drop of the cable plus the minimum starting voltage of the magnetic valve.

Hans Turck GmbH & Co.KG • D–45466 Mülheim/Ruhr • Tel. 0208/4952-0 • Fax 0208/4952-264 • E-Mail: turckmh@mail.turck-globe.de • www.turck.com

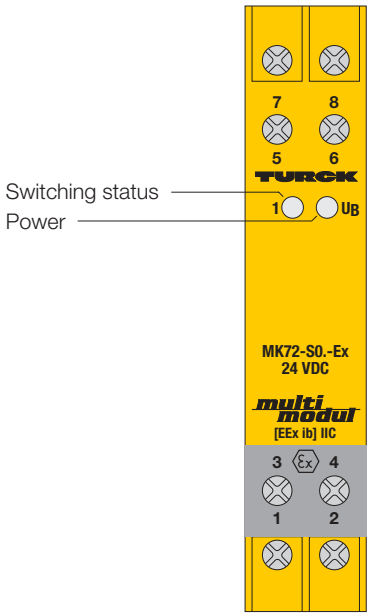

Solenoid Drivers MK72-S01...08-Ex/24VDC 1-channel

- **1-channel solenoid drivers**
- **Intrinsically safe output circuits EEx ib**
- **Area of application according to ATEX: II (2) G**
- **Input voltage 24 VDC**
- **Galvanic isolation between input circuit and output circuit**

The solenoid drivers series MK72 provide an intrinsically safe output with limited current and voltage. They can be directly connected to loads installed in explosion hazardous areas.

Typical applications are:
– driving of EExi pilot valves
– display supply
– transmitter supply

The output voltages of the MK72-S01 and the MK72-S02 can be converted from 12 to 6 VDC or from 24 to 15 VDC by linking terminals 3 and 4.
The other devices provide fixed output voltages.

Connected loads can be driven in two different ways:

(I) By applying power: jumper terminals 5 and 6. In this operating mode the switching frequency is limited to 25 Hz.

(II) With permanent voltage supply via the input circuit: use either an isolated contact between terminals 5 and 6 or apply input voltage to terminal 5. Due to the minimal current requirement and the large voltage range, even PLC outputs with low power or large voltage drops can be used for drive purposes. In this operating mode the highest switching frequency of 250 Hz is reached.

A yellow LED indicates the switching status of the relay; a green LED indicates that the device is powered.

5

MK72-S01-Ex
MK72-S02-Ex

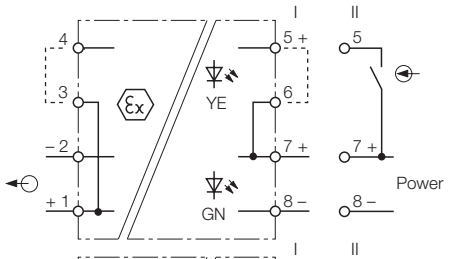

MK72-S03-Ex
MK72-S04-Ex
MK72-S05-Ex
MK72-S06-Ex
MK72-S07-Ex
MK72-S08-Ex

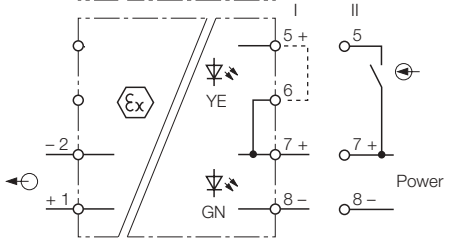

Solenoid Drivers MK72-S01...08-Ex

Type	MK72-S01-Ex	MK72-S02-Ex
Ident-no.	7507005	7507205
Ident-no. with FM/CSA Certification	75070	75072
Supply voltage U_B	19...29 VDC	19...29 VDC
Ripple W_{PP}	≤ 10 %	≤ 10 %
Current consumption	approx. 70 mA at 24 V	approx. 70 mA at 24 V
Galvanic isolation	between input circuit, output circuit and supply voltage for 250 V_{rms}, test voltage 2.5 kV_{rms}	between input circuit, output circuit and supply voltage for 250 V_{rms}, test voltage 2.5 kV_{rms}
Input circuits		
"OFF" signal	≤ 5 V	≤ 5 V
"ON" signal	10…30 VDC	10…30 VDC
Input current	≤ 1 mA/24 VDC	≤ 1 mA/24 VDC
Switch-on delay	≤ 2 ms	≤ 2 ms
Output circuits	intrinsically safe according to EN 50020	intrinsically safe according to EN 50020
Output voltage	12 VDC (6 VDC with jumpers 3 - 4)	24 VDC (15 VDC with jumpers 3 - 4)
Output current	50 mA, short-circuit protected	25 mA, short-circuit protected
Output curve	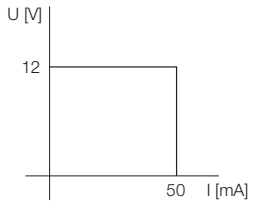	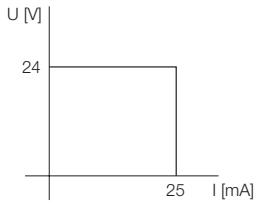
Switching frequency		
– Via input circuit	≤ 250 Hz	≤ 250 Hz
– Via power supply	≤ 25 Hz	≤ 25 Hz
Ex-approvals acc. to certificate of conformity	PTB 99 ATEX 2116	PTB 99 ATEX 2116
Maximum nominal values		
– No load voltage U_0	15.8 V	28.4 V
– Short-circuit current I_k	59.4 mA	32.2 mA
– Power P_{max}	0.94 W	0.92 W
Max. external inductances/capacitances L_0/C_0		
– [EEx ib] IIC	1.5 mH/110 nF	–
– [EEx ib] IIB	5 mH/370 nF	10 mH/128 nF
Marking of device	II (2) G [EEx ib] IIC	II (2) G [EEx ib] IIC
LED indications		
– Switching status	yellow	yellow
– Power	green	green
Housing	8-pole, 18 mm wide, Polycarbonate/ABS, flammability class V-0 per UL 94	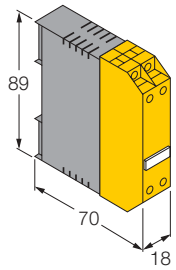
Mounting	snap-on clamps for top-hat rail (DIN 50022) or screw terminals for panel mounting	
Connection	via flat terminals with self-lifting pressure plates	
Connection profile	≤ 2 x 2.5 mm² or 2 x 1.5 mm² with wire sleeves	
Degree of protection (IEC 60529/EN 60529)	IP20	
Operating temperature	-25…+60 °C	

Solenoid Drivers
MK72-S01...08-Ex/24VDC

Type	MK72-S03-Ex	MK72-S04-Ex
Ident-no.	7507300	7507305
Supply voltage U_B	19...29 VDC	19...29 VDC
Ripple W_{PP}	≤ 10 %	≤ 10 %
Current consumption	30 mA at 24 V	70 mA at 24 V
Galvanic isolation	between input circuit, output circuit and supply voltage for 250 V_{rms}, test voltage 2.5 kV_{rms}	between input circuit, output circuit and supply voltage for 250 V_{rms}, test voltage 2.5 kV_{rms}
Input circuits		
"OFF" signal	≤ 5 V	≤ 5 V
"ON" signal	10…30 VDC	10…30 VDC
Input current	≤ 1 mA/24 VDC	≤ 1 mA/24 VDC
Switch-on delay	≤ 2 ms	≤ 2 ms
Output circuits	intrinsically safe according to EN 50020	intrinsically safe according to EN 50020
Output voltage	8 VDC	13 VDC
Output current	20 mA, short-circuit protected	45 mA, short-circuit protected
Output curve	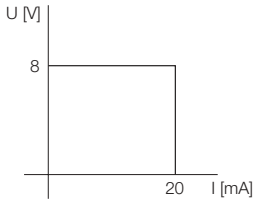	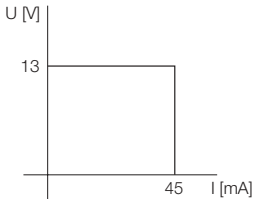
Switching frequency		
– Via input circuit	≤ 250 Hz	≤ 250 Hz
– Via power supply	≤ 25 Hz	≤ 25 Hz
Ex-approvals acc. to certificate of conformity	PTB 99 ATEX 2116	PTB 99 ATEX 2116
Maximum nominal values		
– No load voltage U_0	10.5 V	15.8 V
– Short-circuit current I_k	32.2 mA	52 mA
– Power P_{max}	0.34 W	0.82 W
Max. external inductances/capacitances L_0/C_0		
– [EEx ib] IIC	4 mH/400 nF	1.5 mH/160 nF
– [EEx ib] IIB	7 mH/1700 nF	6 mH/550 nF
Marking of device	II (2) G [EEx ib] IIC	II (2) G [EEx ib] IIC
LED indications		
– Switching status	yellow	yellow
– Power	green	green
Housing	8-pole, 18 mm wide, Polycarbonate/ABS, flammability class V-0 per UL 94	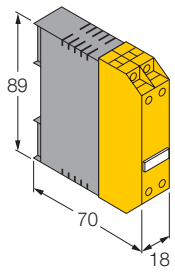
Mounting	snap-on clamps for top-hat rail (DIN 50022) or screw terminals for panel mounting	
Connection	via flat terminals with self-lifting pressure plates	
Connection profile	≤ 2 x 2.5 mm² or 2 x 1.5 mm² with wire sleeves	
Degree of protection (IEC 60529/EN 60529)	IP20	
Operating temperature	-25…+60 °C	

5

Solenoid Drivers MK72-S01...08-Ex

Type	MK72-S05-Ex	MK72-S06-Ex
Ident-no.	7507310	7507315
Supply voltage U_B	19...29 VDC	19...29 VDC
Ripple W_{PP}	≤ 10 %	≤ 10 %
Current consumption	70 mA at 24 V	65 mA bei 24V
Galvanic isolation	between input circuit, output circuit and supply voltage for 250 V_{rms}, test voltage 2.5 kV_{rms}	between input circuit, output circuit and supply voltage for 250 V_{rms}, test voltage 2.5 kV_{rms}
Input circuits		
"OFF" signal	≤ 5 V	≤ 5 V
"ON" signal	10…30 VDC	10…30 VDC
Input current	≤ 1 mA/24 VDC	≤ 1 mA/24 VDC
Switch-on delay	≤ 2 ms	≤ 2 ms
Output circuits	intrinsically safe according to EN 50020	intrinsically safe according to EN 50020
Output voltage	15 VDC	17.5 VDC
Output current	47 mA, short-circuit protected	36 mA, short-circuit protected
Output curve	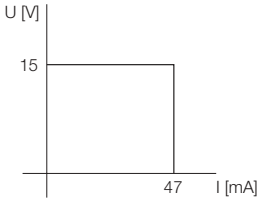	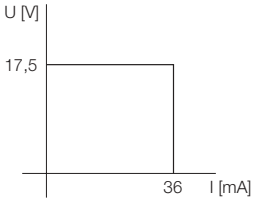
Switching frequency		
– Via input circuit	≤ 250 Hz	≤ 250 Hz
– Via power supply	≤ 25 Hz	≤ 25 Hz
Ex-approvals acc. to certificate of conformity	PTB 99 ATEX 2116	PTB 99 ATEX 2116
Maximum nominal values		
– No load voltage U_0	17.5 V	21 V
– Short-circuit current I_k	59.4 mA	45 mA
– Power P_{max}	1.04 W	0.95 W
Max. external inductances/capacitances L_0/C_0		
– [EEx ib] IIC	0.9 mH/120 nF	0.6 mH/79 nF
– [EEx ib] IIB	4 mH/470 nF	3.5 mH/360 nF
Marking of device	II (2) G [EEx ib] IIC	II (2) G [EEx ib] IIC
LED indications		
– Switching status	yellow	yellow
– Power	green	green
Housing	8-pole, 18 mm wide, Polycarbonate/ABS, flammability class V-0 per UL 94	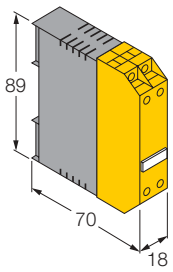
Mounting	snap-on clamps for top-hat rail (DIN 50022) or screw terminals for panel mounting	
Connection	via flat terminals with self-lifting pressure plates	
Connection profile	≤ 2 x 2.5 mm^2 or 2 x 1.5 mm^2 with wire sleeves	
Degree of protection (IEC 60529/EN 60529)	IP20	
Operating temperature	-25…+60 °C	

Solenoid Drivers
MK72-S01...08-Ex/24VDC

Type	MK72-S07-Ex	MK72-S08-Ex
Ident-no.	7507320	7507325
Supply voltage U_B	19...29 VDC	19...29 VDC
Ripple W_{PP}	≤ 10 %	≤ 10 %
Current consumption	60 mA at 24 V	60 mA at 24 V
Galvanic isolation	between input circuit, output circuit and supply voltage for 250 V_{rms}, test voltage 2.5 kV_{rms}	between input circuit, output circuit and supply voltage for 250 V_{rms}, test voltage 2.5 kV_{rms}
Input circuits		
"OFF" signal	≤ 5 V	≤ 5 V
"ON" signal	10…30 VDC	10…30 VDC
Input current	≤ 1 mA/24 VDC	≤ 1 mA/24 VDC
Switch-on delay	≤ 2 ms	≤ 2 ms
Output circuits	intrinsically safe according to EN 50020	intrinsically safe according to EN 50020
Output voltage	19 VDC	21 VDC
Output current	32 mA, short-circuit protected	25 mA, short-circuit protected
Output curve	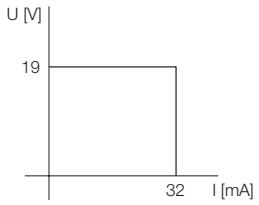	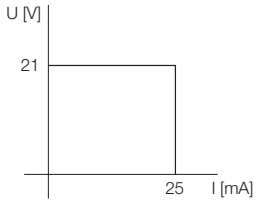
Switching frequency		
– Via input circuit	≤ 250 Hz	≤ 250 Hz
– Via power supply	≤ 25 Hz	≤ 25 Hz
Ex-approvals acc. to certificate of conformity	PTB 99 ATEX 2116	PTB 99 ATEX 2116
Maximum nominal values		
– No load voltage U_0	22.3 V	24.2 V
– Short-circuit current I_k	41 mA	32.2 mA
– Power P_{max}	0.92 W	0.78 W
Max. external inductances/capacitances L_0/C_0		
– [EEx ib] IIC	0.6 mH/61 nF	0.5 mH/47 nF
– [EEx ib] IIB	3 mH/330 nF	3 mH/290 nF
Marking of device	II (2) G [EEx ib] IIC	II (2) G [EEx ib] IIC
LED indications		
– Switching status	yellow	yellow
– Power	green	green
Housing	8-pole, 18 mm wide, Polycarbonate/ABS, flammability class V-0 per UL 94	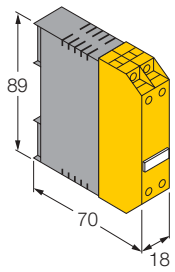
Mounting	snap-on clamps for top-hat rail (DIN 50022) or screw terminals for panel mounting	
Connection	via flat terminals with self-lifting pressure plates	
Connection profile	≤ 2 x 2.5 mm² or 2 x 1.5 mm² with wire sleeves	
Degree of protection (IEC 60529/EN 60529)	IP20	
Operating temperature	-25…+60 °C	

5

 Hans Turck GmbH & Co.KG • D–45466 Mülheim/Ruhr • Tel. 0208/4952-0 • Fax 0208/4952-264 • E-Mail: turckmh@mail.turck-globe.de • www.turck.com

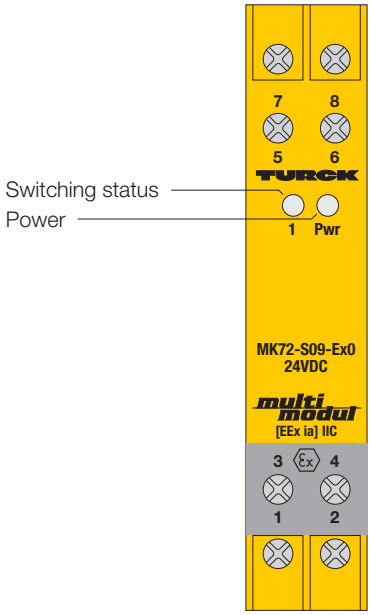

Solenoid Driver MK72-S09-Ex0 for Booster Valves 1-channel

- **1-channel solenoid driver for booster valves**
- **Intrinsically safe output circuits EEx ia**
- **Area of application according to ATEX: II (1) GD**
- **Designed for booster valve control**
- **Initialisation voltage of 17 V**
- **24 VDC input voltage**
- **Galvanic isolation between input circuit and output circuit**

The valve control module MK72-S09.. is designed for supply/control of booster valves. The intrinsically safe output features an isolated voltage, which provides 17 V (initialisation voltage) in the no-load mode when the logic input is de-activated.
This level is just below the switch-on threshold of the booster valve. When the logic input is activated, the output voltage rises to 22 V (no-load operation) and the valve switches. Then the voltage drops to a hold value of 4.7 V.
After de-activation of the control signal, the solenoid driver generates an internal pulse, i.e. the output voltage goes down to 0 V for a period of 0.5 s to turn off the valve.

After the turn-off phase, the output voltage returns to 17 V. This mode of operation ensures minimum switch-on times.
The logic input is controlled via potential-free contacts or an input voltage of 10...35 V. The drive time includes the internal power-up time of the booster valve.

Note:
- The voltage values and the duration of the switch-off pulse can be adapted to customer requirements and the specific valve type used.
- The output voltage value quoted refers to the no-load operation mode. The voltage drop over the barrier resistor of 292 Ω must be substracted from the voltage applying to terminals 1 and 2.

Connected loads can be driven in two different ways:

(I) By applying power: jumper terminals 5 and 6. In this operating mode the switching frequency is limited to 8 Hz.

(II) With permanent voltage supply via the input circuit: use either an isolated contact between terminals 5 and 6 or apply input voltage to terminal 5. Due to the minimal current requirements and the large voltage range, even PLC outputs with low power or large voltage drops can be used for drive purposes. In this operating mode the highest switching frequency of 250 Hz is reached.

Within the area of applicability of the European directive 94/9/EC (ATEX 100a) it is permitted to connect and operate booster valves in potentially explosive atmospheres caused by dust or gas, provided they comply with the applicable regulations.

A yellow LED indicates the switching status of the relay; a green LED indicates that the device is powered.

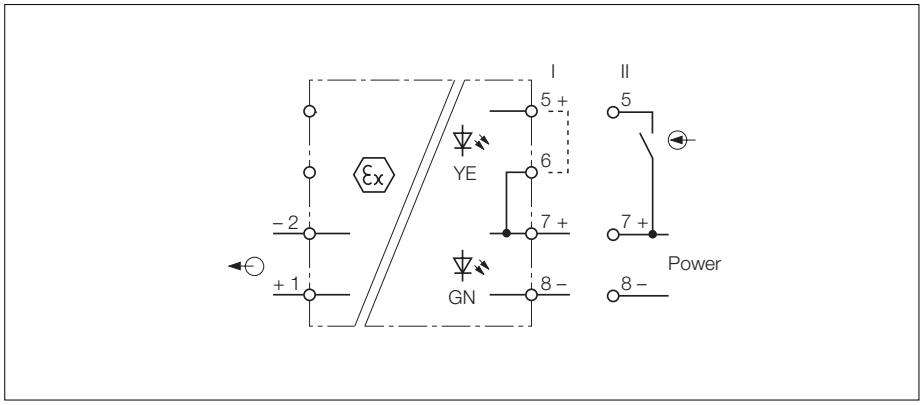

5

Solenoid Driver MK72-S09-Ex0 for Booster Valves

Type	MK72-S09-Ex0/24VDC
Ident-no.	7507328
Supply voltage U_B	19...35 VDC
Ripple W_{PP}	≤ 10 %
Power consumption	approx. 2 W
Galvanic isolation	between input circuit, output circuit and supply voltage for 250 V_{rms}, test voltage 2.5 kV_{rms}
Input circuits	
"OFF" signal	≤ 5 V
"ON" signal	10…35 VDC
Input current	≤ 1 mA/24 VDC
Switch-on delay	≤ 2 ms
Output circuits	intrinsically safe according to EN 50020
Output voltage	17 VDC initialisation voltage/22 VDC during drive operation
Output current	≤ 42 mA, short-circuit protected
Internal resistance	292 Ω
Switch-off pulse	0 V/500 ms
Switching frequency	
– Via control input	≤ 250 Hz
– Via power supply	≤ 8 Hz
Ex-approvals acc. to certificate of conformity	TÜV ATEX 1553
Maximum nominal values	
– No load voltage U_0	23.3 V
– Short-circuit current I_0	107.5 mA
– Power P_0	0.84 W
– Resistance R	292 Ω
Characteristic curve	linear
Max. external inductances/capacitances L_0/C_0	
– [EEx ia] IIC	1.40 mH/58 nF
– [EEx ia] IIB	1.50 mH/360 nF
Marking of device	II (1) GD [EEx ia] IIC
LED indications	
– Switching status	yellow
– Power	green
Housing	8-pole, 18 mm wide, Polycarbonate/ABS, flammability class V-0 per UL 94
Mounting	snap-on clamps for top-hat rail (DIN 50022) or screw terminals for panel mounting
Connection	via flat terminals with self-lifting pressure plates
Connection profile	≤ 2 x 2.5 mm^2 or 2 x 1.5 mm^2 with wire sleeves
Degree of protection (IEC 60529/EN 60529)	IP20
Operating temperature	-25…+60 °C

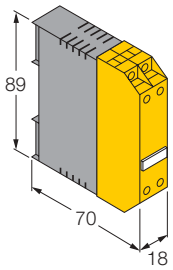

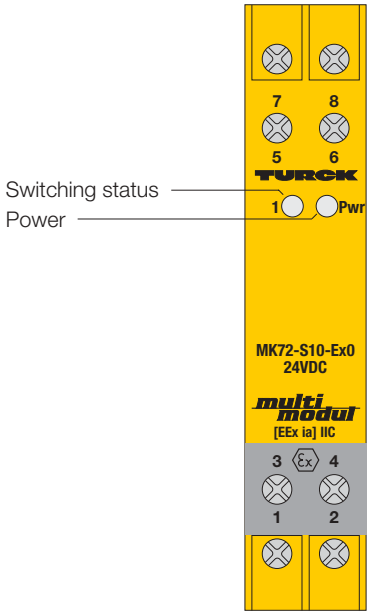

Solenoid Drivers MK72-S10...22-Ex0 1-channel

- **1-channel solenoid drivers**
- **Intrinsically safe output circuits EEx ia**
- **Area of application according to ATEX: II (1) GD**
- **Input voltage 24 VDC**
- **Galvanic isolation between input circuit and output circuit**

The solenoid drivers series MK72 provide an intrinsically safe output with limited current and voltage. Within the area of applicability of the European directive 94/9/EC (ATEX 100a) it is permitted to operate connected loads in potentially explosive atmospheres caused by dust or gas, provided they comply with the applicable regulations.

Typical applications are:

– driving of EExi pilot valves
– display supply
– transmitter supply

The output values of the devices MK72-S10... to MK72-S22... differ with respect to the no-load voltage and output current indications and are adapted to the valves of different manufacturers.

Connected loads can be driven in two different ways:

(I) By applying power: jumper terminals 5 and 6. In this operating mode the switching frequency is limited to 8 Hz.

(II) With permanent voltage supply via the input circuit: use either an isolated contact between terminals 5 and 6 or apply input voltage to terminal 5. Due to the minimal current requirements and the large voltage range, even PLC outputs with low power or large voltage drops can be used for drive purposes. In this operating mode the highest switching frequency of 250 Hz is reached.

A yellow LED indicates the switching status of the relay; a green LED indicates that the device is powered.

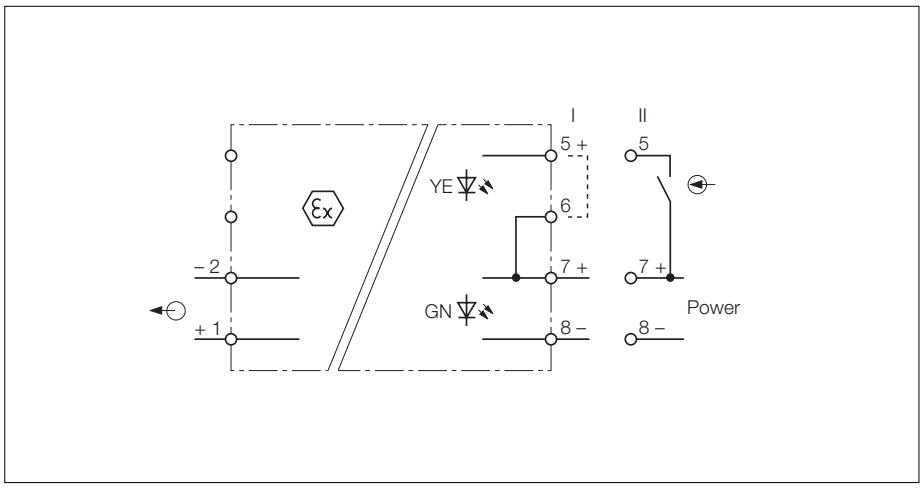

Solenoid Drivers MK72-S10...22-Ex0

Type	MK72-S10-Ex0/24VDC	MK72-S11-Ex0/24VDC
Ident-no.	7507331	7507332
Supply voltage U_B	19...35 VDC	19...35 VDC
Ripple W_{PP}	≤ 10 %	≤ 10 %
Current consumption	approx. 90 mA at 24 V	approx. 35 mA at 24 V
Galvanic isolation	between input circuit, output circuit and supply voltage for 250 V_{rms}, test voltage 2.5 kV_{rms}	between input circuit, output circuit and supply voltage for 250 V_{rms}, test voltage 2.5 kV_{rms}
Input circuits		
"OFF" signal	≤ 5 V	≤ 5 V
"ON" signal	10…35 VDC	10…35 VDC
Input current	≤ 1 mA/24 VDC	≤ 1 mA/24 VDC
Switch-on delay	≤ 2 ms	≤ 2 ms
Output circuits	intrinsically safe according to EN 50020	intrinsically safe according to EN 50020
Output voltage	12 VDC	12 VDC
Output current	60 mA, short-circuit protected	30 mA, short-circuit protected
Switching frequency		
– Via input circuit	≤ 250 Hz	≤ 250 Hz
– Via power supply	≤ 8 Hz	≤ 8 Hz
Output curve	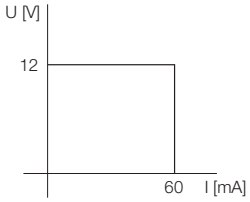	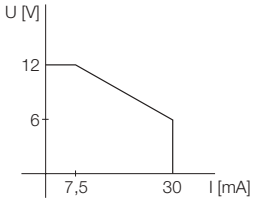
Ex-approvals acc. to certificate of conformity	TÜV 00 ATEX 1553	TÜV 00 ATEX 1553
Maximum nominal values		
– No load voltage U_0	14.5 V	13.1 V
– Short-circuit current I_0	164.2 mA	73.4 mA
– Power P_0	1.28 W	0.40 W
– Resistance R	191 Ω	297 Ω
Characteristic curve	trapezoidal	linear
Max. external inductances/capacitances L_0/C_0		
– [EEx ia] IIC	0.46 mH/230 nF	1.40 mH/284 nF
– [EEx ia] IIB	3.00 mH/640 nF	5.00 mH/1025 nF
Marking of devices	II (1) GD [EEx ia] IIC	II (1) GD [EEx ia] IIC
LED indications		
– Switching status	yellow	yellow
– Power	green	green
Housing	8-pole, 18 mm wide, Polycarbonate/ABS, flammability class V-0 per UL 94	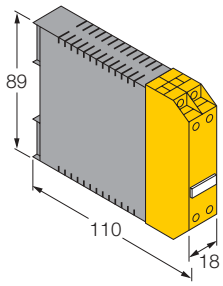
Mounting	snap-on clamps for top-hat rail (DIN 50022) or screw terminals for panel mounting	
Connection	via flat terminals with self-lifting pressure plates	
Connection profile	≤ 2 x 2.5 mm² or 2 x 1.5 mm² with wire sleeves	
Degree of protection (IEC 60529/EN 60529)	IP20	
Operating temperature	-25…+60 °C	

Solenoid Drivers
MK72-S10...22-Ex0

Type	MK72-S12-Ex0/24VDC	MK72-S13-Ex0/24VDC
Ident-no.	7507333	7507334
Supply voltage U_B	19...35 VDC	19...35 VDC
Ripple W_{PP}	≤ 10 %	≤ 10 %
Current consumption	90 mA at 24 V	129 mA at 24 V
Galvanic isolation	between input circuit, output circuit and supply voltage for 250 V_{rms}, test voltage 2.5 kV_{rms}	between input circuit, output circuit and supply voltage for 250 V_{rms}, test voltage 2.5 kV_{rms}
Input circuits		
"OFF" signal	≤ 5 V	≤ 5 V
"ON" signal	10…35 VDC	10…35 VDC
Input current	≤ 1 mA/24 VDC	≤ 1 mA/24 VDC
Switch-on delay	≤ 2 ms	≤ 2 ms
Output circuits	intrinsically safe according to EN 50020	intrinsically safe according to EN 50020
Output voltage	16 VDC	16 VDC
Output current	65 mA, short-circuit protected	80 mA, short-circuit protected
Switching frequency		
– Via input circuit	≤ 250 Hz	≤ 250 Hz
– Via power supply	≤ 8 Hz	≤ 8 Hz
Output curve	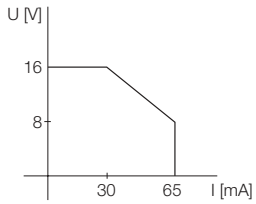	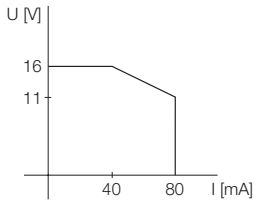
Ex-approvals acc. to certificate of conformity	TÜV 00 ATEX 1553	TÜV 00 ATEX 1553
Maximum nominal values		
– No load voltage U_0	17.4 V	17.4 V
– Short-circuit current I_0	130.1 mA	190.8 mA
– Power P_0	0.92 W	1.35 W
– Resistance R	218 Ω	149 Ω
Characteristic curve	linear	linear
Max. external inductances/capacitances L_0/C_0		
– [EEx ia] IIC	0.70 mH/157 nF	0.16 mH/323 nF
– [EEx ia] IIB	3.00 mH/640 nF	2.50 mH/515 nF
Marking of devices	II (1) GD [EEx ia] IIC	II (1) GD [EEx ia] IIC
LED indications		
– Switching status	yellow	yellow
– Power	green	green
Housing	8-pole, 18 mm wide, Polycarbonate/ABS, flammability class V-0 per UL 94	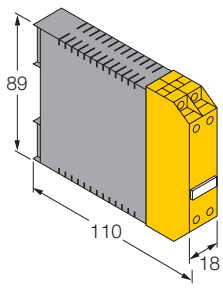
Mounting	snap-on clamps for top-hat rail (DIN 50022) or screw terminals for panel mounting	
Connection	via flat terminals with self-lifting pressure plates	
Connection profile	≤ 2 x 2.5 mm^2 or 2 x 1.5 mm^2 with wire sleeves	
Degree of protection (IEC 60529/EN 60529)	IP20	
Operating temperature	-25…+60 °C	

5

Solenoid Drivers MK72-S10...22-Ex0

Type	MK72-S14-Ex0/24VDC	MK72-S15-Ex0/24VDC
Ident-no.	7507330	7507335
Supply voltage U_B	19...35 VDC	19...35 VDC
Ripple W_{PP}	≤ 10 %	≤ 10 %
Current consumption	90 mA at 24 V	100 mA at 24V
Galvanic isolation	between input circuit, output circuit and supply voltage for 250 V_{rms}, test voltage 2.5 kV_{rms}	between input circuit, output circuit and supply voltage for 250 V_{rms}, test voltage 2.5 kV_{rms}
Input circuits		
"OFF" signal	≤ 5 V	≤ 5 V
"ON" signal	10…35 VDC	10…35 VDC
Input current	≤ 1 mA/24 VDC	≤ 1 mA/24 VDC
Switch-on delay	≤ 2 ms	≤ 2 ms
Output circuits	intrinsically safe according to EN 50020	intrinsically safe according to EN 50020
Output voltage	16 VDC	16 VDC
Output current	60 mA, short-circuit protected	60 mA, short-circuit protected
Switching frequency		
– Via input circuit	≤ 250 Hz	≤ 250 Hz
– Via power supply	≤ 8 Hz	≤ 8 Hz
Output curve	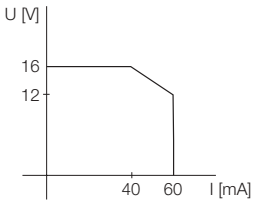	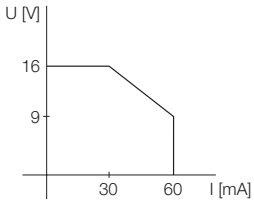
Ex-approvals acc. to certificate of conformity	TÜV 00 ATEX 1553	TÜV 00 ATEX 1553
Maximum nominal values		
– No load voltage U_0	17.4 V	17.4 V
– Short-circuit current I_0	176.2 mA	110.6 mA
– Power P_0	1.38 W	0.87 W
– Resistance R	178 Ω	284 Ω
Characteristic curve	linear	linear
Max. external inductances/capacitances L_0/C_0		
– [EEx ia] IIC	–	0.70 mH/160 nF
– [EEx ia] IIB	2.50 mH/495 nF	3.20 mH/627 nF
Marking of devices	II (1) GD [EEx ia] IIB	II (1) GD [EEx ia] IIC
LED indications		
– Switching status	yellow	yellow
– Power	green	green
Housing	8-pole, 18 mm wide, Polycarbonate/ABS, flammability class V-0 per UL 94	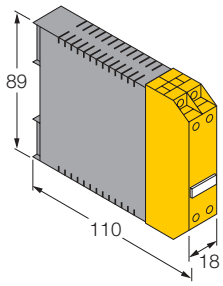
Mounting	snap-on clamps for top-hat rail (DIN 50022) or screw terminals for panel mounting	
Connection	via flat terminals with self-lifting pressure plates	
Connection profile	≤ 2 x 2.5 mm² or 2 x 1.5 mm² with wire sleeves	
Degree of protection (IEC 60529/EN 60529)	IP20	
Operating temperature	-25…+60 °C	

Solenoid Drivers
MK72-S10...22-Ex0

Type	MK72-S16-Ex0/24VDC	MK72-S17-Ex0/24VDC
Ident-no.	7507336	7507337
Supply voltage U_B	19...35 VDC	19...35 VDC
Ripple W_{PP}	≤ 10 %	≤ 10 %
Current consumption	105 mA at 24 V	35 mA at 24 V
Galvanic isolation	between input circuit, output circuit and supply voltage for 250 V_{rms}, test voltage 2.5 kV_{rms}	between input circuit, output circuit and supply voltage for 250 V_{rms}, test voltage 2.5 kV_{rms}
Input circuits		
"OFF" signal	≤ 5 V	≤ 5 V
"ON" signal	10…35 VDC	10…35 VDC
Input current	≤ 1 mA/24 VDC	≤ 1 mA/24 VDC
Switch-on delay	≤ 2 ms	≤ 2 ms
Output circuits	intrinsically safe according to EN 50020	intrinsically safe according to EN 50020
Output voltage	17 VDC	18 VDC
Output current	55 mA, short-circuit protected	22 mA, short-circuit protected
Switching frequency		
– Via input circuit	≤ 250 Hz	≤ 250 Hz
– Via power supply	≤ 8 Hz	≤ 8 Hz
Output curve	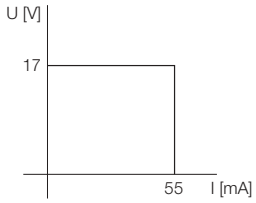	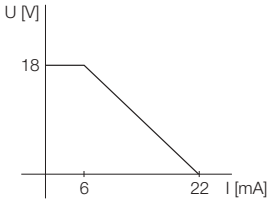
Ex-approvals acc. to certificate of conformity	TÜV 00 ATEX 1553	TÜV 00 ATEX 1553
Maximum nominal values		
– No load voltage U_0	18.3 V	19.3 V
– Short-circuit current I_0	135.4 mA	30.4 mA
– Power P_0	1.27 W	0.27 W
– Resistance R	277 Ω	1168 Ω
Characteristic curve	trapezoidal	linear
Max. external inductances/capacitances L_0/C_0		
– [EEx ia] IIC	–	1.20 mH/128 nF
– [EEx ia] IIB	2.40 mH/488 nF	3.00 mH/627 nF
Marking of devices	II (1) GD [EEx ia] IIB	II (1) GD [EEx ia] IIC
LED indications		
– Switching status	yellow	yellow
– Power	green	green
Housing	8-pole, 18 mm wide, Polycarbonate/ABS, flammability class V-0 per UL 94	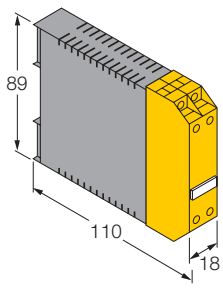
Mounting	snap-on clamps for top-hat rail (DIN 50022) or screw terminals for panel mounting	
Connection	via flat terminals with self-lifting pressure plates	
Connection profile	≤ 2 x 2.5 mm² or 2 x 1.5 mm² with wire sleeves	
Degree of protection (IEC 60529EN 60529)	IP20	
Operating temperature	-25…+60 °C	

5

Solenoid Drivers MK72-S10...22-Ex0

Type	MK72-S18-Ex0/24VDC	MK72-S19-Ex0/24VDC
Ident-no.	7507338	7507339
Supply voltage U_B	19...35 VDC	19...35 VDC
Ripple W_{PP}	≤ 10 %	≤ 10 %
Current consumption	100 mA at 24 V	85 mA at 24 V
Galvanic isolation	between input circuit, output circuit and supply voltage for 250 V_{rms}, test voltage 2.5 kV_{rms}	between input circuit, output circuit and supply voltage for 250 V_{rms}, test voltage 2.5 kV_{rms}
Input circuits		
"OFF" signal	≤ 5 V	≤ 5 V
"ON" signal	10…35 VDC	10…35 VDC
Input current	≤ 1 mA/24 VDC	≤ 1 mA/24 VDC
Switch-on delay	≤ 2 ms	≤ 2 ms
Output circuits	intrinsically safe according to EN 50020	intrinsically safe according to EN 50020
Output voltage	18 VDC	24 VDC
Output current	60 mA, short-circuit protected	35 mA, short-circuit protected
Switching frequency		
– Via input circuit	≤ 250 Hz	≤ 250 Hz
– Via power supply	≤ 8 Hz	≤ 8 Hz
Output curve	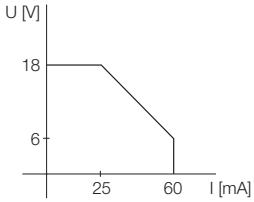	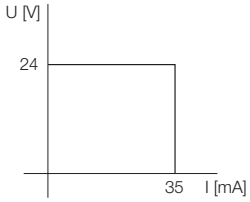
Ex-approvals acc. to certificate of conformity	TÜV 00 ATEX 1553	TÜV 00 ATEX 1553
Maximum nominal values		
– No load voltage U_0	19.3 V	27.6 V
– Short-circuit current I_0	111.1 mA	130.5 mA
– Power P_0	0.96 W	1.32 W
– Resistance R	310 Ω	311 Ω
Characteristic curve	linear	linear
Max. external inductances/capacitances L_0/C_0		
– [EEx ia] IIC	0.50 mH/119 nF	–
– [EEx ia] IIB	2.50 mH/530 nF	3.00 mH/205 nF
Marking of devices	II (1) GD [EEx ia] IIC	II (1) GD [EEx ia] IIB
LED indications		
– Switching status	yellow	yellow
– Power	green	green
Housing	8-pole, 18 mm wide, Polycarbonate/ABS, flammability class V-0 per UL 94	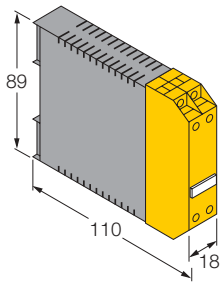
Mounting	snap-on clamps for top-hat rail (DIN 50022) or screw terminals for panel mounting	
Connection	via flat terminals with self-lifting pressure plates	
Connection profile	≤ 2 x 2.5 mm² or 2 x 1.5 mm² with wire sleeves	
Degree of protection (IEC 60529/EN 60529)	IP20	
Operating temperature	-25…+60 °C	

Solenoid Drivers
MK72-S10...22-Ex0

Type	MK72-S20-Ex0/24VDC	MK72-S21-Ex0/24VDC
Ident-no.	7507340	7507341
Supply voltage U_B	19...35 VDC	19...35 VDC
Ripple W_{PP}	≤ 10 %	≤ 10 %
Current consumption	80 mA at 24 V	65 mA at 24 V
Galvanic isolation	between input circuit, output circuit and supply voltage for 250 V_{rms}, test voltage 2.5 kV_{rms}	between input circuit, output circuit and supply voltage for 250 V_{rms}, test voltage 2.5 kV_{rms}
Input circuits		
"OFF" signal	≤ 5 V	≤ 5 V
"ON" signal	10…35 VDC	10…35 VDC
Input current	≤ 1 mA/24 VDC	≤ 1 mA/24 VDC
Switch-on delay	≤ 2 ms	≤ 2 ms
Output circuits	intrinsically safe according to EN 50020	intrinsically safe according to EN 50020
Output voltage	24 VDC	25.5 VDC
Output current	35 mA, short-circuit protected	30 mA, short-circuit protected
Switching frequency		
– Via input circuit	≤ 250 Hz	≤ 250 Hz
– Via power supply	≤ 8 Hz	≤ 8 Hz
Output curve	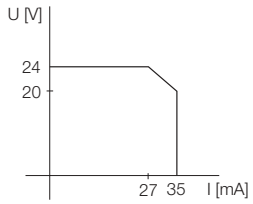	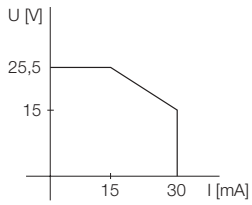
Ex-approvals acc. to certificate of conformity	TÜV 00 ATEX 1553	TÜV 00 ATEX 1553
Maximum nominal values		
– No load voltage U_0	27.6 V	27.6 V
– Short-circuit current I_0	110.5 mA	82.0 mA
– Power P_0	1.12 W	0.92 W
– Resistance R	367 Ω	545 Ω
Characteristic curve	linear	linear
Max. external inductances/capacitances L_0/C_0		
– [EEx ia] IIC	–	–
– [EEx ia] IIB	3.00 mH/205 nF	3.00 mH/194 nF
Marking of devices	II (1) GD [EEx ia] IIB	II (1) GD [EEx ia] IIB
LED Indications		
– Switching status	yellow	yellow
– Power	green	green
Housing	8-pole, 18 mm wide, Polycarbonate/ABS, flammability class V-0 per UL 94	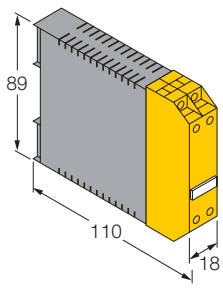
Mounting	snap-on clamps for top-hat rail (DIN 50022) or screw terminals for panel mounting	
Connection	via flat terminals with self-lifting pressure plates	
Connection profile	≤ 2 x 2.5 mm² or 2 x 1.5 mm² with wire sleeves	
Degree of protection (IEC 60529/EN 60529)	IP20	
Operating temperature	-25…+60 °C	

5

Solenoid Drivers MK72-S10...22-Ex0

Type	MK72-S22-Ex0/24VDC
Ident-no.	7507342
Supply voltage U_B	19...35 VDC
Ripple W_{PP}	≤ 10 %
Current consumption	80 mA at 24 V
Galvanic isolation	between input circuit, output circuit and supply voltage for 250 V_{rms}, test voltage 2.5 kV_{rms}
Input circuits	
"OFF" signal	≤ 5 V
"ON" signal	10…35 VDC
Input current	≤ 1 mA/24 VDC
Switch-on delay	≤ 2 ms
Output circuits	intrinsically safe according to EN 50020
Output voltage	25.5 VDC
Output current	35 mA, short-circuit protected
Switching frequency	
– Via input circuit	≤ 250 Hz
– Via power supply	≤ 8 Hz
Output curve	

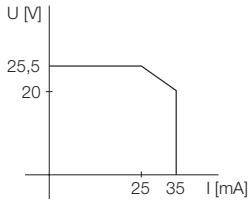

Ex-approvals acc. to certificate of conformity	TÜV 00 ATEX 1553
Maximum nominal values	
– No load voltage U_0	27.6 V
– Short-circuit current I_0	109.3 mA
– Power P_0	1.11 W
– Resistance R	371 Ω
Characteristic curve	linear
Max. external inductances/capacitances L_0/C_0	
– [EEx ia] IIC	–
– [EEx ia] IIB	3.00 mH/202 nF
Marking of devices	II (1) GD [EEx ia] IIB
LED indications	
– Switching status	yellow
– Power	green
Housing	8-pole, 18 mm wide, Polycarbonate/ABS, flammability class V-0 per UL 94
Mounting	snap-on clamps for top-hat rail (DIN 50022) or screw terminals for panel mounting
Connection	via flat terminals with self-lifting pressure plates
Connection profile	≤ 2 x 2.5 mm^2 or 2 x 1.5 mm^2 with wire sleeves
Degree of protection (IEC 60529/EN 60529)	IP20
Operating temperature	-25…+60 °C

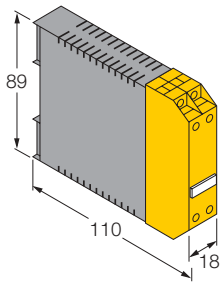

COUPLERS AND INTERFACE DEVICES

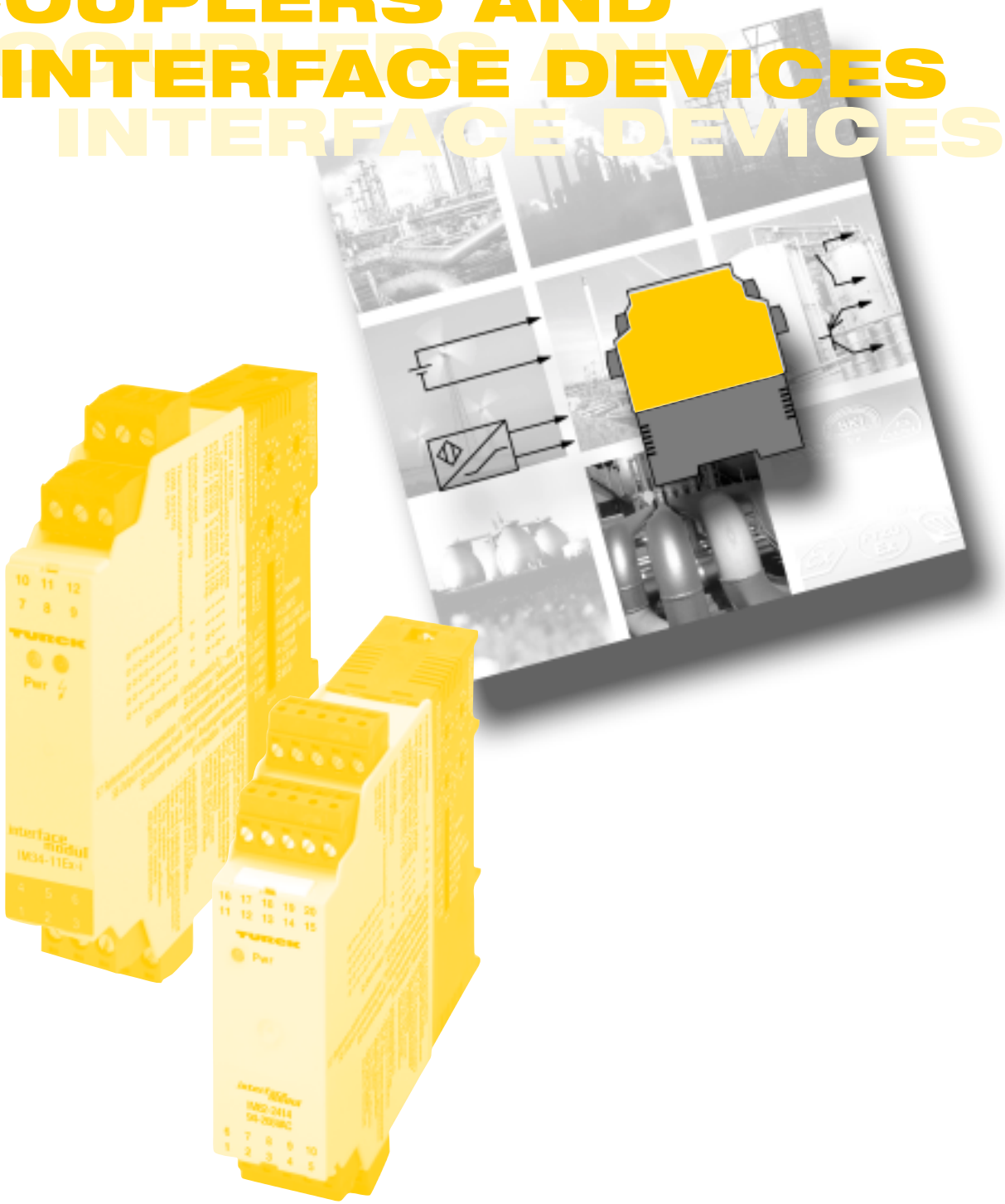

6

Couplers and Interface Devices Selection Guide

Housing Style *interfacemodul multimodul multicart®*

Housing	interface modul	multi modul																
Type	IM73-12-R	MK71-T12	MK73-R111-Ex0	MK73-R222-Ex0	MK73-T22A.../K20	MK73-R22A	MK73-R22E	MK73-R44A	MK73-T44A.../K20	MK73-R44E	MK73-T22A	MK73-T22E	MK73-T44A	MK73-T44E	MK73-Z22A	MK73-Z44A
Functions																
Input/output coupler (I/O)		●	●	●	O	O	I	O	O	I	O	I	O	I	O	I
Relay coupler	●		●	●		●	●	●		●	●					
Relay coupler with electronic input																
Inductive coupler		●			●				●							
Optocoupler											●	●	●		●	
Galvanic isolation		*)														
Between input and output circuit	●	●	●	●	●	●	●	●	●	●	●	●	●	●	●	●
4 mm/2 kV			●	●												
8 mm/4 kV						●	●	●		●	●	●	●	●	●	●
acc. to EN 50020			●	●												
Number of channels	1	1	1	2	4	2	2	4	4	4	2	2	4	4	2	4
Input		*)														
12 VUC						●	●	●		●	●	●	●	●	●	●
10 ... 30 VUC			●	●												
24 VDC											●	●	●	●		
24 VUC	●					●	●	●		●	●	●	●	●	●	●
5 ... 30 VDC																
17 ... 30 VDC																
10 ... 65 VDC																
30 ... 120 VDC											●	●	●	●	●	●
3 ... 8 VDC																
80 ... 150 VAC											●	●	●	●	●	●
150 ... 250 VAC											●	●	●	●	●	●
90 ... 250 VAC																
160 ... 250 VAC																
230 VAC	●															
acc. to EN 60947-5-6 (NAMUR)																
Switching frequency																
< ... Hz	5		50	50		10	10	10		10	25	25	25	25		
< ... kHz		1			1				1		20	20	20	20		
Output circuits		*)														
Intrinsically safe relay																
Relay, NO(S) / NC(O) /				1S		1S	1S	2S		1S						
SPDT(U) per channel	2U		1U													
with contact protection					●		●	●		●						
Transistor, potential-free					●				●		●	●	●	●		
Triac															●	●
Switching voltage / capacity		*)														
5 ... 65 VDC			●	●												
30 VDC																
36 VDC											●	●	●	●		
30 VAC																
20 ... 250 VAC																
250 V	●					●	●	●		●					●	●
28 VDC																
45 VDC										●						
Maximum switching current [A]	5	0.2	0.24	0.24	1	2	2	2	1	2	0.1	0.1	0.1	0.1	0.5	0.5
Data sheet – see page	7	5	9	9	11	11	11	11	11	11	11	11	11	11	11	11

Hans Turck GmbH & Co.KG • D–45466 Mülheim/Ruhr • Tel. 0208/4952-0 • Fax 0208/4952-264 • E-Mail: turckmh@mail.turck-globe.de • www.turck.com

	multi modul								multi cart												
	MK73-R11	MK73-R11H	MK73-R12	MK73-R14	MK73-R22	MK73-S01	MK73-S02	MK73-UR12/K03	MC73-44-R	MC73-48-R/RSi	MC73-48-RE1/2/3	MC73-88-R	MC73-88T	MC73-441Ex0-R	MC73-442Ex0-R	MC73-481-R	MC73-481-RE/3	MC73-881-R	MC73-881-RE/3	MC75-44-R	MC75-441-R
	•	•	•		•	**)	**)	•	•	O	•	•	•	•	•	•	•	•	•	•	•
	•	•	•	•	•	•	•	•	•	•	•	•		•	•	•	•	•		•	•
																	•				
								•				•									
	•	•	•		•			•	•		•	•	•	•	•	•	•	•	•	•	•
			•			•	•	•						•		•			•	•	
	•	•							•	•		•						•	•	•	•
														•	•						
	1	1	1	1	2	1	1	1	4	2	4	8	8	4	4	4	4	8	8	4	4
		•				•	•	•		•											
	•	•	•	•	•				•			•		•	•	•		•			•
													•								
											•						•		•		
											•						•		•		
											•						•		•		
	•		•																•		
								•													
	5	5	5	5	5	5	5	5	10	10	10	10		50	10	10	10	10	5	5	5
													5								
														•	•						
	1U	1U	2U	4U	1S	3S	3S	1S	1U	1U	2U	1S		1U	2U	2U	1U	1U	1U	1U	1U
						2O	1O	1U													
	•	•			•			•		•											
													•								
											•										
																•	•	•	•		
																•	•	•	•		
	•	•	•	•	•	•	•		•	•	•	•								•	•
														•							
															•						
	3	2	5	2	2	3	3	5	3	2	2	2	0.2	0.24	0.5	2	2	2	2	2	0.5
	15	17	19	21	23	25	27	29	catalogue *multicart®*												

*) See data sheet for details
**) TÜV tested relay with forced guided contacts

6

Couplers and Interface Devices

Couplers and interface devices provide the following functions:

- isolation of different signals
- conversion of signal levels, e. g. from 24 VDC...220 VAC
- noise suppression
- signal amplification

This extensive product line covers the wide range of functions that are needed to meet the various application requirements in this field.

Interface devices can be divided into several function groups according to their functionality:

- relay couplers
- electronic couplers
- relay couplers with intrinsically safe output circuits

Relay couplers

Relays are used in a wide variety of applications:

Apart from the good price, this proven interface technology provides further advantages:

- secure galvanic isolation between input and output circuits
- extended switching capacity range
- no leakage current when contacts are open
- minimal power loss when contacts are closed
- multiple contact capability

The use of relay couplers is limited by their relatively low switching frequencies and limited contact life. TURCK uses high quality relays with a mechanical life of at least 20 million switching operations. The electrical life depends strongly on the connected load type and can drop to approx. 1 million switching operations, when the relay contacts are subject to maximum load.

TURCK's relay couplers are offered as four or eight channel Eurocard versions. Single or dual channel versions are available in modular housings.

A key consideration in the selection of the appropriate electrical relay is the contact material. Silver alloy, the standard contact material, is primarily intended for power circuits and is somewhat less reliable for low voltages (≤ 10 mA). Hard gold-plated contacts should be used for low voltage level applications.

If a high current is switched with a gold-plated contact, the gold plating will be damaged and consequently the contacts are unsuitable for switching low level currents.

All switching capacity and switching current indications refer to resistive loads. For inductive loads it is required to observe the relay-specific load limits, which can be provided by TURCK on request.

If the relay coupler is directly to connected to a contactor, the contactor must be equipped with a protective circuitry at the coil connection.

Relay coupler with direct control

The coil in the relay coupler is energised directly by the input signal. A bridge rectifier is wired in series with the non-polarised coil circuit which can then be interfaced directly to AC input circuits. The rectifier bridge acts as a free wheeling diode and the flyback voltage is suppressed when the relay is de-energised.

Hybrid Relays with amplifier input

Relay couplers with amplifier input provide additional circuitry for input signal amplification. This makes them suitable for low level signal sources that otherwise would not be capable of switching a relay directly. At a typical current consumption of ≤ 2 mA, the relays have pre-defined switching thresholds, depending on the particular version. This type of relay needs auxiliary power.

Electronic couplers

Relays using contacts suffer certain disadvantages such as contact bounce, limited contact life and low switching frequency. In addition, they are unsuitable for low level operation (current and voltage), unless special contact materials are used.

By comparison, electronic relays are bounce-free, resistant to wear and have a high switching frequency.

Electronic relays provide a wide control voltage range. As with all electronic devices the voltage in the on-state and the leakage current in the off-state should be considered. Devices with Triac outputs also require a minimum load current. Generally, output circuits are not short-circuit protected.

Safe isolation according to VDE 0106

Relays with safe isolation according to VDE 0106 are offered on *interfacemodul, multimodul* and in *multicart®* style modular housings.

Forced-guided contact pairs

Safety relay couplers are equipped with forced-guided contact pairs, i.e. a normally open and a normally closed contact are linked. This method provides a control contact to supervise correct switching operation.

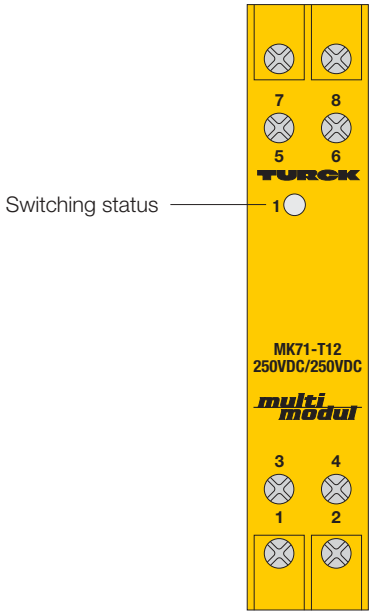

Inductive Coupler
MK71-T12-60VDC/250VDC
MK71-T12-250VDC/250VDC
1-channel

- **1-channel inductive coupler**
- **Galvanic isolation between input circuit and output circuit**
- **Extended control voltage range**

The single channel electronic couplers MK71-T12/… provide a reliable isolation between contact and control circuit.

A yellow LED on the front of the device indicates the switching status.

The coupler has a defined switching threshold. The output Mosfets will only be switched after the input value has reached a preset value.

Above the preset value the input current remains constant, even if the input voltage varies.

6

MK71-T12-60VDC/250VDC

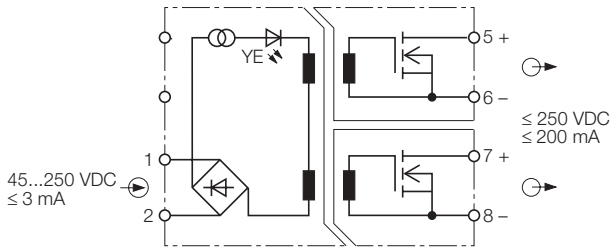

MK71-T12-250VDC/250VDC

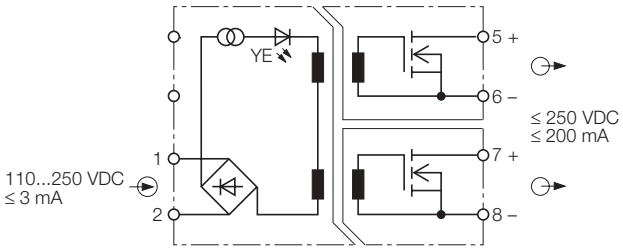

Inductive Coupler MK71-T12

Type	MK71-T12-60VDC/250VDC	MK71-T12-250VDC/250VDC
Ident-no.	7515302	7515301
Clearances and creepage distances	safe galvanic isolation	safe galvanic isolation
Between input and contact circuit	5 mm below varnish and plastic/5 kV	5 mm below varnish and plastic/5 kV
Between contact circuits	4 mm below varnish 2.5 kV	4 mm below varnish 2.5 kV
Input circuits	reverse polarity protected	reverse polarity protected
Input circuits	45...250 VDC	110...250 VDC
Current consumption	≤ 3 mA (typically 1.4 mA)	≤ 3 mA (typically 1.8 mA)
Output circuits	N-channel-Mosfet	N-channel-Mosfet
Switching voltage	≤ 250 VDC	≤ 250 VDC
Switching current/continuous current	≤ 200 mA	≤ 200 mA
Switching frequency	≤ 1 kHz	≤ 1 kHz
LED indication		
– Switching status	yellow	yellow
Housing	8-pole, 18 mm wide, Polycarbonate/ABS, flammability class V-0 per UL 94	
Mounting	snap-on clamps for top-hat rail (DIN 50022) or screw terminals for panel mounting	
Connection	via flat terminals with self-lifting pressure plates	
Connection profile	≤ 2 x 2.5 mm² or 2 x 1.5 mm² with wire sleeves	
Degree of protection (IEC 60529/EN 60529)	IP20	
Operating temperature	-25…+60 °C	

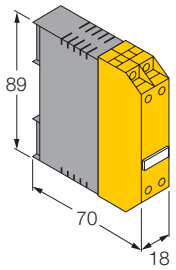

Hans Turck GmbH & Co.KG • D–45466 Mülheim/Ruhr • Tel. 0208/4952-0 • Fax 0208/4952-264 • E-Mail: turckmh@mail.turck-globe.de • www.turck.com

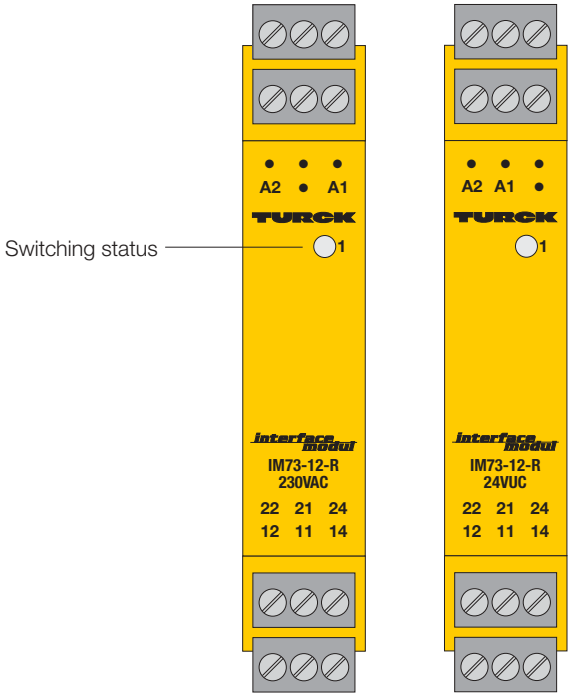

Relay Coupler
IM73-12-R/230VAC
IM73-12-R/24VUC
1-channel

- **1-channel relay coupler with safe galvanic isolation per VDE 0106**
- **Relay per VDE 0435**
- **2 SPDT relay outputs**
- **5 A switching current at 250 VAC**
- **Housing with removable terminal blocks**

The two single channel relay couplers type IM73-12-R/... are used to securely isolate binary signals.

Both couplers are equipped with two synchronised output relays with one SPDT contact each.

Depending on the type of device, the input may be either 24 VUC or 230 VAC.

A yellow LED on the front of the device indicates the switching status.

6

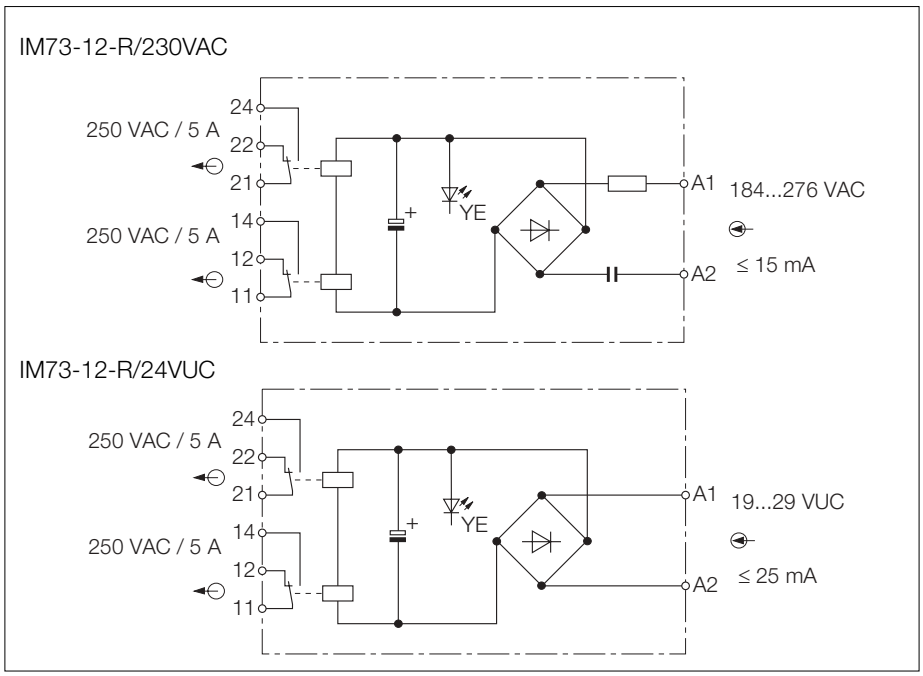

Relay Coupler IM73-12-R

Type	IM73-12-R/230VAC	IM73-12-R/24VUC
Ident-no.	7520511	7520512
Clearances and creepage distances		
– between the output relay circuits	8 mm/4 kV	8 mm/4 kV
– between input and contact circuit	8 mm/4 kV	8 mm/4 kV
Input circuits		
Input voltage	184...276 VAC	19...29 VUC
Input current	≤ 15 mA	≤ 25 mA
Output circuits	2 relays, each 1 SPDT contact	2 relays, each 1 SPDT contact
Switching voltage	≤ 250 V	≤ 250 V
Switching current/continuous current	≤ 5 A	≤ 5 A
Switching capacity AC	≤ 2000 VA	≤ 2000 VA
Switching capacity DC	≤ 180 W	≤ 180 W
Switching frequency	5 Hz	5 Hz
Contact material	silver-alloy + 3 µm Au	silver-alloy + 3 µm Au
LED indication		
– Switching status	yellow (in the input circuit)	yellow (in the input circuit)
Housing	12-pole, 18 mm wide, Polycarbonate/ABS, flammability class V-0 per UL 94	
Mounting	snap-on clamps for top-hat rail (DIN 50022) or screw terminals for panel mounting	
Connection	removable terminal blocks, reverse polarity protected, screw terminals, self-lifting	
Connection profile	≤ 1 x 2.5 mm², 2 x 1.5 mm² or 2 x 1.0 mm² with wire sleeves	
Degree of protection (IEC 60529/EN 60529)	IP20	
Operating temperature	-25…+60 °C	

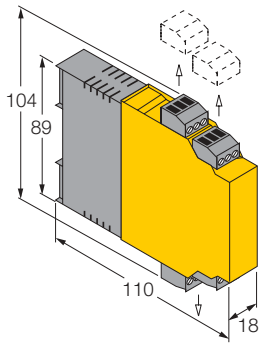

Hans Turck GmbH & Co.KG • D–45466 Mülheim/Ruhr • Tel. 0208/4952-0 • Fax 0208/4952-264 • E-Mail: turckmh@mail.turck-globe.de • www.turck.com

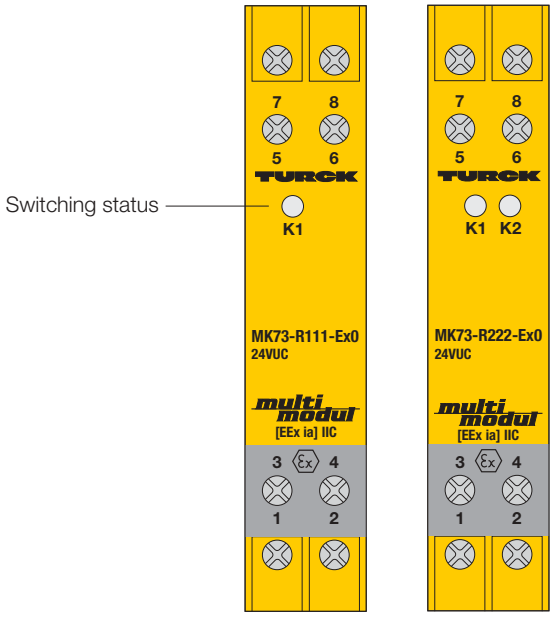

Relay Coupler MK73-R111-Ex0/24VUC MK73-R222-Ex0/24VUC 1-channel/2-channel

- **Relay couplers**
  MK73-R111-Ex0/...: 1-channel
  MK73-R222-Ex0/...: 2-channel
- **Intrinsically safe input circuits EEx ia**
- **Area of application according to ATEX: II (1) GD**
- **Relay coupler for switching of intrinsically safe circuits EEx ia**
- **Safe galvanic isolation of contact and control circuit according to EN 50020**
- **High quality reed relays with rhodium contacts**
- **Switching frequency up to 50 Hz**

The relay couplers MK73-R111-Ex0 and MK73-R222-Ex0 are designed to switch intrinsically safe circuits and feature safe galvanic isolation between contact and control circuit according to EN 50020.

The relay coupler is available in the following versions:

- Type MK73-R111-Ex0: single-channel with one SPDT contact
- Type MK73-R222-Ex0: two channels with one NO contact each

The switching status of the relays is indicated via front panel LEDs. The reed relay's switching frequency of 50 Hz is significantly higher than that of standard relays.

These kind of reed relays with rhodium contacts are suited for general control tasks, especially then, when standard types cannot be used due to the switching frequency requirements and the admissible contact ratings.

6

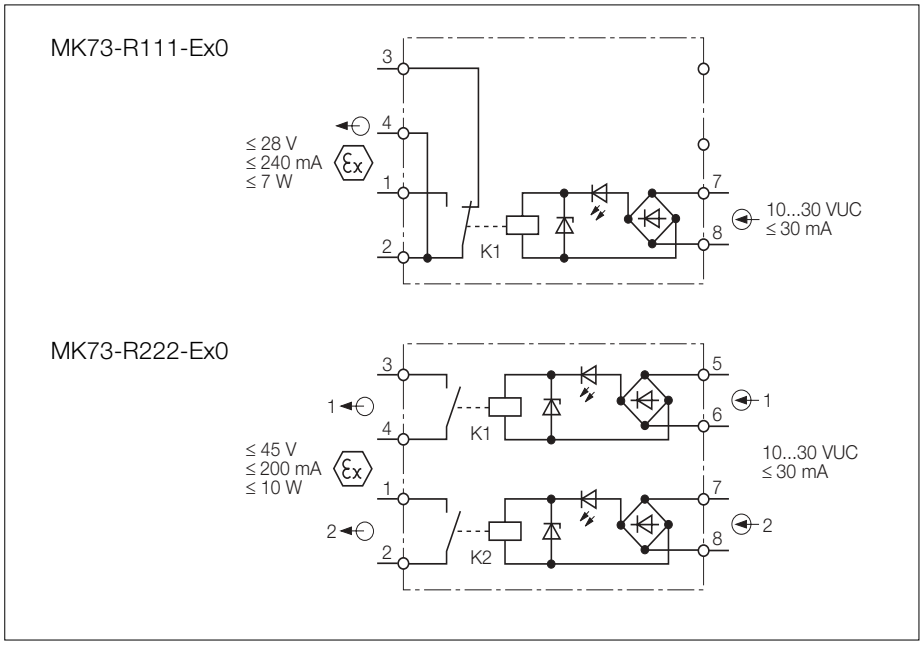

Relay Coupler MK73-R111/222-Ex0

Type	MK73-R111-Ex0/24VUC	MK73-R222-Ex0/24VUC
Ident.-no.	7521001	7521002
Clearances and creepages	safe galvanic isolation to EN50020; A2	safe galvanic isolation to EN50020; A2
Between control and contact circuit	≤ 375 V peak value	≤ 375 V peak value
Between two contact circuits	–	≤ 90 V peak value
Input circuit		
Input voltage	10…30 VUC	10…30 VUC
Input current	≤ 30 mA	≤ 30 mA per channel
Output circuits	reed relay for switching of intrinsically safe circuits EEX ia II C	reed relay for switching of intrinsically safe circuits EEX ia II C
Switching voltage	≤ 28 V	≤ 45 V
Switching current/continuous current	≤ 240 mA	≤ 200 mA
Switching capacity	≤ 7 W	≤ 10 W
Switching frequency	≤ 50 Hz	50 Hz
Contact configuration	1 SPDT contact	2 NO contacts
Contact material	rhodium	rhodium
Ex-approval acc. to certificate of conformity	BVS 03 ATEX E335	BVS 03 ATEX E335
Max. values		
– Switching voltage U_i	< 28 VDC	< 45 VDC
– Switching current I_i	< 240 mA	< 200 mA
– Switching capacity P_i	7 W	10 W
Internal inductances/capacitances L_i/C_i	negligible	negligible
Marking of the Device	II (1) GD [EEx ia] IIC	II (1) GD [EEx ia] IIC
LED indications		
– Switching status	yellow	yellow
Housing	8 poles, 18 mm wide, Polycarbonatet/ABS, flammability class V-0 per UL94	
Mounting	snap-on hat rail (DIN 50022) or panel screw mounting	
Connection	flat terminals with self-lifting pressure plates	
Connection profile	≤ 2 x 2.5 mm² or 2 x 1.5 mm² with wire sleeves	
Degree of protection (IEC 60529/EN 60529)	IP20	
Operating temperature	-25…+60 °C	

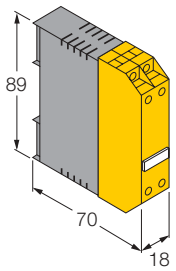

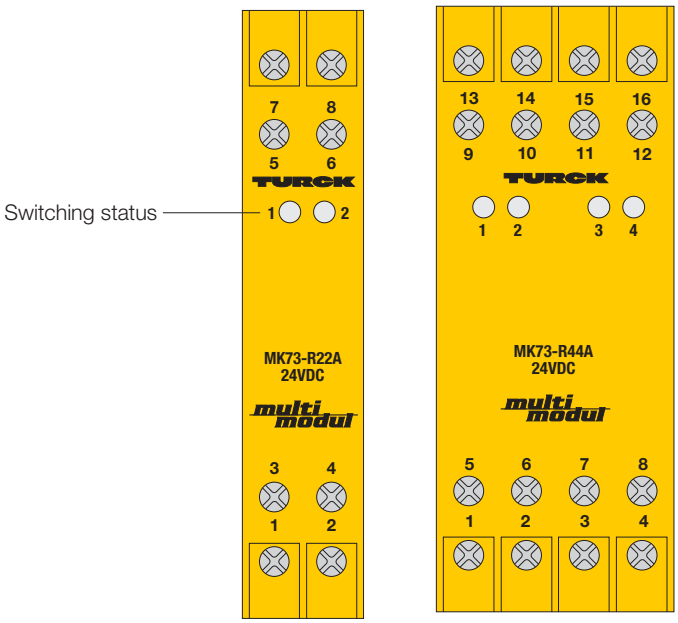

Interface Modules
MK73-R...E
MK73-R...A
MK73-T...E
MK73-T...A
MK73-Z...A
2-channel/4-channel

- **2-channel in 18 mm wide housings, 4-channel in 36 mm wide housings**
- **Reliable interface between different potentials**
- **Isolation per VDE 0106**
- **1 output per channel**
  R = NO relay
  T = transistor
  Z = triac

The couplers MK73-... are used to isolate and process binary signals in applications where a high component density is required.

Vertical isolation of up to 4 channels results in a 9 mm wide space per channel.

The couplers are designed as input couplers (type E) and output couplers (type A): input couplers have the input terminals on the bottom plane and output couplers have the output terminals on the bottom plane; i.e. the terminals for the control level are always on top, the terminals for the field level are always on the bottom.

This allows for a clear single level layout of the couplers by function.

The devices are available with relay, transistor or triac outputs to cover a wide variety of applications. Transistor outputs are short-circuit and reverse polarity protected.

By purposely eliminating an overload of technical options, these couplers have been designed to provide high operational integrity at a low cost which makes them an ideal interface at the best price/function ratio.

A comprehensive range of options are also available for special applications.

Yellow LEDs on the front of the device indicate the switching status.

Interface Modules MK73

Switching diagram, 1 channel

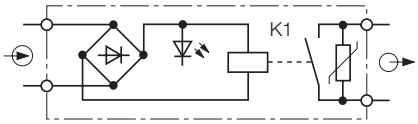

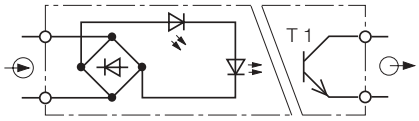

Connection diagram
2 channel coupler

channel	input 1	input 2	input 3	input 4	output 1	output 2	output 3	output 4
	1	2			5	6		
	3	4			7	8		

channel	input 1	input 2	input 3	input 4	output 1	output 2	output 3	output 4
	1	2			5	6		
	3	4			7	8		

Connection diagram
4 channel coupler

channel	input 1	input 2	input 3	input 4	output 1	output 2	output 3	output 4
	1	2	3	4	9	10	11	12
	5	6	7	8	13	14	15	16

channel	input 1	input 2	input 3	input 4	output 1	output 2	output 3	output 4
	1	2	3	4	9	10	11	12
	5	6	7	8	13	14	15	16

		Input coupler			
Output		**relay**		**transistor**	
Channels		2	4	2	4
Input voltage	12 V (± 20%)	MK73-R22E/12VUC	MK73-R44E/12VUC	MK73-T22E/12VDC	MK73-T44E/12VDC
	24 V (± 20%)	MK73-R22E/24VUC	MK73-R44E/24VUC	MK73-T22E/24VDC	MK73-T44E/24VDC
	30-120 VDC			MK73-T22E/60VDC	MK73-T44E/60VDC
	80-200 VAC			MK73-T22E/115VAC	MK73-T44E/115VAC
	130-250 VAC			MK73-T22E/230VAC	MK73-T44E/230VAC
Control current/channel		≤ 20 mA		≤ 10 mA	
Switching frequency					
DC version	[Hz]			20 k (10 k with 60 V version)	
UC version	[Hz]	5		20	
AC version	[Hz]				
Clearances and creepage distances					
Between control circuit and contacts		8 mm/4 kV		8 mm/4 kV	
Between contacts		4 mm/2 kV (output circuits)		4 mm/2 kV	
Output circuits		1 NO contact			
Switching voltage	(V)	250 V		40 VDC	
Switching current	(A)	2		0.11	
Switching capacity	(VA/W)	500/60			
Minimum current/leakage current	(mA)				
Voltage drop at maximum load	(V)			≤ 2 V	
Contact material		silver-alloy + 3 µm Au			
Contact protection		varistor			
Short-circuit and reverse polarity protection(A)				5 x $I_{nom,}$ yes	
"ON" delay		approx. 6 ms			
"OFF" delay		approx. 2 ms			
Mechanical life		30 x 10^6			
Electrical life		1 x 10^5			
Housing	(mm)	18	36	18	36
Dimensions (see page 14)		01	02	01	02

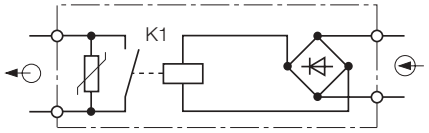

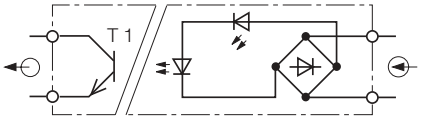

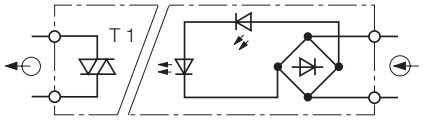

channel	input 1	input 2	input 3	input 4	output 1	output 2	output 3	output 4
	1	2			5	6		
	3	4			7	8		

channel	input 1	input 2	input 3	input 4	output 1	output 2	output 3	output 4
	1	2			5	6		
	3	4			7	8		

channel	input 1	input 2	input 3	input 4	output 1	output 2	output 3	output 4
	1	2			5	6		
	3	4			7	8		

channel	input 1	input 2	input 3	input 4	output 1	output 2	output 3	output 4
	1	2	3	4	9	10	11	12
	5	6	7	8	13	14	15	16

channel	input 1	input 2	input 3	input 4	output 1	output 2	output 3	output 4
	1	2	3	4	9	10	11	12
	5	6	7	8	13	14	15	16

channel	input 1	input 2	input 3	input 4	output 1	output 2	output 3	output 4
	1	2	3	4	9	10	11	12
	5	6	7	8	13	14	15	16

	Output coupler					
	relay		transistor		triac	
	2	4	2	4	2	4
	MK73-R22A/12VUC	MK73-R44A/12VUC	MK73-T22A/12VDC	MK73-T44A/12VDC	MK73-Z22A/12VDC	MK73-Z44A/12VDC
	MK73-R22A/24VUC	MK73-R44A/24VUC	MK73-T22A/24VDC	MK73-T44A/24VDC	MK73-Z22A/24VDC	MK73-Z44A/24VDC
			MK73-T22A/60VDC	MK73-T44A/60VDC	MK73-Z22A/60VDC	MK73-Z44A/60VDC
			MK73-T22A/115VAC	MK73-T44A/115VAC	MK73-Z22A/115VAC	MK73-Z44A/115VAC
			MK73-T22A/230VAC	MK73-T44A/230VAC	MK73-Z22A/230VAC	MK73-Z44A/230VAC
	≤ 20 mA		≤ 10 mA		≤ 10 mA	
			20 k (10 k with 60 V version)		20	
	5					
			20		20	
	8 mm/4 kV		8 mm/4 kV		8 mm/4 kV	
	4 mm/2 kV		4 mm/2 kV		4 mm/2 kV	
	250 V		40 VDC (80 VDC version .../K20)		250 VAC	
	2		0.1 (1 A version .../K20)		0.3 A_{rms}	
	500/60					
					1.5 mA	
			≤ 2 V			
	silver-alloy + 3 µm Au					
	varistor					
			5 x I_{nom}, yes			
	approx. 6 ms					
	approx. 2 ms					
	30 x 10^6					
	1 x 10^5					
	18	36	18	36	18	36
	01	02	01	02	01	02

6

Interface Modules MK73

Dimension drawings
01

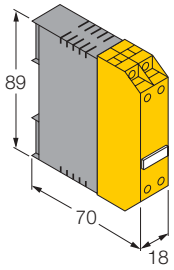

Housing	8-pole, 18 mm wide, Polycarbonate/ABS flammability class V-0 per UL 94
Mounting	snap-on clamps for top-hat rail (DIN 50022) or screw terminals for panel mounting
Connection	via flat terminals with self-lifting pressure plates
Connection profile	≤ 2 x 2.5 mm² or 2 x 1.5 mm² with wire sleeves
Degree of protection (IEC 60529/EN 60529)	IP20
Operating temperature	-25...+60 °C

02

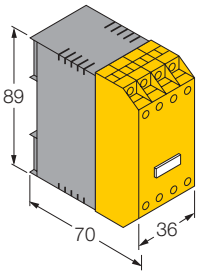

Housing	16-pole, 36 mm wide, Polycarbonate/ABS flammability class V-0 per UL 94
Mounting	snap-on clamps for top-hat rail (DIN 50022) or screw terminals for panel mounting
Connection	via flat terminals with self-lifting pressure plates with wire sleeves
Connection profile	≤ 2 x 2.5 mm² or 2 x 1.5 mm² with wire sleeves
Degree of protection (IEC 60529/EN 60529)	IP20
Operating temperature	-25...+60 °C

Relay coupler	Ident-no.	**Transistor coupler**	Ident-no.	**Triac coupler**	Ident-no.
MK73-R22A/12VUC	7530022	MK73-T22A/12VDC	7530122	MK73-Z22A/12VDC	7530222
MK73-R22A/24VUC	7530024	MK73-T22A/24VDC	7530124	MK73-Z22A/24VDC	7530224
MK73-R22E/12VUC	7530002	MK73-T22A/60VDC	7530125	MK73-Z22A/60VDC	7530225
MK73-R22E/24VUC	7530004	MK73-T22A/60VUC	7530131	MK73-Z22A/115VAC	7530226
MK73-R44A/12VUC	7530062	MK73-T22A/115VAC	7530126	MK73-Z22A/230VAC	7530228
MK73-R44A/24VUC	7530064	MK73-T22A/230VAC	7530128	MK73-Z44A/12VDC	7530242
MK73-R44E/12VUC	7530042	MK73-T22A/24VDC/K20	7530134	MK73-Z44A/24VDC	7530244
MK73-R44E/24VUC	7530044	MK73-T22A/60VDC/K20	7530135	MK73-Z44A/60VDC	7530245
		MK73-T22A/115VAC/K20	7530136	MK73-Z44A/115VAC	7530246
		MK73-T22A/230VAC/K20	7530138	MK73-Z44A/230VAC	7530248
		MK73-T22E/12VDC	7530102		
		MK73-T22E/24VDC	7530104		
		MK73-T22E/60VDC	7530111		
		MK73-T22E/115VAC	7530106		
		MK73-T22E/230VAC	7530108		
		MK73-T44A/12VDC	7530162		
		MK73-T44A/24VDC	7530164		
		MK73-T44A/60VDC	7530165		
		MK 73-T44A/115VAC	7530166		
		MK 73-T44A/230VAC	7530168		
		MK 73-T44E/12VDC	7530142		
		MK 73-T44E/24VDC	7530144		
		MK 73-T44E/60VDC	7530145		
		MK 73-T44E/115VAC	7530146		
		MK 73-T44E/230VAC	7530148		

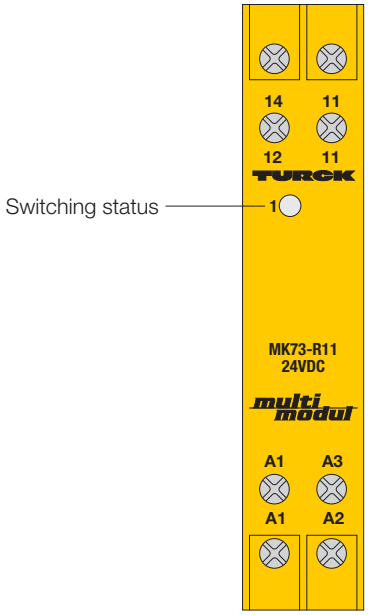

Relay Coupler MK73-R11/230VAC 1-channel

- **1-channel relay coupler**
- **Relay conforming to VDE 0435**
- **For 24 VAC/DC or 230 VAC input**
- **Switching current ≤ 3 A**
- **Varistor protected output contacts**
- **Hard gold plated contacts**
- **Galvanic isolation according to VDE 0106**

The MK73-R11/... single channel relay coupler provides reliable galvanic isolation between the contact and control current circuit (8 mm/4 kV).

Both contacts are protected by varistors. Silver-alloy contacts with hard gold plating allow the relay to be used for standard control as well as for power applications.

Input may be either 24 VAC/DC or 230 VAC.

A yellow LED on the front of the device indicates the switching status.

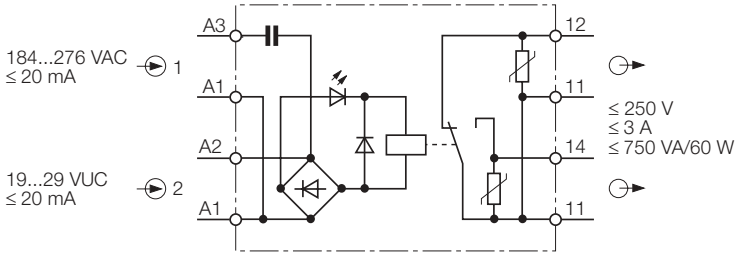

6

Relay Coupler MK73-R11

Type	MK73-R11
Ident-no.	75201
Clearances and creepage distances	
Between input and contact circuit	8 mm/4 kV
Input circuits	
Input A1 and A3	
– Input voltage	184...276 VAC
– Input current	≤ 20 mA
Input A1 and A2	
– Input voltage	19...29 VUC
– Input current	≤ 20 mA
Output circuits	relay output (SPDT contact)
Switching voltage	≤ 250 V per VDE 0110, Group C
Switching current/continuous current	≤ 3 A
Switching capacity	≤ 750 VA/60 W
Switching frequency	5 Hz
Contact material	silver-alloy + 3 µm Au
Contact protection	with varistors
LED indication	
– Switching status	yellow (in the input circuit)
Housing	8-pole, 18 mm wide, Polycarbonate/ABS, flammability class V-0 per UL 94
Mounting	snap-on clamps for top-hat rail (DIN 50022) or screw terminals for panel mounting
Connection	via flat terminals with self-lifting pressure plates
Connection profile	≤ 2 x 2.5 mm² or 2 x 1.5 mm² with wire sleeves
Degree of protection (IEC 60529/EN 60529)	IP20
Operating temperature	-25…+60 °C

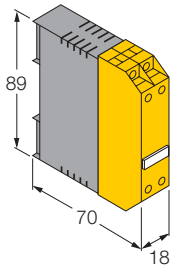

 Hans Turck GmbH & Co.KG • D–45466 Mülheim/Ruhr • Tel. 0208/4952-0 • Fax 0208/4952-264 • E-Mail: turckmh@mail.turck-globe.de • www.turck.com

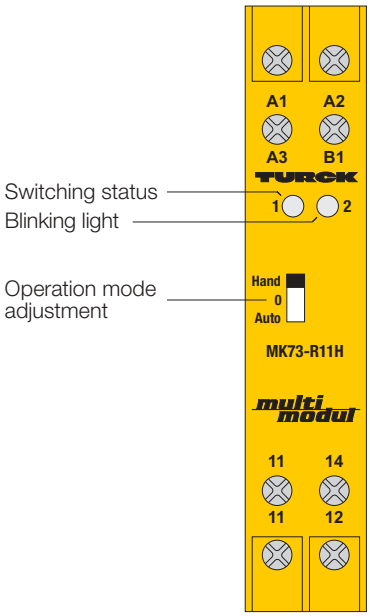

Relay Coupler MK73-R11H/24VUC 1-channel

- **1-channel relay coupler**
- **Relay conforming to VDE 0435**
- **Switching current ≤ 3 A**
- **Switching voltage ≤ 250 V**
- **Galvanic isolation according to VDE 0106**
- **Universal supply voltage**

The single channel MK73-R11H/... relay coupler features three different operation modes:

1. Standard operation: A 3
2. Manual operation: power supply on A2 and input via the switch (H) located on the front of the device.
3. Off: switch in the front set to 0, no external input is possible.

In addition, an integrated blinking light may be operated for all functions via input 1. The blinking light is independent from the relay input.

A yellow LED on the front of the device indicates the switching status.

Typical applications are in the range of air-conditioning and ventilation systems, where drives must frequently be switched on and off manually.

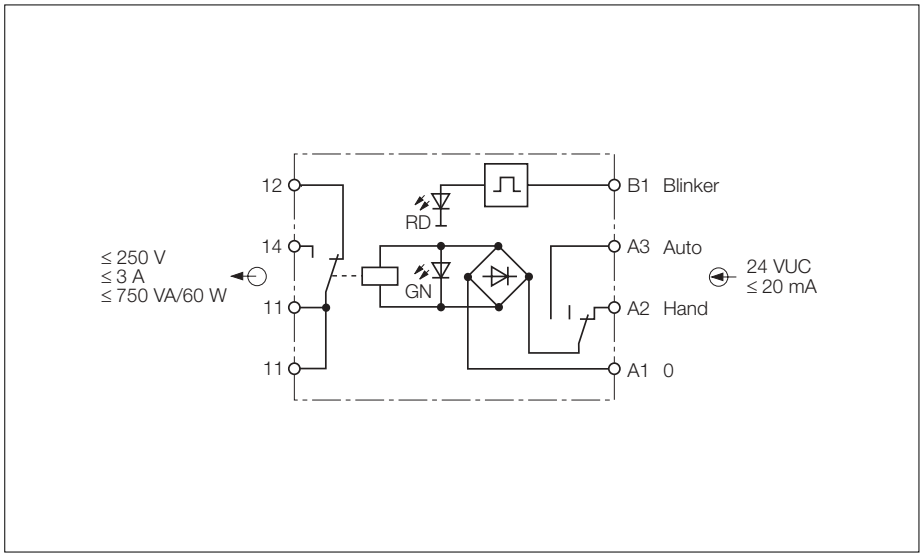

6

Relay Coupler MK73-R11H

Type	MK73-R11H/24VUC
Ident-no.	7520120
Clearances and creepage distances	
Between input and contact circuit	8 mm/4 kV
Input circuits	
Power supply during manual operation	24 VUC
Input (A2, A3 und B1)	
– Nominal input voltage	24 VUC
Current consumption	≤ 20 mA
Output circuits	1 relay, 1 SPDT contact
Switching voltage	≤ 250 V
Switching current/continuous current	≤ 3 A
Switching capacity	≤ 750 VA/60 W
Contact material	silver-alloy + 3 µm Au
Switching frequency	≤ 5 Hz
LED indications	
– Switching status	yellow
– Blinking light	red
Housing	8-pole, 18 mm wide, Polycarbonate/ABS, flammability class V-0 per UL 94
Mounting	snap-on clamps for top-hat rail (DIN 50022) or screw terminals for panel mounting
Connection	via flat terminals with self-lifting pressure plates
Connection profile	≤ 2 x 2.5 mm² or 2 x 1.5 mm² with wire sleeves
Degree of protection (IEC 60529/EN 60529)	IP20
Operating temperature	-25…+60 °C

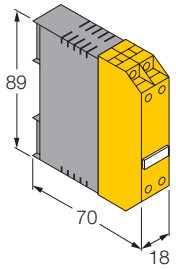

 Hans Turck GmbH & Co.KG • D–45466 Mülheim/Ruhr • Tel. 0208/4952-0 • Fax 0208/4952-264 • E-Mail: turckmh@mail.turck-globe.de • www.turck.com

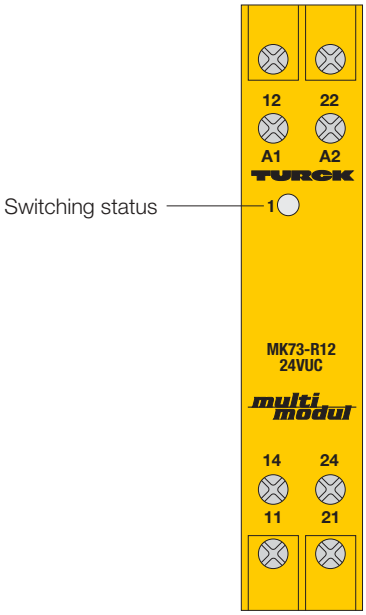

Relay Couplers
MK73-R12/24VUC
MK73-R12/230VAC
1-channel

- **1-channel relay coupler**
- **Relay conforming to VDE 0435**
- **2 SPDT relay outputs**
- **5 A switching current at 230 VAC**

The MK73-R12… single channel relay couplers are especially suited for use as interface modules.

Each of the couplers has two SPDT relay outputs.

Depending on the type of the device, the input may be either 24 VUC or 230 VAC.

A yellow LED on the front of the device indicates the switching status.

6

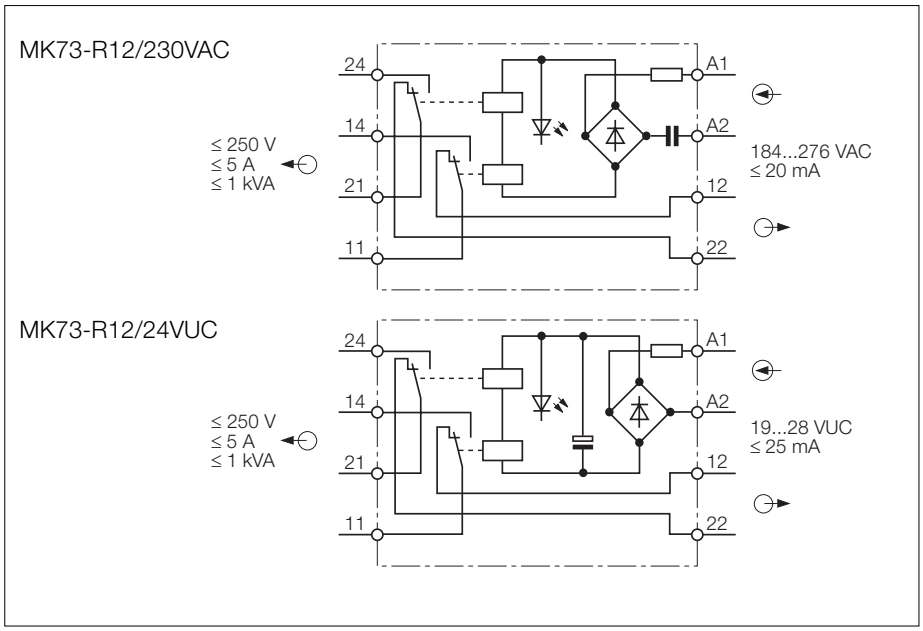

Relay Couplers MK73-R12

Type	MK73-R12/230VAC	MK73-R12/24VUC
Ident-no.	75205	75207
Clearances and creepage distances		
Between input and contact circuit	4 mm/2 kV	4 mm/2 kV
Input circuits		
Input voltage	184...276 VAC	19...28 VUC
Input current	≤ 20 mA	≤ 25 mA
Output circuits	2 relays, each1 SPDT contact	2 relays, each 1 SPDT contact
Switching voltage	≤ 250 V	≤ 250 V
Switching current/continuous current	≤ 5 A	≤ 5 A
Switching capacity AC	≤ 1 kVA	≤ 1 kVA
Switching capacity DC	see diagram	see diagram
Switching frequency	5 Hz	5 Hz
Contact material	silver-alloy + 3 µm Au	silver-alloy + 3 µm Au
LED indication		
– Switching status	yellow (in the control circuit)	yellow (in the control circuit)
Housing	8-pole, 18 mm wide, Polycarbonate/ABS, flammability class V-0 per UL 94	
Mounting	snap-on clamps for top-hat rail (DIN 50022) or screw terminals for panel mounting	
Connection	via flat terminals with self-lifting pressure plates	
Connection profile	≤ 2 x 2.5 mm² or 2 x 1.5 mm² with wire sleeves	
Degree of protection (IEC 60529/EN 60529)	IP20	
Operating temperature	-25…+60 °C	

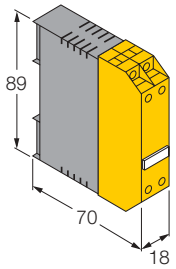

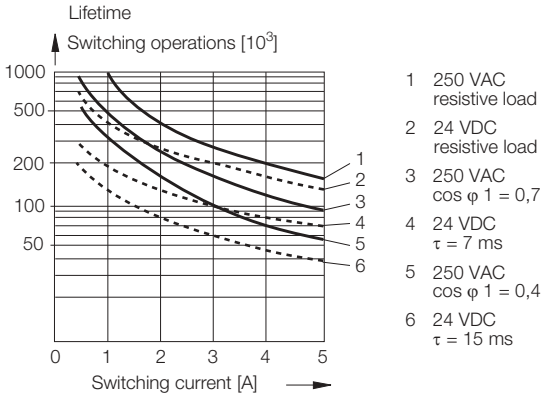

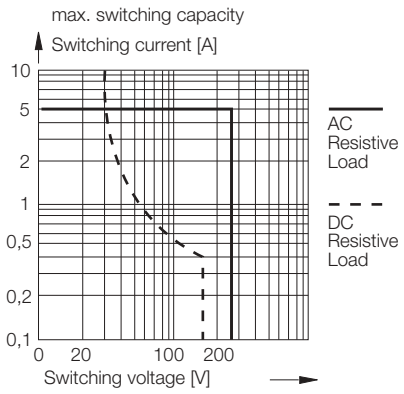

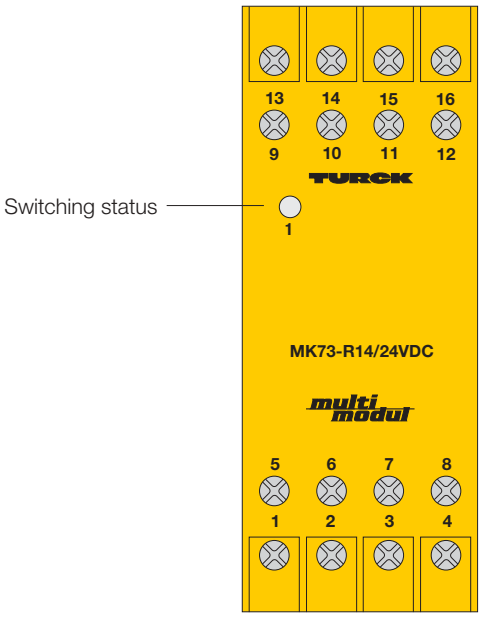

Relay Coupler MK73-R14/24VUC 1-channel

- **1-channel relay coupler**
- **Two relay outputs each with two SPDTs**
- **Relay according to VDE 0435**
- **24 VUC input**
- **Switching current ≤ 2 A**
- **Minimum switching current 10 µA**
- **Hard gold plated contacts**
- **Universal supply voltage**

The single channel device MK73-R14/... is designed to switch low currents, e.g. Pt100 signals.

Silver-alloy contacts with hard gold plating enable to use the relay for standard control as well as for power applications.

The coupler output features two synchronously controlled relays with two SPDTs each.

If currents higher than 25 mA are switched, the gold plating of the contacts may be damaged. Consequently, low level signals cannot be switched reliably.

The devices are suited for 24 VUC input signals.

A yellow LED on the front of the device indicates the switching status.

6

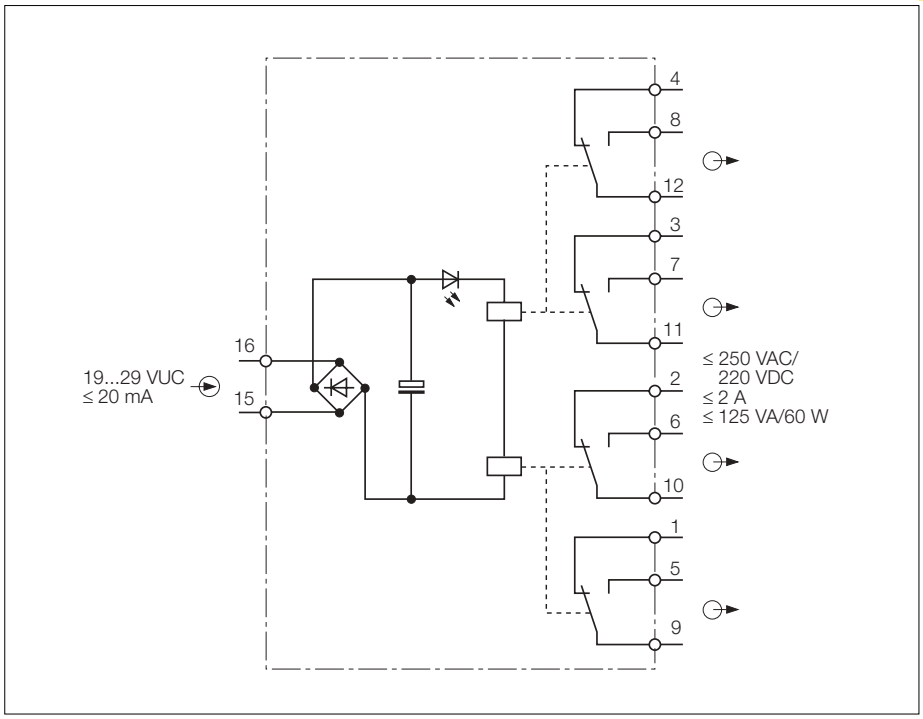

Relay Coupler MK73-R14

Type	MK73-R14/24VUC
Ident-no.	7520807
Clearances and creepage distances	
Test voltage input/output	1.5 kV
Input circuits	
Input	
– Input voltage	19...29 VUC
– Input current	≤ 20 mA
Output circuits	1 relay, 4 SPDT contacts
Switching voltage	≤ 250 VAC /220 VDC per VDE 0110, Group C
Switching current/continuous current	≤ 2 A
Switching capacity	≤ 125 VA/60 W
Switching capacity min.	10 µA/30 mV
Contact resistance	50 mΩ (initial)
Switching frequency	5 Hz
Contact material	silver-alloy + 3 µm Au
LED indication	
– Switching status	yellow (in the control circuit)
Housing	16-pole, 36 mm wide, Polycarbonate/ABS flammability class V-0 per UL 94
Mounting	snap-on clamps for top-hat rail (DIN 50022) or screw terminals for panel mounting
Connection	via flat terminals with self-lifting pressure plates
Connection profile	≤ 2 x 2.5 mm² or 2 x 1.5 mm² with wire sleeves
Degree of protection (IEC 60529/EN 60529)	IP20
Operating temperature	-25...+60 °C

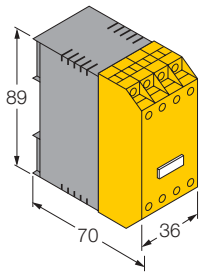

 Hans Turck GmbH & Co.KG • D–45466 Mülheim/Ruhr • Tel. 0208/4952-0 • Fax 0208/4952-264 • E-Mail: turckmh@mail.turck-globe.de • www.turck.com

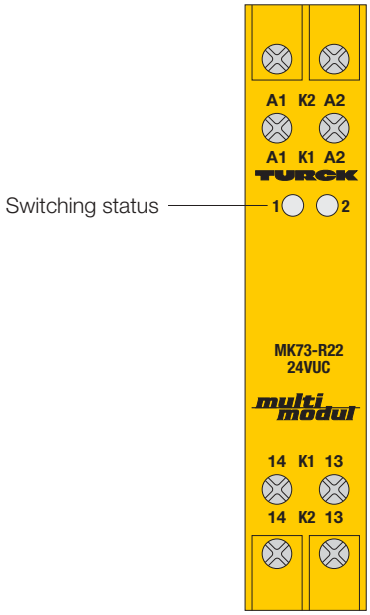

Relay Coupler MK73-R22/24VUC 2-channel

- **2-channel relay coupler**
- **Reliable interface between different voltages**
- **1 NO contact per channel**
- **2 channels in an 18 mm wide housing**
- **Universal supply voltage**

The dual channel coupler MK73-R22/... is primarily used for applications requiring high component density.

The coupler output features a relay with a NO contact for each channel.

Yellow LEDs on the front of the device indicate the switching status.

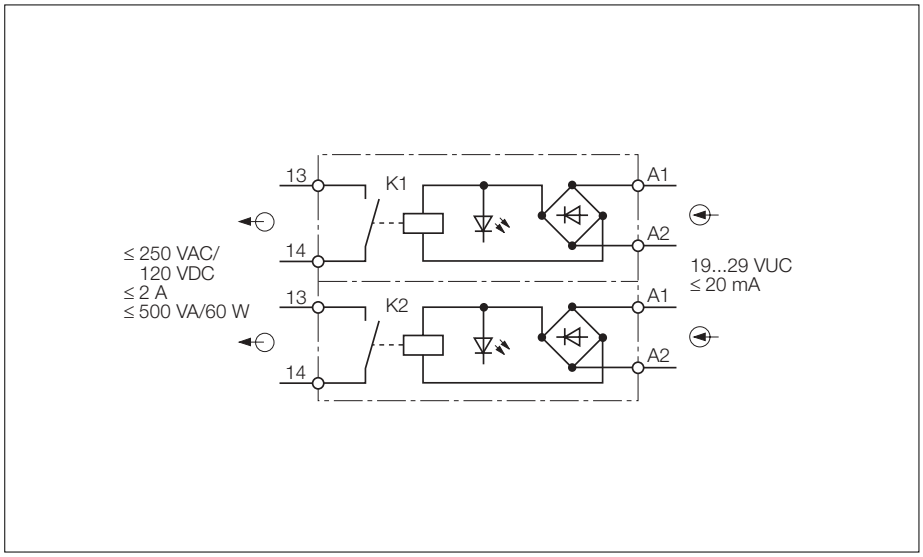

Relay Coupler MK73-R22

Type	MK73-R22
Ident-no.	75200
Clearances and creepage distances	
Between input and contact circuit	8 mm/4 kV
Between output circuits	4 mm/2 kV
Input circuits	
Input voltage	19...29 VUC
Input current	≤ 20 mA
Output circuits	relay output (double contacts, NO contact)
Switching voltage	≤ 250 V
Switching current/continuous current	≤ 2 A
Switching capacity	≤ 500 VA/60 W
Switching frequency	5 Hz
Contact material	silver-alloy + 3 µm Au
LED indications	
– Switching status contact 1	yellow
– Switching status contact 2	yellow
Housing	8-pole, 18 mm wide, Polycarbonate/ABS, flammability class V-0 per UL 94
Mounting	snap-on clamps for top-hat rail (DIN 50022) or screw terminals for panel mounting
Connection	via flat terminals with self-lifting pressure plates
Connection profile	≤ 2 x 2.5 mm² or 2 x 1.5 mm² with wire sleeves
Degree of protection (IEC 60529/EN 60529)	IP20
Operating temperature	-25…+60 °C

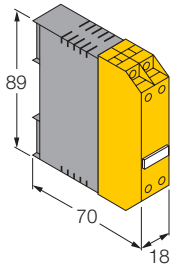

 Hans Turck GmbH & Co.KG • D–45466 Mülheim/Ruhr • Tel. 0208/4952-0 • Fax 0208/4952-264 • E-Mail: turckmh@mail.turck-globe.de • www.turck.com

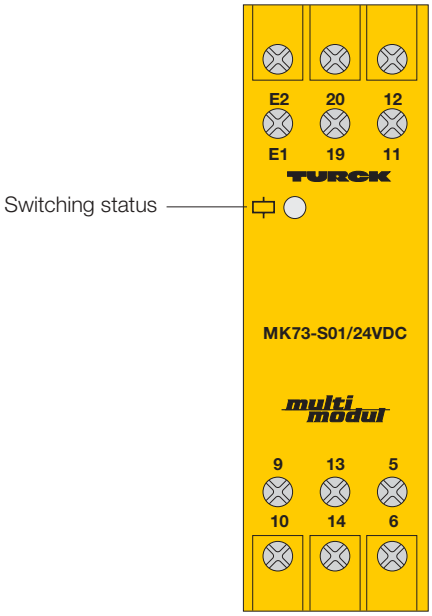

Safety Relay Coupler MK73-S01/24VDC 1-channel

- **1-channel safety relay coupler**
- **Tested safety relay with forced guided contacts in conformance with ZH 1/457**
- **Output circuit with 3 NO and 2 NC contacts**
- **Relay clearances and creepages per VDE 0110, Isolation Group C 250 VAC/300 VDC**

A forced guided contact pair consists of one NO and one NC contact tied to a common mechanical actuator. This configuration ensures that the NO and NC contact cannot be closed simultaneously. If one of the contacts welds, the paired contact remains forced open, regardless of the input state.

The following sets of contacts are forced guided:
– 5/6 and 13/14
– 11/12 and 19/20

In addition to the two sets of forced guided contacts, NO contacts 9/10 are also available.

Welding of NO contacts 13/14 or 19/20 forces the corresponding NC contact to stay open, without disabling the other pair of contacts. But if one of the NC contacts 5/6, 9/10 or 11/12 welds, the armature would be blocked, forcing the other contact pair(s) to remain fixed.

This type of operation corresponds to the regulations for forced guided operation.

By connecting an external monitoring device to the output circuit, it is possible to detect both the type and location of a failure.

The internal relay's forced guided contact configuration is prototype-tested by TÜV and approved by UL, SEV, and SUVA. Each contact spring has its own chamber, ensuring circuit isolation even if spring breakage occurs.

There are no return springs used, thereby eliminating the hazardous „intermediate" position, which is common in other safety relays, following contact spring breakage.

A yellow LED on the front of the device indicates the switching status.

6

The MK73-S01/... coupler features an internal SF4 safety relay manufactured by SDS and forced guided contacts for enhanced control reliability. The output consists of three NO and two NC contacts.

The forced guided operation of the two sets of contacts enables this relay to be used in two-hand control applications such as presses. This type of operation is mandated by occupational safety standards and regulations.

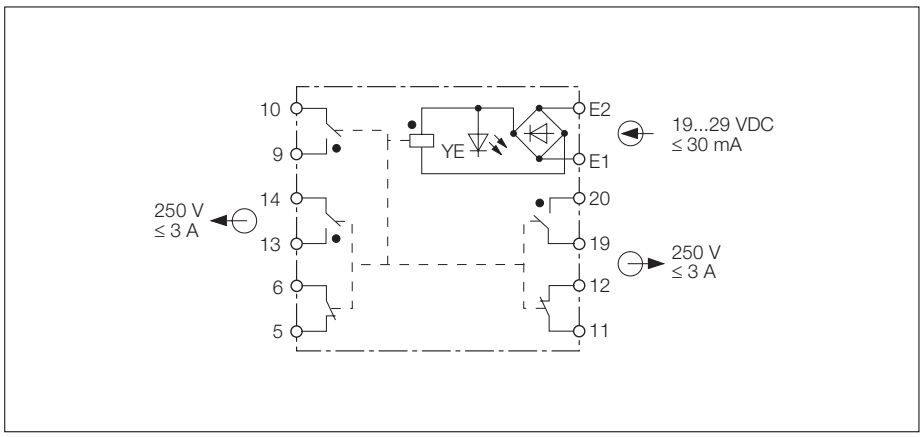

Safety Relay Coupler MK73-S01

Type	MK73-S01/24VDC
Ident-no.	7524005
Clearances and creepage distances	
– Between input and contact circuit	4 mm/2.5 kV
– Between contact circuits	4 mm/2.5 kV
Input circuit	
Input voltage	19...29 VDC
Input current	≤ 30 mA
Output circuits	forced guided contact pairs
Switching voltage	≤ 250 VUC
Switching current	≤ 3 A (when all contacts are used) ≤ 6 A (when two contacts are used)
Switching capacity	≤ 100 W/1000 VA
Switching frequency	≤ 5 Hz
Contact material	silver-alloy + 3 µm Au
Electrical life	4 x 10^5 operations
Mechanical life	10^7 operations
LED indication	
– Switching status	yellow
Housing	12-pole, 27 mm wide, Polycarbonate/ABS, flammability class V-0 per UL 94
Mounting	snap-on clamps for top-hat rail (DIN 50022) or screw terminals for panel mounting
Connection	via flat terminals with self-lifting pressure plates
Connection profile	≤ 2 x 2.5 mm² or 2 x 1.5 mm² with wire sleeves
Degree of protection (IEC 60529/EN 60529)	IP20
Operating temperature	-25…+60 °C

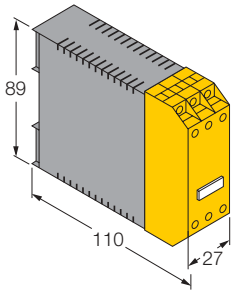

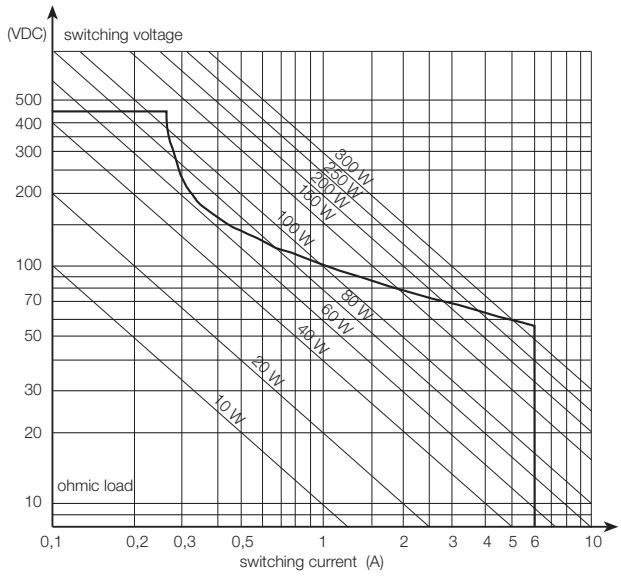

The curved line indicates the maximum safe switching levels at which arcing subsides prior to closing of the paired contact (important when NO and NC contacts are at unequal potentials).

Do not exceed the rated switching voltage and current.

 Hans Turck GmbH & Co.KG • D–45466 Mülheim/Ruhr • Tel. 0208/4952-0 • Fax 0208/4952-264 • E-Mail: turckmh@mail.turck-globe.de • www.turck.com

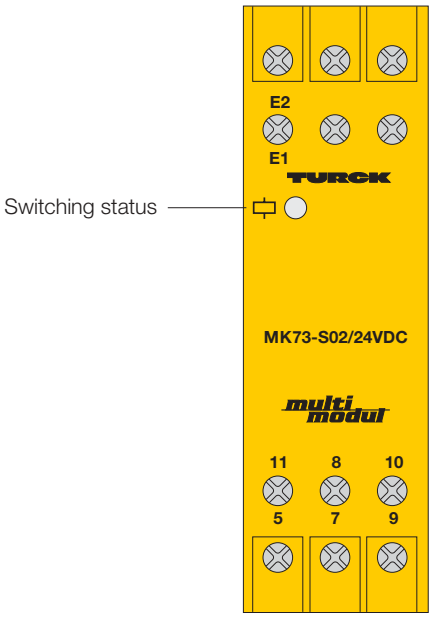

Safety Relay Coupler MK73-S02/24VDC 1-channel

- **1-channel safety relay coupler**
- **Tested safety relay with forced guided contacts in conformance with ZH 1/457**
- **Output circuit with 2 NO and 2 NC contacts**
- **Relay according to VDE 0110 Pollution degree 3/250 V Overvoltage category III/300 V**

Forced guided contacts consist of one NO and one NC contact linked to a common mechanical actuator. This configuration ensures that the NO and NC contacts cannot be closed simultaneously. If one of the contacts welds, the paired contact remains forced open, regardless of the input state.

Forced guidance always applies to one NC contact and one NO contact as shown in the block diagram. Internally, the two NC contacts are connected in series.

Contact welding of one or two of the NO contacts keeps both NC contacts securely and durably open. Contact welding of one NO contact does not affect performance of the second NO contact.

An external monitoring device enables fault detection.

The internal relay's forced guided contact configuration is TÜV-prototype-tested and approved by UL, SEV, SUVA. Each contact spring has its own chamber, ensuring circuit isolation even if contact spring breakage occurs.

There are no return springs used, thereby eliminating the hazardous "intermediate" position, which is common in other safety relays, following contact spring breakage.

A yellow LED indicates the switching status.

6

The safety relay coupler MK73-S02/... is internal equipped with a forced guided safety relay manufactured by SDS, type SF2. The output consists of two NO and two NC contacts.

The forced guided operation of the two sets of contacts allows this relay to be used in two-hand control applications such as presses. This type of operation is mandated by the occupational safety standards and regulations.

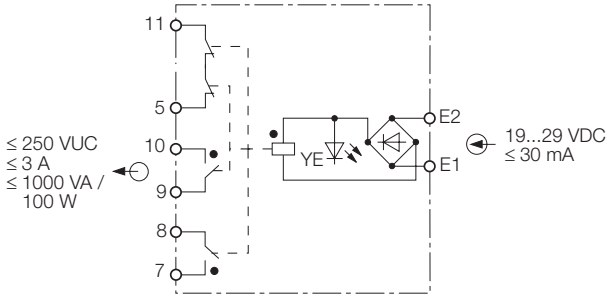

Safety Relay Coupler MK73-S02

Type	MK73-S02/24VDC
Ident-no.	7524010
Clearances and creepage distances	
– Between input and contact circuit	4 mm/2.5 kV
– between contact circuits	4 mm/2.5 kV
Input circuits	
Input voltage	19...29 VDC
Input current	≤ 30 mA
Output circuits	forced guided contact pairs
Switching voltage	≤ 250 VUC
Switching current	≤ 3 A (when all contacts are used) ≤ 6 A (when two contacts are used)
Switching capacity	≤ 100 W/1000 VA
Switching frequency	≤ 5 Hz
Contact material	silver-alloy + 3 µm Au
Electrical life	4 x 10^5 operations
Mechanical life	10^7 operations
LED indication	
– Switching status	yellow
Housing	12-pole, 27 mm wide, Polycarbonate/ABS, flammability class V-0 per UL 94
Mounting	snap-on clamps for top-hat rail (DIN 50022) or screw terminals for panel mounting
Connection	via flat terminals with self-lifting pressure plates
Connection profile	≤ 2 x 2.5 mm² or 2 x 1.5 mm² with wire sleeves
Degree of protection (IEC 60529/EN 60529)	IP20
Operating temperature	-25…+60 °C

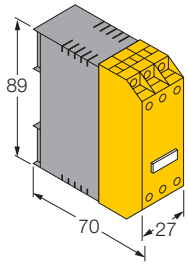

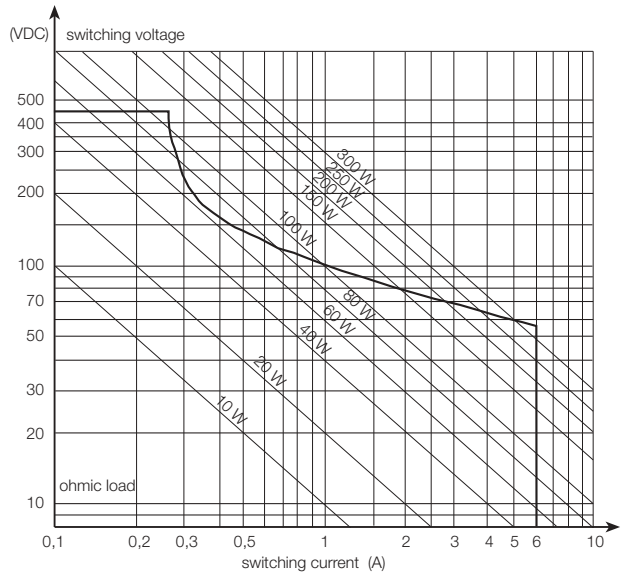

The curved line indicates the maximum safe switching level at which arcing subsides prior to closing of the paired contact (important when NO and NC contacts are at unequal potentials).

The indicated switching voltage and current may not be exceeded.

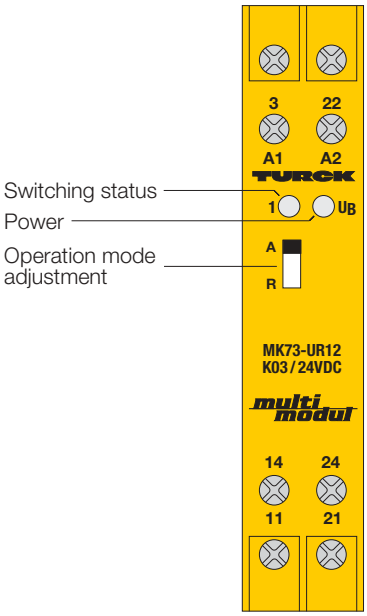

Relay Coupler MK73-UR12/K03/24VDC 1-channel

- **1-channel relay coupler**
- **Relay per VDE 0435**
- **Inexpensive relay coupler for NAMUR sensors according to EN 60947-5-6**
- **Programmable NO/NC output function**

The MK73-UR12/K03 relay coupler is designed specifically for use in conjunction with NAMUR type proximity sensors. It is a low cost alternative to switching amplifiers, if intrinsically safe protection is not required.

The output performance (normally open or normally closed mode) of the relay is selected by means of the switch "A-R" on the front of the device.

The output consists of an SPDT contact and a NO contact.

A yellow LED indicates the switching status of the relay; a green LED indicates that the device is powered.

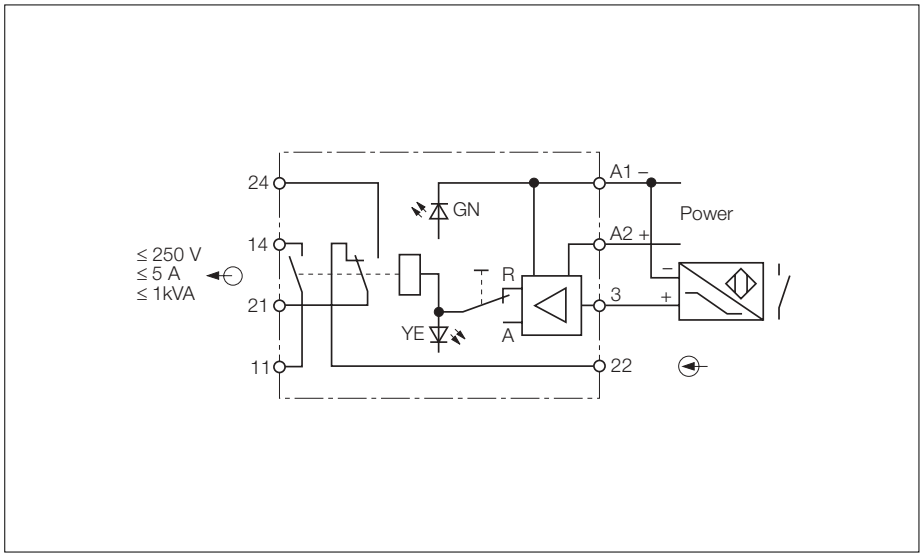

Relay Coupler MK73-UR12/K03

Type	MK73-UR12/K03/24VDC
Ident-no.	75203
Supply voltage U_B	19...29 VDC
Ripple W_{PP}	≤ 10 %
Current consumption	≤ 50 mA
Clearances and creepage Distances	
Between input and contact circuit	4 mm/2 kV
Input circuits	according to EN 60947-5-6 (NAMUR)
Operating characteristics	
– Input voltage	8 V
– Input current	8 mA
Switching threshold	1.55 mA
Hysteresis	0.2 mA
Output circuits	relay output (1 SPDT contact, 1 NO contact)
Switching voltage	≤ 250 V
Switching current/continuous current	≤ 5 A
Switching capacity AC	≤ 1 kVA
Switching capacity DC	see diagrams below
Switching frequency	5 Hz
Contact material	silver-alloy + 3 µm Au
LED indications	
– Power	green
– Switching status (in output circuit)	yellow
Housing	8-pole, 18 mm wide, Polycarbonate/ABS, flammability class V-0 per UL 94
Mounting	snap-on clamps for top-hat rail (DIN 50022) or screw terminals for panel mounting
Connection	via flat terminals with self-lifting pressure plates
Connection profile	≤ 2 x 2.5 mm² or 2 x 1.5 mm² with wire sleeves
Degree of protection (IEC 60529/EN 60529)	IP20
Operating temperature	-25…+60 °C

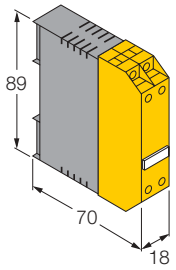

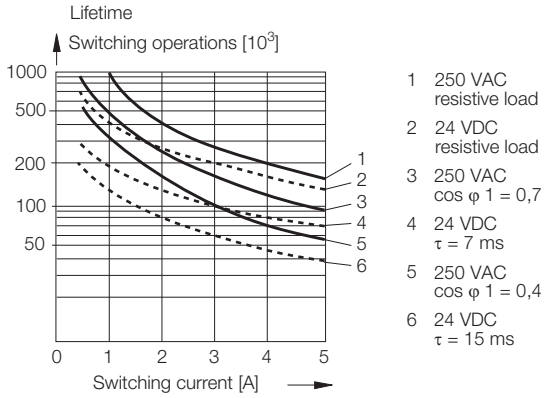

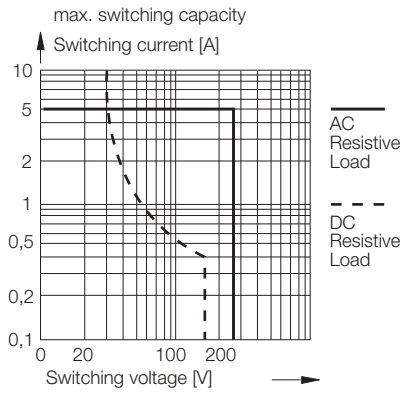

POWER SUPPLIES

POWER SUPPLIES

Power Supplies/Monitors Selection Guide

Housing Style
interfacemodul
multimodul
multisafe®
multicart®

Housing	interface modul					multi modul				multi safe®				multi cart®			
Type	IM82-2414					MK81-11-R	MK81-222-R	MK82-2401	MK83-U24	MS81-221-R	MS81-222-R	MS81-222-T		MC82-2425	MC82-2450	MC83-2SA1	MC83-4Si
Functions																	
Sensor power supply						●	●			●	●	●					
Amplifier relay						●	●			●	●	●					
Amplifier relay, bistable											●	●					
Stand-by power supply	●							●						●	●		
Voltage monitor									●								
Ripple monitor W_{PP}									●								
Diode isolating amplifier card																	
Circuit monitor																●	
Fuse monitor																	●
Number of channels						1	2		1	2	2	2				2	4
Output circuits																	
Relay, 1 SPDT contact									●	●	●					●	●
Transistor, potential-free												●					
Transistor output, pnp																	●
Relay outputs	1					1	2										
Output current																	
40 mA											●	●					
50 mA								●									
100 mA						●				●							
300 mA																	
700 mA																	
1.4 A	●																
2.5 A														●			
5 A															●		
Degree of protection	2													2	1		
Output voltage																	
12 V											●	●					
24 V	●					●		●		●					●	●	
Output function																	
Programmable – NO / NC										●	●	●					
Supply voltage																	
24 VDC							●		●								
115 VAC								●		●				●		●	●
230 VAC							●	●		●				●		●	●
94...265 VAC	●																
48...250 VUC						●											
Data sheet – see page	13					3	5	15	17	7	9	11		**catalogue *multicart®***			

Hans Turck GmbH & Co.KG • D–45466 Mülheim/Ruhr • Tel. 0208/4952-0 • Fax 0208/4952-264 • E-Mail: turckmh@mail.turck-globe.de • www.turck.com

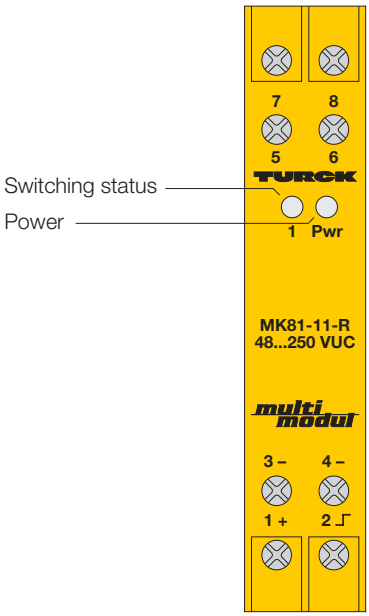

Amplifier Relay MK81-11-R/48...250VUC 1-channel

- **1-channel supply for 3-wire sensors**
- **Scanning and supply of 3-wire sensors (pnp)**
- **Sensor supply: 24 VDC with max. sensor curret of 100 mA, short-circuit and overload protected**
- **Relay output with NO contact**

The MK81-11-R/48...250VUC amplifier relay is suited for connection of 3-wire sensors (pnp).

The device features a universal supply for AC or DC operating voltages with a wide input voltage range from 48...250 VUC.

The short-circuit and overload protected sensor supply output is 24 VDC with a max. sensor current consumption of 100 mA.
The sensor current is reduced to 20 mA if the overload limit of 130 mA is exceeded or if there is a short-circuit.
The nominal voltage recovers as soon as the short-circuit is eliminated.

The output circuit features a relay with an NO contact

A green LED indicates that the device is powered. A yellow LED indicates the switching status of the output (LED on - relay energised).

7

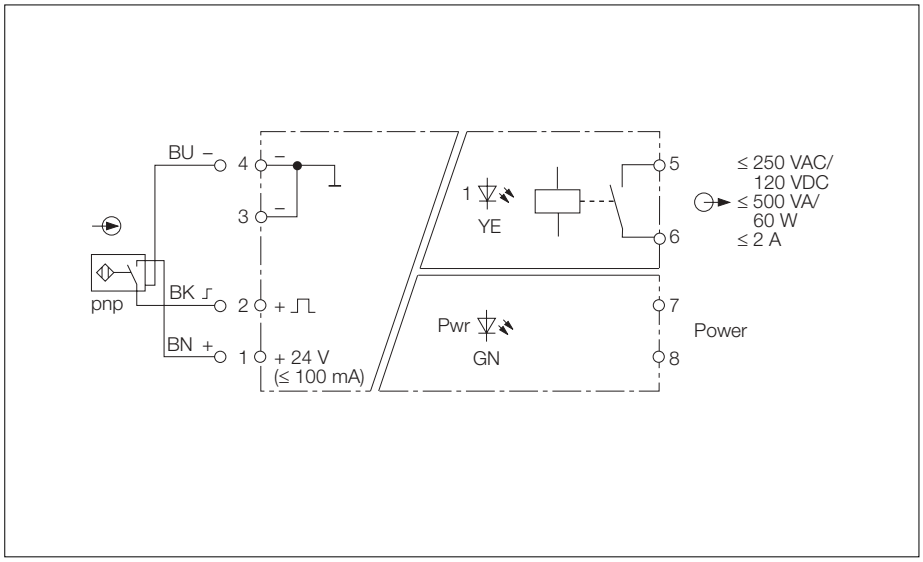

Amplifier Relay MK81-11-R

Type	MK81-11-R/48...250VUC
Ident-no.	7545013
Supply voltage U_B	48...250 VUC
Line frequency (AC)	40...62 Hz
Power consumption	≤ 3.5 VA
Galvanic isolation	between input circuit, output circuit and supply voltage for 250 V_{rms} test voltage 2.5 kV_{rms}
Input circuit	3-wire sensors (pnp)
Sensor supply	24 VDC ± 3 %
Max. sensor current consumption	≤ 100 mA
Output circuit	1 Relay output (NO)
Switching voltage	≤ 250 VAC/120 VDC
Switching current	≤ 2 A
Switching capacity	≤ 500 VA/60 W
Switching frequency	≤ 10 Hz
Contact material	Ag alloy + 3 µm Au
LED indications	
– Power	green
– Switching status	yellow
Housing	8-pole, 18 mm wide, Polycarbonate/ABS, flammability class V-0 per UL 94
Mounting	snap-on clamps for top-hat rail (DIN 50022) or screw terminals for panel mounting
Connection	via flat terminals with self-lifting pressure plates
Connection profile	≤ 2 x 2.5 mm^2 or 2 x 1.5 mm^2 with wire sleeves
Degree of protection (IEC 60529/EN 60529)	IP20
Operating temperature	-25…+70 °C

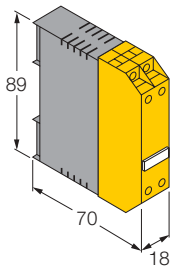

Hans Turck GmbH & Co.KG • D–45466 Mülheim/Ruhr • Tel. 0208/4952-0 • Fax 0208/4952-264 • E-Mail: turckmh@mail.turck-globe.de • www.turck.com

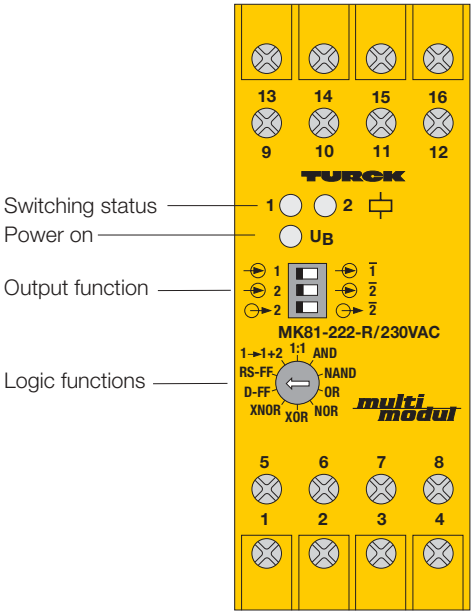

Amplifier Relay
MK81-222-R/24VDC
MK81-222-R/230VAC
2-channel

- **2-channel supply for 3-wire sensors (pnp and npn) and 2-wire sensors according to EN 60947-5-6 (NAMUR)**
- **Monostable transmission, multiplication, 8 selectable logic functions**
- **Separately adjustable output function of each channel**
- **2 relay outputs with 1 SPDT contact each**

The dual channel amplifier relays MK81-222-R/... are suited for connection of two proximity switches according to EN 60947-5-6 or 3-wire sensors (pnp or npn). The current consumption of each sensor may not exceed 20 mA (admissible total current 40 mA).

The device features two relay outputs with one hard gold plated SPDT contact per channel. A front panel rotary switch serves to adjust the following functions:

- transmission 1:1 (monostable)
- multiplication, two relay outputs are assigned to input 1
- AND logic
- NAND logic
- OR logic
- NOR logic
- XOR logic
- XNOR logic
- RS flipflop
- D flipflop

The output function mode can be adjusted via front panel switches. The input states may be inverted to adapt the logic functions to the sensors. In the mono-stable function mode, an inversion accords to a change of the output function. Additionally, it is possible to change the output function mode of relay 2 via the third switch.

The switching status of each relay is indicated via a yellow LED; a green LED indicates that the device is powered.

7

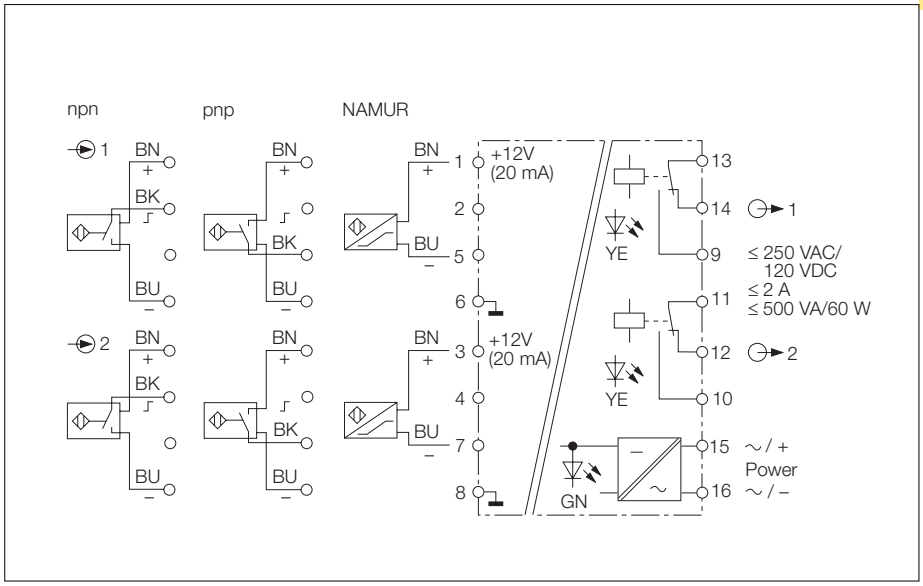

Amplifier Relay MK81-222-R

Type	MK81-222-R/230VAC	MK81-222-R/24VDC
Ident-no.	7545002	7545001
Supply voltage U_B	184...264 VAC	10...30 VDC
Line frequency	48...62 Hz	–
Power consumption	≤ 5 VA	≤ 5 W
Galvanic isolation	between input circuits, output circuits and supply voltage for 250 V_{rms}	between input circuits, output circuits and supply voltage for 250 V_{rms}
Input circuits	3-wire sensors, pnp 3-wire sensors, npn 2-wire sensors, NAMUR	3-wire sensors, pnp 3-wire sensors, npn 2-wire sensors, NAMUR
Sensor supply	12 V ± 5 %, stabilised	12 V ± 5 %, stabilised
– Ripple W_{PP}	≤ 1 %	≤ 1 %
– Maximum load	≤ 40 mA	≤ 40 mA
Output circuits	2 relay outputs	2 relay outputs
Number of contacts	each 1 SPDT contact, silver-alloy + 3 µm Au	each 1 SPDT contact, silver-alloy + 3 µm Au
Switching voltage	≤ 250 VAC	≤ 250 VAC
Switching current	≤ 2 A	≤ 2 A
Switching capacity	< 500 VA/60 W	< 500 VA/60 W
LED indications		
– Power	green	green
– Switching status	2 x yellow	2 x yellow
Housing	16-pole, 36 mm wide, Polycarbonate/ABS flammability class V-0 per UL 94	16-pole, 36 mm wide, Polycarbonate/ABS flammability class V-0 per UL 94
Mounting	snap-on clamps for top-hat rail (DIN 50022) or screw terminals for panel mounting	snap-on clamps for top-hat rail (DIN 50022) or screw terminals for panel mounting
Connection	via flat terminals with self-lifting pressure plates	via flat terminals with self-lifting pressure plates
Connection profile	≤ 2 x 2.5 mm² or 2 x 1.5 mm² with wire sleeves	≤ 2 x 2.5 mm² or 2 x 1.5 mm² with wire sleeves
Degree of protection (IEC 60529/EN 60529)	IP20	IP 20
Operating temperature	-25…+60 °C	-25…+60 °C

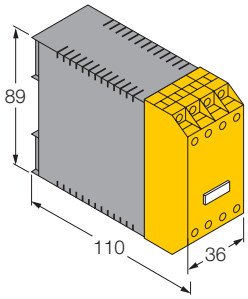

Hans Turck GmbH & Co.KG • D–45466 Mülheim/Ruhr • Tel. 0208/4952-0 • Fax 0208/4952-264 • E-Mail: turckmh@mail.turck-globe.de • www.turck.com

Amplifier Relay
MS81-221-R/230VAC
MS81-221-R/115VAC
2-channel

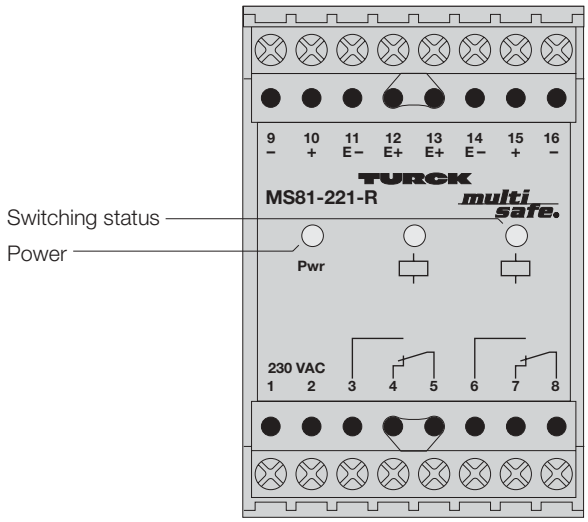

- **2-channel power supply for 3-wire proximity sensors (npn, pnp)**
- **Programmable NO or NC output function of each channel**
- **Stabilised and short-circuit protected sensor supply circuit**
- **2 relay outputs, each with 1 SPDT contact**
- **Sealed relays with hard gold plated contacts**

The dual channel MS81-221-R/... amplifier relays are dual channel devices with relay outputs.

The device is capable of powering two 3-wire pnp sensors (II) or two 3-wire npn sensors (III). Mechanical contacts may also be used as input devices (I) (for operation as a contact protection relay). The maximum output current of the device is 50 mA per channel. It is therefore suitable for use with:

– inductive sensors
– magnetic field sensors
– capacitive sensors
– photoelectric sensors
– ultrasonic sensors

Each channel has one SPDT relay output.

The operation of each channel may be changed from NO (without bridge) to NC (with bridge) by jumpering two terminals.

Status indications are provided by three LEDs located on the front panel. The green LED is energised when the device is powered, the two yellow LEDs indicate the status of the respective outputs.

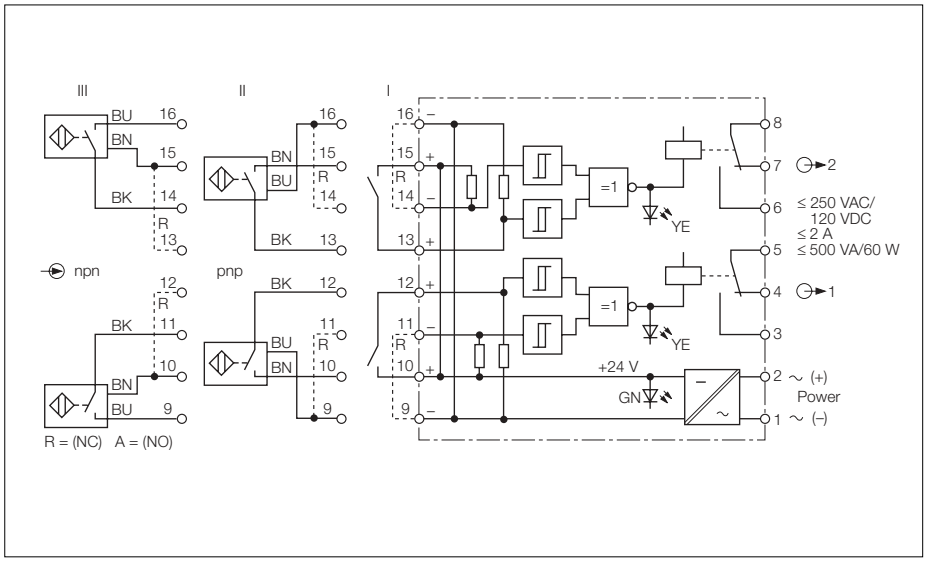

7

Amplifier Relay MS81-221-R

Type	MS81-221-R/230VAC	MS81-221-R/115VAC
Ident-no.	05121	05109
Supply voltage U_B	196...253 VAC	98...132 VAC
Line frequency	48…62 Hz	48…62 Hz
Power consumption	≤ 6 VA	≤ 6 VA
Galvanic isolation	between input circuits, output circuits and supply voltage for 250 V_{rms}	between input circuits, output circuits and supply voltage for 250 V_{rms}
Input circuits	for 3-wire sensors, pnp/npn	for 3-wire sensors, pnp/npn
Sensor supply		
– Sensor voltage	24 VDC, stabilised	24 VDC, stabilised
– Sensor current	≤ 2 x 50 mA	≤ 2 x 50 mA
Ripple W_{PP}	≤ 5 %	≤ 5 %
Maximum load	≤ 100 mA	≤ 100 mA
Output circuits	2 relay outputs	2 relay outputs
Number of contacts	1 SPDT contact, silver-alloy + 3 µm Au	1 SPDT contact, silver-alloy + 3 µm Au
Switching voltage	250 V	250 V
Switching current	≤ 2 A	≤ 2 A
Switching capacity	≤ 500 VA/60 W	≤ 500 VA/60 W
Switching frequency	≤ 10 Hz	≤ 10 Hz
Switch-on time	≤ 15 ms	≤ 15 ms
Switch-off time	≤ 15 ms	≤ 15 ms
LED indications		
– Power	green	green
– Switching status	yellow	yellow
Housing	50 mm wide, Polycarbonate/ABS	
Mounting	panel mounting or snap-on clamps for top-hat rail (DIN 50022)	
Connection	2 x 8 self-lifting pressure plates	
Connecton profile	≤ 2 x 2.5 mm^2 or 2 x 1.5 mm^2 with wire sleeves	
Degree of protection (IEC 60529/EN 60529)	IP20	
Operating temperature	-25…60 °C	

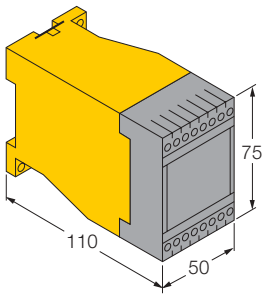

Hans Turck GmbH & Co.KG • D–45466 Mülheim/Ruhr • Tel. 0208/4952-0 • Fax 0208/4952-264 • E-Mail: turckmh@mail.turck-globe.de • www.turck.com

Amplifier Relay
MS81-222-R/230VAC
MS81-222-R/115VAC
2-channel

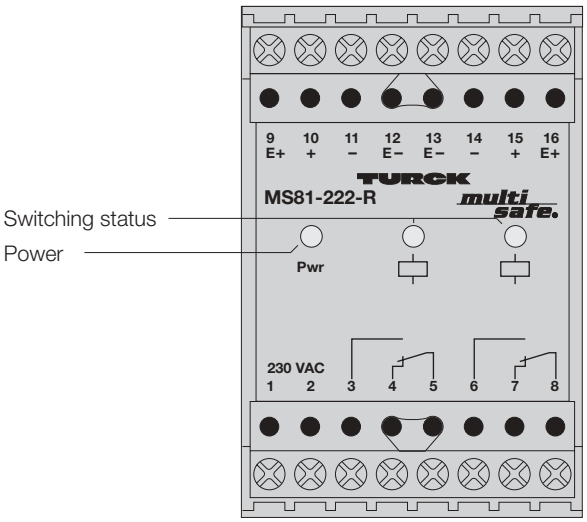

- **2-channel power supply for 3-wire proximity sensors (npn or pnp) or 2-wire sensors per EN 60947-5-6 (NAMUR)**
- **Monostable or bistable function (programmable)**
- **Programmable NO or NC output function of each channel**
- **2 relay outputs, each with 1 SPDT contact**
- **Sealed relays with hard gold plated contacts**

The dual channel MS81-222-R/... amplifier relays are dual channel devices with relay outputs suitable for connection of two proximity switches. The input circuits are capable of powering two 3-wire proximity sensors (npn or pnp) or 2-wire NAMUR sensors. The maximum sensor current is 20 mA (maximum output current of device 40 mA).

Each channel has one SPDT relay output with hard gold plated contacts.

The operation mode of each channel may be programmed from NO to NC by jumpering two terminals. Status indications of the outputs are provided by two yellow LEDs. A green LED illuminates when the device is powered.

Programming (with wire jumpers)

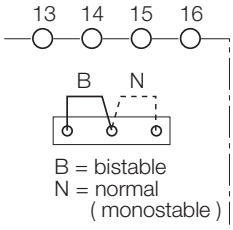

The plug-in jumper is located inside the device, under the black cover. The cover can be lifted off after removing the terminal blocks.

The device can be set to bistable operation by setting the jumper block under the front cover of the device. In the bistable mode one input serves as a set input and the other as a reset input. The outputs are triggered alternatively (complementary output function).

When power is applied, the device resets to the standard (preferred state) mode: channel 1, relay de-energised (LED 1, off) channel 2, relay energised (LED 2, on).

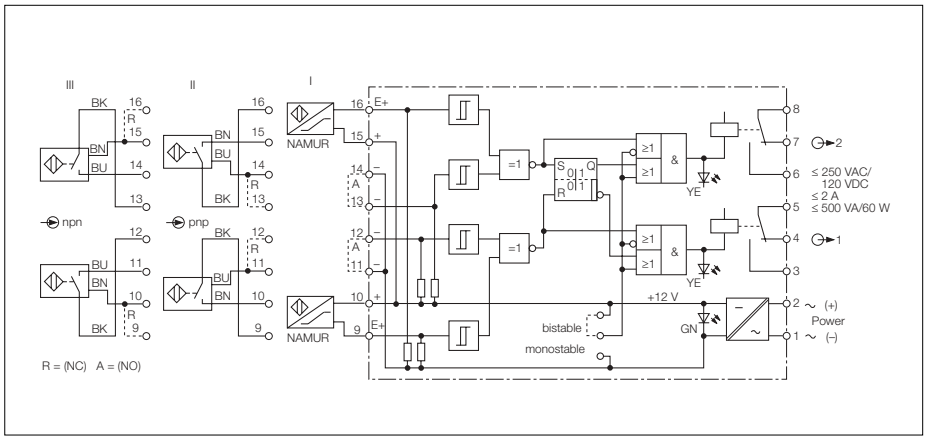

7

Amplifier Relay MS81-222-R

Type	MS81-222-R/230VAC	MS81-222-R/115VAC
Ident-no.	0511100	0511102
Supply voltage U_B	184...264 VAC	92...132 VAC
Line frequency	48...62 Hz	48...62 Hz
Power consumption	≤ 4.5 VA	≤ 5 VA
Galvanic isolation	between input circuits, output circuits and supply voltage for 250 V_{rms}	between input circuits, output circuits and supply voltage for 250 V_{rms}
Input circuits	3-wire sensors, pnp 3-wire sensors, npn 2-wire sensors, NAMUR	3-wire sensors, pnp 3-wire sensors, npn 2-wire sensors, NAMUR
Sensor Supply	12 V ± 5 %, stabilised	12 V ± 5 %, stabilised
– Ripple W_{PP}	≤ 1 %	≤ 1 %
– Maximum load	≤ 40 mA	≤ 40 mA
Output circuits	2 relay outputs	2 relay outputs
Number of contacts	each 1 SPDT contact, silver-alloy + 3 µm Au	each 1 SPDT contact, silver-alloy + 3 µm Au
Switching voltage	≤ 250 V	≤ 250 V
Switching current	≤ 2 A	≤ 2 A
Switching capacity	< 500 VA/60 W	< 500 VA/60 W
LED indications		
– Power	green	green
– Switching status	2 x yellow	2 x yellow
Housing	50 mm wide, Polycarbonate/ABS	
Mounting	panel mounting or snap-on clamps for top-hat rail (DIN 50022)	
Connection	2 x 8 self-lifting pressure plates	
Connecton profile	≤ 2 x 2.5 mm^2 or 2 x 1.5 mm^2 with wire sleeves	
Degree of protection (IEC 60529/EN 60529)	IP20	
Operating temperature	-25...+60 °C	

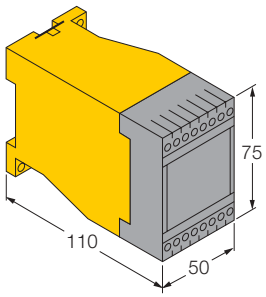

 Hans Turck GmbH & Co.KG • D–45466 Mülheim/Ruhr • Tel. 0208/4952-0 • Fax 0208/4952-264 • E-Mail: turckmh@mail.turck-globe.de • www.turck.com

Amplifier Relay
MS81-222-T/230VAC
MS81-222-T/115VAC
2-channel

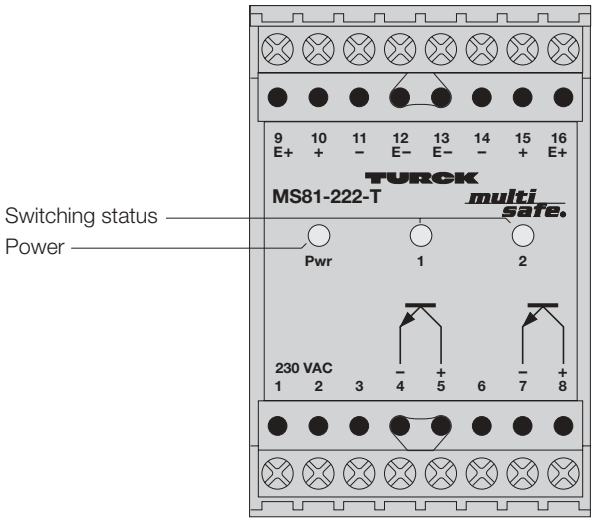

- **2-channel power supply for 3-wire proximity sensors (pnp, npn) or 2-wire sensors per EN 60947-5-6 (NAMUR)**
- **Monostable or bistable function (selectable)**
- **Programmable NO or NC output function of each channel**
- **2 short-circuit protected, potential-free transistor outputs for switching of inductive loads**

Each channel has one optically coupled isolated transistor output. The outputs are reverse-polarity protected by means of a diode connected in parallel. They are equipped with a thermic short-circuit protection (a short-circuit during a polarity reversal will destroy the device).

They may be used for all types of DC loads such as contactors, lamps and valves. A protective circuitry against inductive switching peaks is integrated in the device. The outputs can be connected in parallel or in series.

The operating mode of each channel may be changed from NO to NC by jumpering two terminals. Status indications of the respective outputs are provided by two yellow LEDs. The green LED illuminates when the device is powered.

Programming via Jumper Block

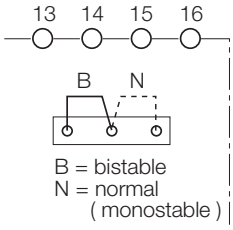

The plug-in jumper is located inside the device, under the black cover. The cover can be lifted off after removing the terminal blocks.

The device can be changed to bistable operation by setting the jumper block under the front cover of the device. In the bistable mode, one input serves as a set input and the other as a reset input. The outputs are triggered alternatively (complementary output function).

When power is applied, the device resets to standard (preferred state) mode: channel 1, relay de-energised (LED 1, off) channel 2, relay energised (LED 2, on).

The dual channel MS81-222-T/... amplifier relays provide a power source for two proximity sensors. Available input selections include two 3-wire proximity sensors with NO or NC outputs, or NAMUR sensors. The maximum power consumption of each device is 40 mA. It is therefore suitable for sensors with a power consumption of 20 mA each.

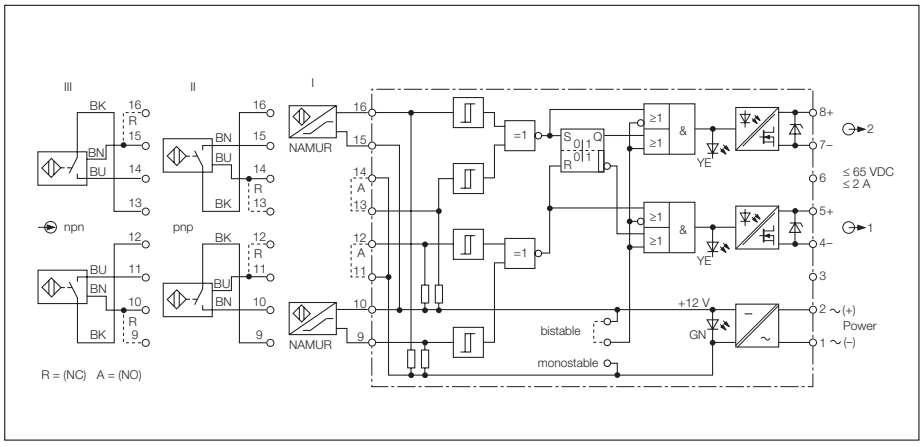

7

Amplifier Relay MS81-222-T

Type	MS81-222-T/230VAC	MS81-222-T/115VAC
Ident-no.	0511000	0511020
Supply voltage U_B	184...264 VAC	92...132 VAC
Line frequency	48...62 Hz	48...62 Hz
Power consumption	≤ 4.5 VA	≤ 5 VA
Galvanic isolation	between input circuits, output circuits and supply voltage for 250 V_{rms}	between input circuits, output circuits and supply voltage for 250 V_{rms}
Input Circuits	3-wire sensors, pnp 3-wire sensors, npn 2-wire sensors, NAMUR	3-wire sensors, pnp 3-wire sensors, npn 2-wire sensors, NAMUR
Sensor supply	12 V ± 5 %, stabilised	12 V ± 5 %, stabilised
– Ripple W_{PP}	≤ 1 %	≤ 1 %
– Maximum load	≤ 40 mA	≤ 40 mA
Output Circuits	2 potential-free transistor outputs	2 potential-free transistor outputs
Switching voltage	≤ 65 VDC	≤ 65 VDC
Switching current	≤ 2 A	≤ 2 A
Voltage drop	≤ 0.3 V	≤ 0.3 V
LED Indications		
– Power	green	green
– Switching status	2 x yellow	2 x yellow
Housing	50 mm wide, Polycarbonate/ABS	
Mounting	panel mounting or snap-on clamps for top-hat rail (DIN 50022)	
Connection	2 x 8 self-lifting pressure plates	
Connection profile	≤ 2 x 2.5 mm² or 2 x 1.5 mm² with wire sleeves	
Degree of protection (IEC 60529/EN 60529)	IP20	
Operating temperature	-25…+60 °C	

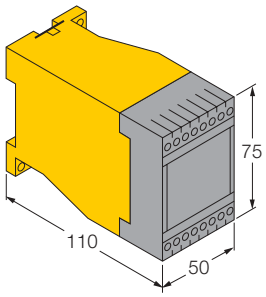

Power Supply
IM82-2414/94-265VAC

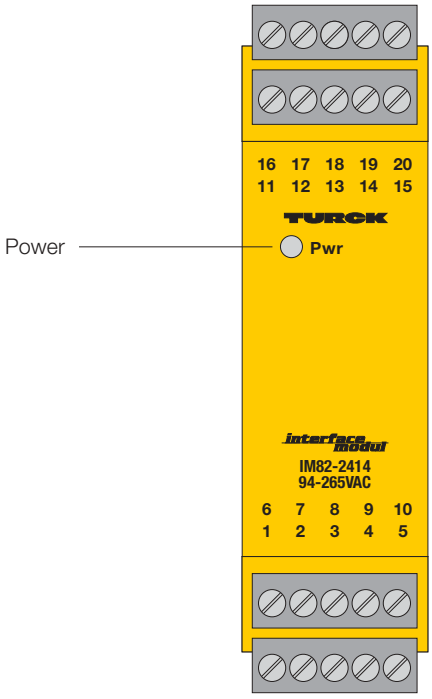

- **Output voltage 24 VDC**
- **Output current 1.4 A**
- **Safety extra-low voltage (SELV) according to EN 60950**
- **Large voltage range 94...265 VAC**
- **"Power good" relay**
- **Removable terminal blocks**

The power supplies, type IM82-2414, are designed to power direct current devices, especially switching and monitoring devices of the TURCK series *interface modul*, *multimodul* and *multisafe*®, as well as light barriers and sensors.

The power supply provides an output voltage of 24 VDC and an output current of 1.4 A. The cyclic overload protection is activated if the current is higher than 1.6 A. The device provides safety extra-low voltage (SELV) according to EN 60950, protection class II. The device is approved by UL and CSA.

If the front panel LED illuminates green, the connected consumers are provided with power. The "power good" relay is energised if the output voltage is higher than 21 V. If the voltage drops below this value, the relay is de-energised and the LED illuminates red.

The A.C. voltage inputs may only be used alternatively and not for prime power distribution. During operation the removable terminal blocks must be plugged in. When installing the device, please ensure that heat can dissipate easily.

7

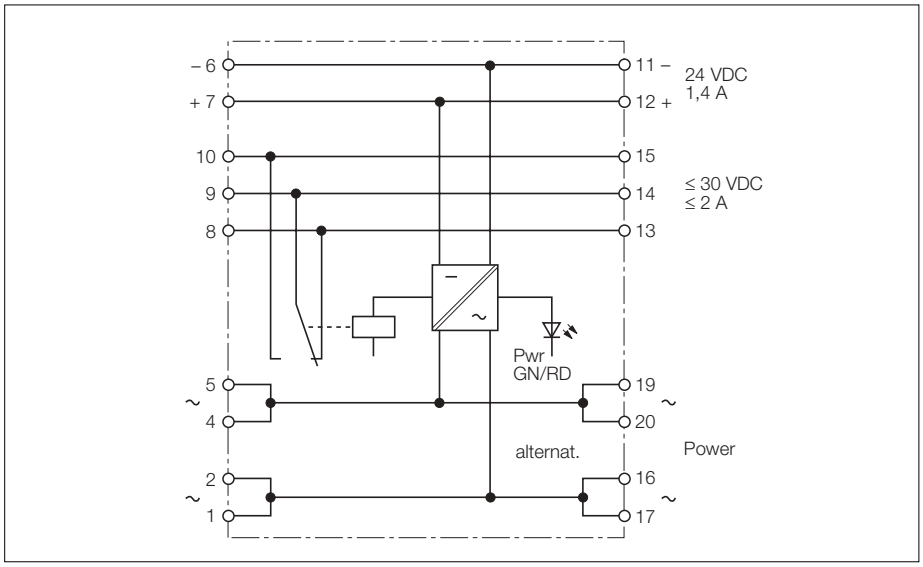

Power Supply IM82-2414/94-265VAC

Type	IM82-2414/94-265VAC
Ident-no.	7545023
Supply voltage	94…265 VAC
Line frequency	47…63 Hz
Power consumption	< 40 W
Starting current inrush	< 15 times the nominal peak current value after ≥ 5 ms, $I^2t < 2{,}8\ A^2s$
Galvanic isolation	clearances and creepages: 8 mm, test voltage of serial device: 3 kV test voltage of prototype: 4 kV
Output voltage	24 VDC ± 3 %
Ripple	≤ 1 %
Nominal load	1.4 A
Overload protection	> 1.6 A (cyclic)
Power derating	2.5 %/K from 60 °C on
Output circuit	
Switching voltage	≤ 30 VDC
Switching current	≤ 2 A
Switching capacity	< 60 W
LED indications	
Power	green/red (dual colour LED)
Housing	20-poles, 27 mm wide, Polycarbonate/ABS flammability class V-0 according to UL 94
Mounting	snap-on mounting on hat rail (DIN 50022) or screw mounting on base plate
Connection	removable terminal blocks, reverse-polarity protected, screw connections, self-lifting
Connection profile	≤ 1 x 2.5 mm^2, 2 x 1.5 mm^2 or 2 x 1,0 mm^2 with wire sleeves
Protection degree (IEC 60529/EN 60529)	IP20
Operating temperature range	-25...+70 °C

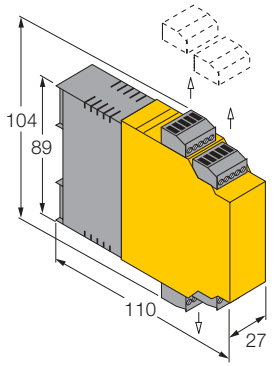

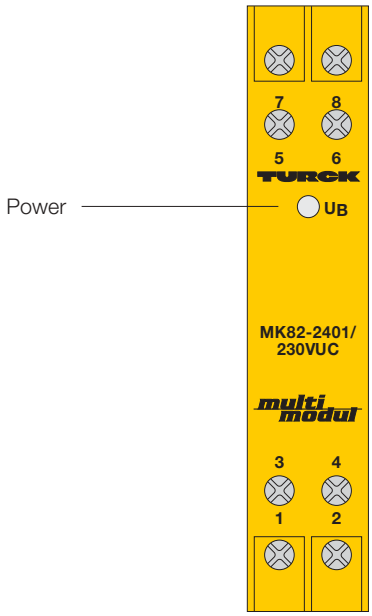

Power Supply
MK82-2401/230VUC

- **Short-circuit and overload protected**
- **Output voltage: 24 VDC**
  Output current: 100 mA
- **Ideal for supply of sensors and photoelectric barriers**

The power supplies MK82-2401 are designed for supply of DC loads, especially for photoelectric barriers, sensors and *multimodul* style switching and monitoring devices.

The device features a universal power supply with a wide voltage range for connection of either AC or DC voltages. The devices features an output configuration of 24 VDC/100 mA. The output is short-circuit and overload protected.
If the overload limit of 130 mA is exceeded, the electronic fuse latches and the output current drops to approx. 20 mA. Latching can be reset by disconnecting the power supply.

An illuminated green LED on the front cover indicates that the power supply of the connected loads is ensured.

7

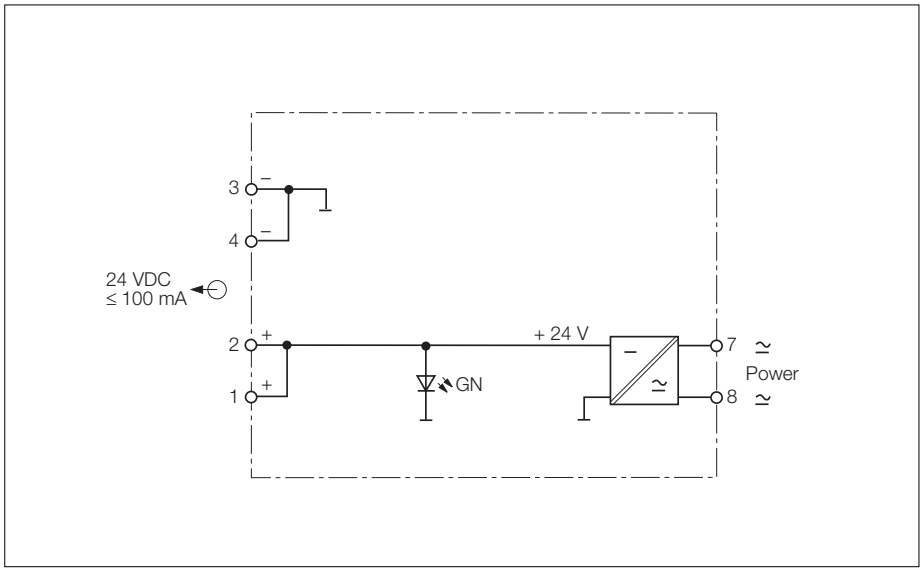

Power Supply MK82-2401

Type	MK82-2401/230VUC
Ident-no.	7545022
Supply voltage U_B	48...250 VAC/48...375 VDC
Line frequency	0...62 Hz
Power consumption	≤ 3.5 VA
Galvanic isolation	
Clearances and creepage distances	according to DIN/VDE 0110
Test voltage	4 kV_{rms}
Output voltage	24 VDC ± 3 %
Ripple W_{PP}	≤ 3 %
Maximum load capacity	≤ 100 mA
Influence factor of suppy voltage level	≤ 1 %
LED indications	
– Power	green
Housing	8-pole, 18 mm wide, Polycarbonate/ABS, flammability class V-0 per UL 94
Mounting	snap-on clamps for top-hat rail (DIN 50022) or screw terminals for panel mounting
Connection	via flat terminals with self-lifting pressure plates
Connection profile	≤ 2 x 2.5 mm^2 or 2 x 1.5 mm^2 with wire sleeves
Degree of protection (IEC 60529/EN 60529)	IP20
Operating temperature	-25…+60 °C

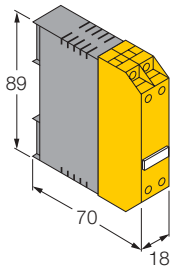

 Hans Turck GmbH & Co.KG • D–45466 Mülheim/Ruhr • Tel. 0208/4952-0 • Fax 0208/4952-264 • E-Mail: turckmh@mail.turck-globe.de • www.turck.com

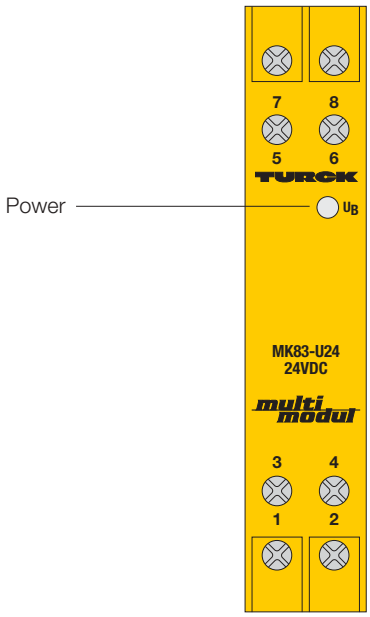

Voltage Monitor MK83-U24 1-channel

- **1-channel voltage monitor**
- **Monitoring of 24 VDC power supplies**
- **1 NO and 1 NC output contact**
- **Green LED for switching status indications**

The voltage monitor MK83-U24 is designed to monitor 24 VDC supply voltages for overvoltage, undervoltage and ripple.

Typical applications are:

– fuse failures in three-phase systems
– voltage monitoring of battery charging systems
– fault indication for power supplies
– overload control

This voltage monitor features two relay outputs (1 NO and 1 NC contact).

The switching status is indicated by a green LED: it illuminates, if the voltage levels are correct; it turns off, if there is an error condition.

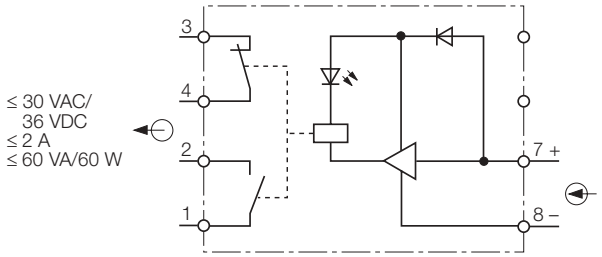

7

Voltage Monitor MK83-U24

Type	MK83-U24
Ident-no.	75 220
Operating voltage U_B	16.8...31.2 VDC
Ripple W_{PP}	≤ 20 %
Current consumption	≤ 30 mA
Output circuits	2 relay outputs (1 NC contact, 1 NO contact)
Switching voltage	30 VAC/36 VDC
Switching current	2 A
Switching capacity	60 VA/60 W
Switching points	
Undervoltage	
– Switch-off threshold	19.68 V
– Switch-on threshold	20.40 V
Overvoltage	
– Switch-off threshold	28.32 V
– Switch-on threshold	27.60 V
Ripple W_{PP}	≥ 15 %
Thermal drift of switching thresholds	≤ 0.03 %/K
LED indications	
– Power	green
Housing	8-pole, 18 mm wide, Polycarbonate/ABS, flammability class V-0 per UL 94
Mounting	snap-on clamps for top-hat rail (DIN 50022) or screw terminals for panel mounting
Connection	via flat terminals with self-lifting pressure plates
Connection profile	≤ 2 x 2.5 mm² or 2 x 1.5 mm² with wire sleeves
Degree of protection (IEC 60529/EN 60529)	IP20
Operating temperature	-25…+60 °C

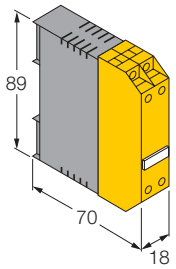

 Hans Turck GmbH & Co.KG • D–45466 Mülheim/Ruhr • Tel. 0208/4952-0 • Fax 0208/4952-264 • E-Mail: turckmh@mail.turck-globe.de • www.turck.com

LEVEL CONTROLS

LEVEL CONTROLS

 Hans Turck GmbH & Co.KG • D–45466 Mülheim/Ruhr • Tel. 0208/4952-0 • Fax 0208/4952-264 • E-Mail: turckmh@mail.turck-globe.de • www.turck.com

Level Controls Selection Guide

Housing Style *multimodul multisafe®*

Type / Housing	MK91-R11 (multi modul)	MK91-12-R (multi modul)	MK91-121-R (multi modul)				MS91-12-R (multi safe®)				
Function											
Level control	●	●	●				●				
Probe											
Number of channels	1	1	1				1				
Galvanic isolation											
Input circuit to output circuit	●	●	●				●				
Input circuit to power supply		●					●				
Output circuit to power supply	●	●	●				●				
Input circuits											
Adjustable sensitivity range		●	●				●				
0.1...1 kΩ		●	●				●				
0.5...5 kΩ		●	●				●				
2...20 kΩ		●	●				●				
10...100 kΩ		●	●				●				
40 kΩ	●										
Hysteresis [%]	5	10	10				10				
Switch-on and Switch-off delay											
0.1...15 s							●				
0.1...20 s		●	●								
Switch-on delay											
15 s	●										
ON/OFF control and probe selection							●				
Output circuits											
Relay output, SPDT contact per channel	1	2	2				2				
Switching voltage 250 V	●	●					●				
Switching current [A]	3	3	3				4				
Transistor output per channel											
Supply voltage											
24 VDC	●	●	●								
230 VAC		●	●								
20...250 VUC							●				
Data sheet – see page	5	7	9				11				

8

Level Controls

Level controls are used to monitor and regulate the level of conductive liquids. They are typically used in bottling applications where a distinction between foam and liquid must be made. The output of these controllers operate pump motor starters and solenoid valves.

Monitoring and control of filling levels

Conductivity type level controllers are suitable for all water-based liquids. They measure the resistance between two probes in the liquid. AC voltages are used in the probe circuit to eliminate build-up of deposits as well as corrosion.

Unlike most level controls available on the market, the circuit voltage of the probes in TURCK devices is generated internally and has no direct connection to the power line. Thus, line voltage fluctuations will not affect the switching points. TURCK level controls are also available for 24 VDC power supplies.

The conductivity of liquids depends mainly on their physical properties. In addition, the resistance of the liquid between the probes is directly affected by the distance and size of the probe itself. TURCK level controls can be adjusted to wide ranges.

The devices also feature an adjustable switch-on and switch-off delay function for applications where turbulence in liquid levels exist.

As a level monitor, these units can be used to monitor and protect against overflow or run-dry conditions. As a dual level regulator, they can also be used to control pumps and solenoid valves. For proper dual level sensing a Reed relay is integrated in the device to alternate the probe voltage between upper and lower probe (MIN and MAX probe).

Dual level regulation with level controls

Fig. 1 shows the basic configuration of a dual level sensing regulator type MS 91.

Function A (Normally Open mode)

Free inlet/pump-out mode with energised relay:
If the liquid falls below the low level setpoint, the output relay and the "MIN" probe de-energise until liquid is added and the liquid reaches the "MAX" probe.

Function R (Normally Closed mode)

Free outlet/pump-in mode with de-energised relay:
When the liquid falls below the low level setpoint, the output relay and the "MIN" probe are energised until liquid is added and the liquid level reaches the "Max" probe.

The MK91 coupler can be used for applications with only one switch point. The switch point of this device is calibrated at 40 kΩ (other settings are available on request).

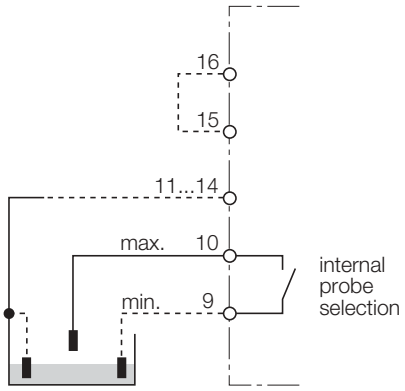

Fig. 1 Dual level sensing regulator - example

Product range

Level controls are available in module housing and on Eurocard:

multisafe® level controls MS91
- 1 channel
- relay outputs (2 SPDT contacts)
- modular housing, 50 x 75 mm

multimodul level controls MK91
- 1 channel
- 1 relay output (1 SPDT contact)
- modular housing, 18 x 89 mm

Any commercial probes and accessories may be used with these devices.
(See TURCK EL1/1 probes in chapter 9, accessories, page 9 – 7).

An applications brochure is available on request.

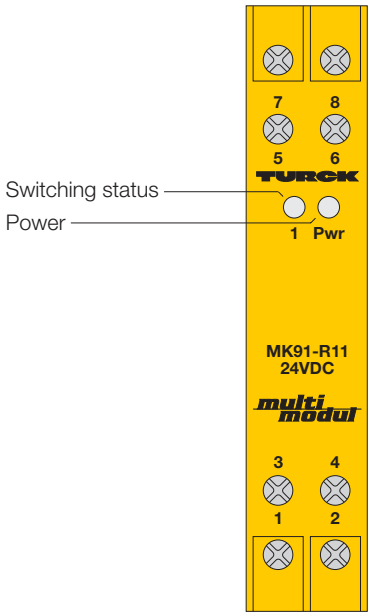

Level Control MK91-R11/24VDC 1-channel

- **1-channel level control**
- **Galvanic isolation between input circuit, output circuit and supply voltage**
- **Relay output (1 SPDT contact)**
- **Switch point at 40 kΩ**
- **Hysteresis approx. 5 %**

The MK91-R11 is a single channel level control for regulating conductive liquid levels. Electrodes connected to the device analyse the resistance of the liquid against the body of the container.

A rectangular AC voltage signal is applied to the electrode. This enables DC-free and therefore electrolytic-free measurement of the liquid resistance.

The switching point is firmly defined at R_m = 40 kΩ (other values on request). When the switch point is reached, the output relay will close. A yellow LED indicates the switching status; a green LED indicates that the device is powered.

The device provides protection against reverse polarity and transient overvoltage.

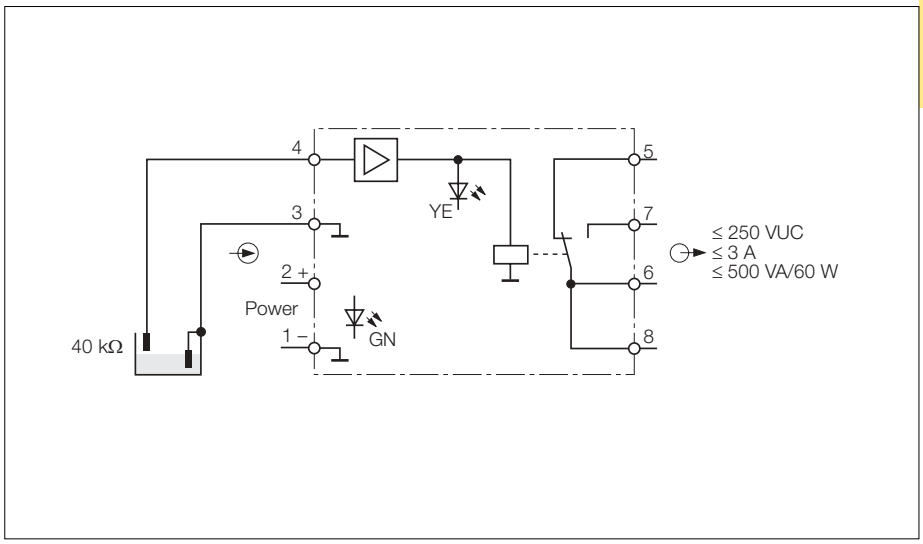

8

Level Control MK91-R11

Type	MK91-R11/24VDC
Ident-no.	7525202
Supply voltage U_B	19...29 VDC
Current consumption	≤ 20 mA at 24 VDC
Galvanic isolation	between input circuit, output circuit and supply voltage for 250 V_{rms}, test voltage 4 kV/8 mm input circuit and supply voltage galvanically connected
Clearences and creepage distances	
– Input circuit and output circuit	≥ 4 kV/8 mm
Input circuits	
Switch point	40 kΩ ± 10 % (other values on request)
Hysteresis	approx. 5 %
Switch point deviation in supply voltage range	≤ 1%
Operation characteristics	U_B = 24 V, R_m = 40 kΩ
– Rectangular signal	f = 3 Hz
– Amplitude of electrode voltage	± 2 V
– Amplitude of electrode current	± 50 µA
Output circuits	1 relay output
Number of contacts	1 SPDT contact, silver-alloy + 3 µm Au
Switching voltage	≤ 250 VUC
Switching current	≤ 3 A
Switching capacity	≤ 500 VA/60 W
Switching frequency	≤ 5 Hz
LED indications	
– Power	green
– Switching status	yellow
Housing	8-pole, 18 mm wide, Polycarbonate/ABS, flammability class V-0 per UL 94
Mounting	snap-on clamps for top-hat rail (DIN 50022) or screw terminals for panel mounting
Connection	via flat terminals with self-lifting pressure plates
Connection profile	≤ 2 x 2.5 mm² or 2 x 1.5 mm² with wire sleeves
Degree of protection (IEC 60529/EN 60529)	IP20
Operating temperature	-25...60 °C

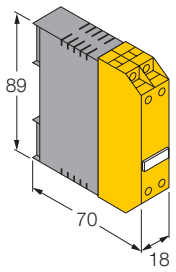

Hans Turck GmbH & Co.KG • D–45466 Mülheim/Ruhr • Tel. 0208/4952-0 • Fax 0208/4952-264 • E-Mail: turckmh@mail.turck-globe.de • www.turck.com

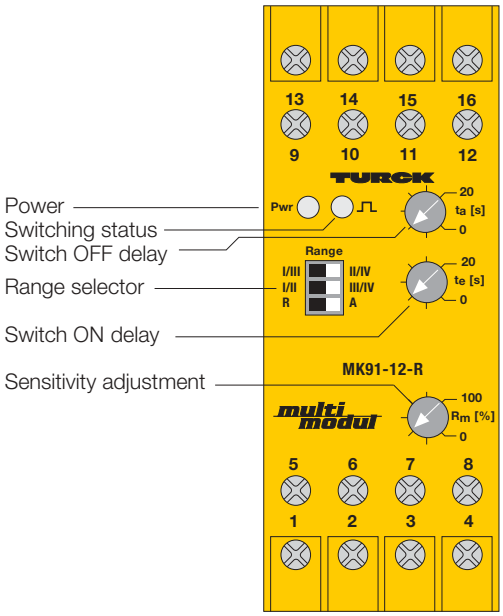

Level Control
MK91-12-R/24VDC
MK91-12-R/230VAC
1-channel

- **1-channel level control**
- **Galvanic isolation between input circuit, output circuit and supply voltage**
- **Adjustable sensitivity range from 0.2...100 kΩ**
- **Distinction between liquid and foam**
- **Separately adjustable switch-on and switch-off delay from 0...20 s**
- **2 relay outputs, each with 1 SPDT contact**
- **Electronic probe selection**

The single channel MK91-12-R level control is used to monitor and regulate the levels of conductive liquids. As a dual level regulator, it can be used to control pumps and solenoid valves. As a monitoring device it is designed for run-dry or overflow protection.

The level controller provides optimum reliability in differentiating a wide variety of liquids. The device is also suited for applications requiring distinction between foam and liquid.

The sensitivity (resistance of liquid) is adjustable from 0.2...100 kΩ. One of four sensitivity options can be selected by means of the "Range" selector switch. Fine sensitivity adjustment within the selected range is accomplished with a potentiometer on the front cover.

The adjustable switch-on and switch-off delay is especially important for turbulent liquid levels. A delay time from 0...20 s can be adjusted via two front cover potentiometers.

The device features two relay outputs with one SPDT contact each. They operate in parallel and provide the switching function. The output configuration of both outputs can be programmed from NO to NC for all measuring ranges using the "Range" switch.

A green LED indicates that power is applied to the device. A yellow LED indicates the switching status.

For further information, please order our installation guidelines.

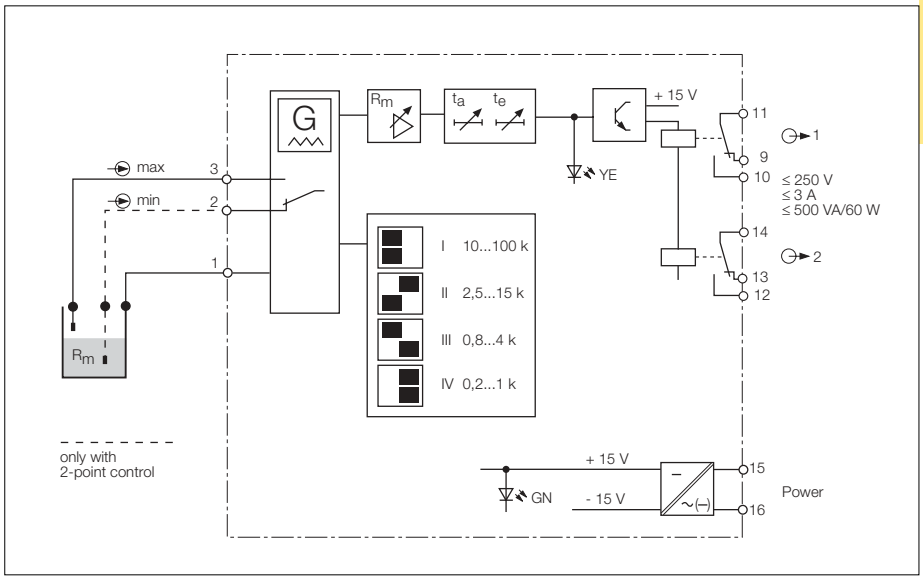

8

Level Control MK91-12-R

Type	MK91-12-R/230VAC	MK91-12-R/24VDC
Ident-no.	7545070	7545077
Supply voltage U_B	184...264 VAC	20...28 VDC
Line frequency/ripple W_{PP}	48…62 Hz	≤ 10 %
Power/current consumption	3 VA/ < 15 mA $_{rms}$	1.5 W
Galvanic isolation	between input circuit, output circuit and supply voltage for 250 V_{rms}, test voltage 2.5 kV_{rms}	between input circuit, output circuit and supply voltage for 250 V_{rms}, test voltage 2.5 kV_{rms}
Input circuits		
Probe voltage	0.02...5 V_{PP}/150 Hz (triangle)	0.02...5 V_{PP}/150 Hz (triangle)
Sensitivity range (switching threshold)	0.2…100 kΩ (adjustable in 4 ranges)	0.2…100 kΩ (adjustable in 4 ranges)
– Range 1	0.2…1 kΩ	0.2…1 kΩ
– Range 2	0.8…4 kΩ	0.8…4 kΩ
– Range 3	2.5…15 kΩ	2.5…15 kΩ
– Range 4	10…100 kΩ	10…100 kΩ
Hysteresis	approx. 10 %	approx. 10 %
Switch-on delay	0…20 s (adjustable)	0…20 s (adjustable)
Switch-off delay	0…20 s (adjustable)	0…20 s (adjustable)
Output circuits	2 relay outputs	2 relay outputs
Number of contacts	1 SPDT contact, silver-alloy + 3 µm Au	1 SPDT contact, silver-alloy + 3 µm Au
Switching voltage	250 V	250 V
Switching current	≤ 3 A	≤ 3 A
Switching capacity	≤ 500 VA/60 W	≤ 500 VA/60 W
LED indications		
– Power	green	green
– Switching status	yellow	yellow
Housing	16-pole, 36 mm wide, Polycarbonate/ABS flammability class V-0 per UL 94	16-pole, 36 mm wide, Polycarbonate/ABS flammability class V-0 per UL 94
Mounting	snap-on clamps for top-hat rail (DIN 50022) or screw terminals for panel mounting	snap-on clamps for top-hat rail (DIN 50022) or screw terminals for panel mounting
Connection	2 x 16 flat terminals with self-lifting pressure plates	2 x 16 flat terminals with self-lifting pressure plates
Connection profile	≤ 2 x 2.5 mm^2 or 2 x 1.5 mm^2 with wire sleeves	≤ 2 x 2.5 mm^2 or 2 x 1.5 mm^2 with wire sleeves
Degree of protection (IEC 60529/EN 60529)	IP20	IP20
Operating temperature	-25…+60 °C	-25…+60 °C

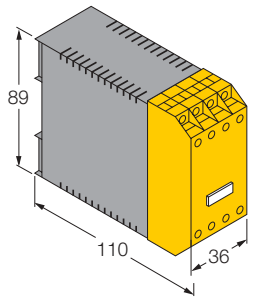

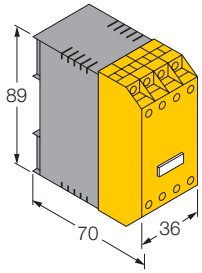

 Hans Turck GmbH & Co.KG • D–45466 Mülheim/Ruhr • Tel. 0208/4952-0 • Fax 0208/4952-264 • E-Mail: turckmh@mail.turck-globe.de • www.turck.com

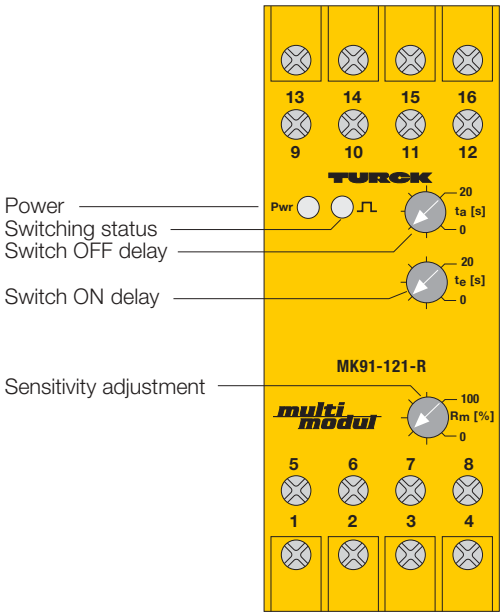

Level Control
MK91-121-R/24VDC
MK91-121-R/230VAC
1-channel

- **1-channel level control**
- **Galvanic isolation between input circuit, output circuit and supply voltage**
- **Adjustable sensitivity range from 0.2...100 kΩ**
- **Secure distinction between liquid and foam**
- **Separately adjustable switch-on and switch-off delay from 0...20 s**
- **2 relay outputs, each with 1 SPDT contact**
- **Electronic probe selection**
- **Versions for voltages of 24 VDC/ 115 VAC/230 VAC available**

The single channel MK91-121-R level control is used to monitor and regulate the levels of conductive liquids. As a dual level regulator, it can be used to control pumps and solenoid valves. As a monitoring device it is designed for run-dry or overflow protection.

The level controller provides optimum reliability in differentiating a wide variety of liquids. The device is also suited for applications requiring distinction between foam and liquid.

The sensitivity (resistance of liquid) is adjustable from 0.2...100 kΩ. One of four sensitivity options can be selected by linking the input terminals. Fine adjustment within the selected range is accomplished with a potentiometer on the front cover.

The adjustable switch-on and switch-off delay is especially important for turbulent liquid levels. A delay time from 0...20 s can be adjusted via two front cover potentiometers.

The device features two relay outputs with one SPDT contact each. They operate in parallel and provide the switching function. The output configuration of both outputs can be set from NO (with jumper between terminals 4/8) to NC (without jumper) for all measuring ranges.

A green LED indicates that power is applied to the device. A yellow LED indicates the switching status.

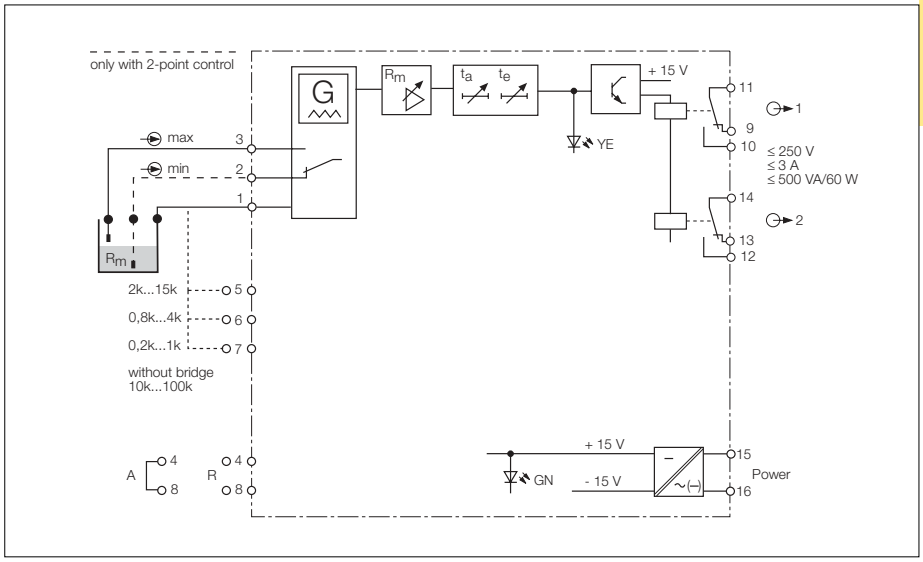

8

Level Control MK91-121-R

Type	MK91-121-R/230VAC	MK91-121-R/24VDC
Ident-no.	7545080	7545087
Supply voltage U_B	184...264 VAC	20...28 VDC
Line frequency/ripple W_{PP}	48…62 Hz	≤ 10 %
Power/current consumption	3 VA/ < 15 mA_{rms}	1.5 W
Galvanic isolation	between input circuit, output circuit and supply voltage for 250 V_{rms}	between input circuit, output circuit and supply voltage for 250 V_{rms}
Input circuits		
Probe voltage	0.02...5 V_{PP}/150 Hz (triangle)	0.02...5 V_{PP}/150 Hz (triangle)
Sensitivity range (switching threshold)	0.2…100 kΩ (adjustable in 4 ranges)	0.2…100 kΩ (adjustable in 4 ranges)
– Range 1	0.2…1 kΩ	0.2…1 kΩ
– Range 2	0.8…4 kΩ	0.8…4 kΩ
– Range 3	2.5…15 kΩ	2.5…15 kΩ
– Range 4	10…100 kΩ	10…100 kΩ
Hysteresis	10 %	10 %
Switch-on delay	0…20 s (adjustable)	0…20 s (adjustable)
Switch-off delay	0…20 s (adjustable)	0…20 s (adjustable)
Output circuits	2 relay outputs	2 relay outputs
Number of contacts	1 SPDT contact, silver-alloy + 3 µm Au	1 SPDT contact, silver-alloy + 3 µm Au
Switching voltage	250 V	250 V
Switching current	≤ 3 A	≤ 3 A
Switching capacity	≤ 500 VA/60 W	≤ 500 VA/60 W
LED indications		
– Power	green	green
– Switching status	yellow	yellow
Housing	16-pole, 36 mm wide, Polycarbonate/ABS flammability class V-0 per UL 94	16-pole, 36 mm wide, Polycarbonate/ABS flammability class V-0 per UL 94
Mounting	snap-on clamps for top-hat rail (DIN 50022) or screw terminals for panel mounting	snap-on clamps for top-hat rail (DIN 50022) or screw terminals for panel mounting
Connection	2 x 16 terminals with self-lifting pressure plates	2 x 16 terminals with self-lifting pressure plates
Connection profile	≤ 2 x 2.5 mm^2 or 2 x 1.5 mm^2 with wire sleeves	≤ 2 x 2.5 mm^2 or 2 x 1.5 mm^2 with wire sleeves
Degree of protection (IEC 60529/EN 60529)	IP20	IP20
Operating temperature	-25…+60 °C	-25…+60 °C

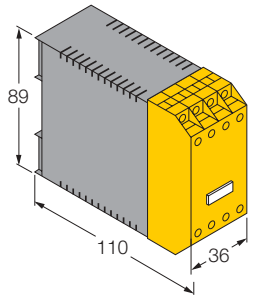

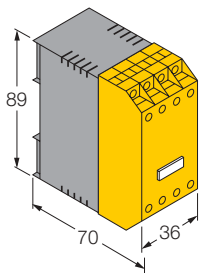

Level Control
MS91-12-R
1-channel

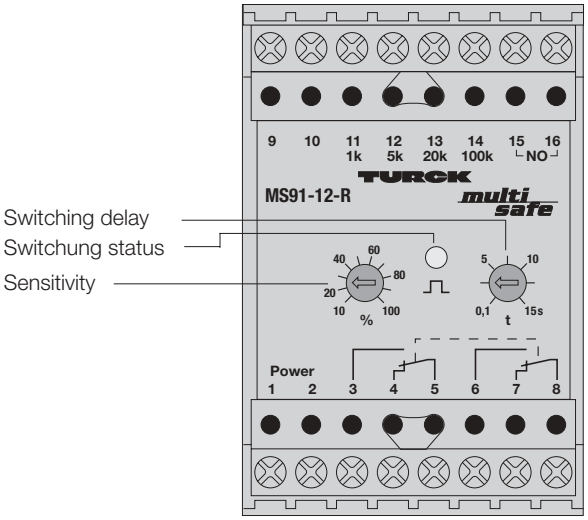

- **1-channel level control**
- **Galvanic isolation between input circuit, output circuit and supply voltage**
- **Adjustable sensitivity range 0.1…100 kΩ**
- **Secure distinction between liquid and foam**
- **Adjustable switch-on and switch-off delay from 0.1…15 s**
- **2 relay outputs, each with 1 SPDT contact**
- **Probe selection via an integrated relay**
- **Universal supply voltage (20...250 VUC)**

The single channel level control MS91-12-R... is used to monitor and regulate the levels of conductive liquids (II). As a dual level regulator, it can be used to control pumps and solenoid valves (I). As a monitoring devices it is designed for run-dry or overflow protection.

The sensitivity (resistance of liquid) is adjustable from 0.1…100 kΩ. One of the four sensitivity ranges is selected by the terminal configuration. Fine adjustment of the switch point within the selected range is achieved with a front cover potentiometer. Thus the level controller provides optimum reliability in differentiating a wide variety of liquids and also in applications requiring distinction between liquid and foam.

The adjustable switch-on and switch-off delay is especially important for turbulent liquid levels. A delay time from 0...15 s can be adjusted via the front cover potentiometer.

The device features two relay outputs with one SPDT contact each. They operate in parallel and provide the switching function.

The output configuration of both outputs can be programmed from NO (with jumper between terminals 15/16) to NC (without jumper between terminals 15/16).

A yellow LED indicates the switching status.

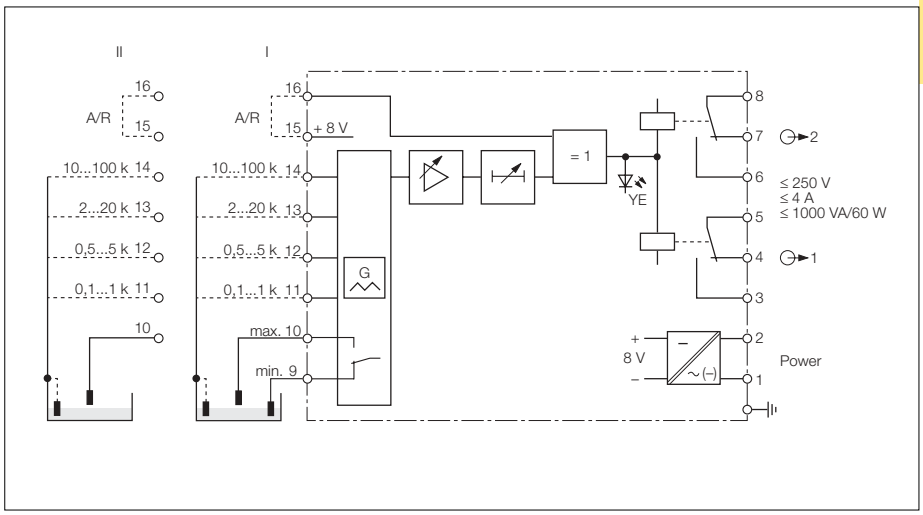

8

Level Control MS91-12-R

Type	MS91-12-R
Ident-no.	5220110
Supply voltage U_B	20...250 VUC
Line frequency (AC)	40...70 Hz
Power consumption	≤ 3 W
Galvanic isolation	between input circuit,output circuit and supply voltage for 250 V_{rms} test voltage 2,5 V_{rms}
Input circuits	
Probe voltage	typ. 5 V_{PP}/100 Hz (triangle)
Sensitivity range (switching threshold)	0,1…100 kΩ (adjustable in 4 ranges)
– Range 1	0.1…1 kΩ
– Range 2	0.5…5 kΩ
– Range 3	2…20 kΩ
– Range 4	10…100 kΩ
Hysteresis	10 %
Switch-on and switch-off delay	0.1…15 s (adjustable)
Output circuits	2 relay outputs
Number of contacts	1 SPDT contact, silver-alloy
Switching voltage	≤ 250 V
Switching current	≤ 4 A
Switching capacity	≤ 1 000 VA/60 W
LED indication	
– Switching status	yellow
Housing	50 mm wide, Polycarbonate/ABS
Mounting	snap-on clamps for top-hat rail (DIN 50022) or screw terminals for panel mounting
Connection	2 x 16 screw terminals
Connection profile	≤ 2 x 2.5 mm² or 2 x 1.5 mm² with wire sleeves
Degree of protection (IEC 60529/EN 60529)	IP20
Operating temperature	-25…+60 °C

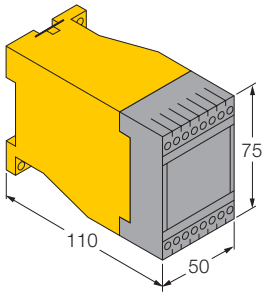

 Hans Turck GmbH & Co.KG • D–45466 Mülheim/Ruhr • Tel. 0208/4952-0 • Fax 0208/4952-264 • E-Mail: turckmh@mail.turck-globe.de • www.turck.com

ACCESSORIES

Hans Turck GmbH & Co.KG • D–45466 Mülheim/Ruhr • Tel. 0208/4952-0 • Fax 0208/4952-264 • E-Mail: turckmh@mail.turck-globe.de • www.turck.com

Resistor Module WM1

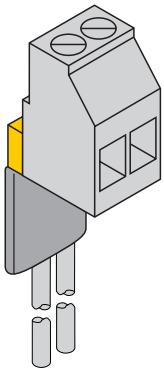

- **Practical tool for line monitoring of a mechanical contact**
- **Connection via cable ends and screw terminals**
- **Compact housing**

The resistor module WM1 is a requisite for line monitoring between a mechanical contact and a signal processor which is equipped with inputs for sensors according to EN 60947-5-6 (NAMUR) and short-circuit and wire-break monitoring features.

The cable between the mechanical contact and the resistor module should be kept short because monitoring of this section is not possible.

Due to its small housing it is possible to integrate the WM1 into the most types of terminal blocks.

Connection is accomplished via the cable ends on the one side and via screw terminals on the other side. Thus the cable ends may be connected directly to the terminals of the mechanical switch, while the cable to the TURCK signal processor is connected to screw terminals.
Due to the symmetrical circuit layout, the output and input are electrically interchangeable.

The resistor module WM1 is specifically designed for connection to TURCK signal processors.

The internal circuitry of the WM1 consists solely of resistors and is classified as simple electrical equipment according to EN 60079-14 and does not require approval. Therefore it may be integrated in intrinsically safe circuits in explosion hazardous areas.

For use in dust hazardous locations (zone 20 to 22) it is required that mounting has to be done in a way, that no dust can form a sediment on the WM1.

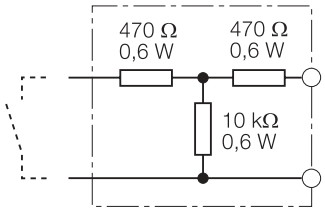

Resistor Module WM1

Type	WM1
Ident-no.	0912101
Input circuit	according to EN 60947-5-6 (NAMUR)
Hazardous area approvals	simple electrical equipment according to EN 60079-14; an approval is not required
– max. input voltage U_i	16 V
– max. input current I_i	60 mA
– max. input capacity P_i	150 mW
– internal inductance/capacitances L_i/C_i	negligible
– temperature class	T6
Housing	plastic cover
Connection	cable ends: 2 x 0.5 mm^2, screw terminals: < 2 x 2.5 mm^2
Cable material	H05 V-K
Degree of protection (IEC 60529/EN 60529)	IP20
Temperature range	-25…+60 °C

Dimensions

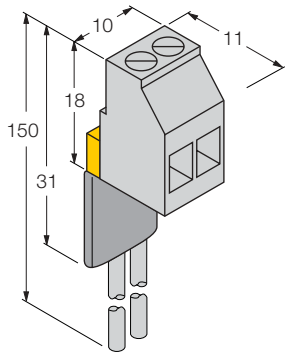

Hans Turck GmbH & Co.KG • D–45466 Mülheim/Ruhr • Tel. 0208/4952-0 • Fax 0208/4952-264 • E-Mail: turckmh@mail.turck-globe.de • www.turck.com

Compact Temperature Detector TRC-P1

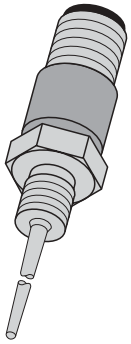

- **Measuring range -50...+120 °C**
- **Threaded connection to medium, G1/8 (UNI 338)**
- **Protection degree IP67**
- **Test voltage 500 V**
- **4-pole connector**
- **For connection to TURCK's Pt100 measuring amplifiers, version *multicart®*, *multimodul* and *interfacemodul***

The compact temperature detectors TRC-P1... serve to detect medium temperatures in a range of -50...+120 °C.

The sensing probe is inserted via a tee piece or a welded pipe socket into the pipe or container. The housing is made of one compact unit and is equipped with a tapered sensing tip.

Compact Temperature Detector

Type	**Ident-no.**
TRC-P1-A-13	9910400
TRC-P1-A-24	9910401

Sensing probe	RTD 1 Pt100
Accuracy class	A
Resistance	100 Ω at 0 °C
Insulation resistance	1 MΩ
Test voltage	500 VDC

Connection	4-pole connector M12 x 1, mounted in Nylon
Connection to medium	G1/8 (UNI 338)
Housing material	stainless steel 1.4401 (AISI316)
Probe length	
– Type: TRC-P1-A-13	13 mm
– Type: TRC-P1-A-24	24 mm

Operating temperature	-50…+120 °C
Degree of protection (IEC 60529/EN 60529)	IP67 at < 90 °C (ambient temperature)

Connectors:		**Ident-no.**
– Female, right-angle, field-wireable	H8241-0	6902600
– Female, straight, field-wireable	H8141-0	6902500
– Female, right-angle, premoulded, 2 m	WWAK4-/P00	8007148
– Female, straight, premoulded, 2 m	WAK4-2/P00	8007046

Dimensions

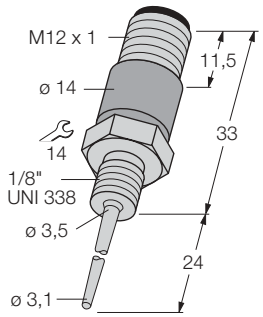

Wiring diagram

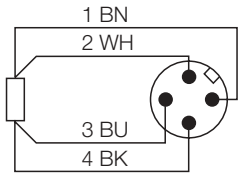

Hans Turck GmbH & Co.KG • D–45466 Mülheim/Ruhr • Tel. 0208/4952-0 • Fax 0208/4952-264 • E-Mail: turckmh@mail.turck-globe.de • www.turck.com

Immersion Electrode EL1/1

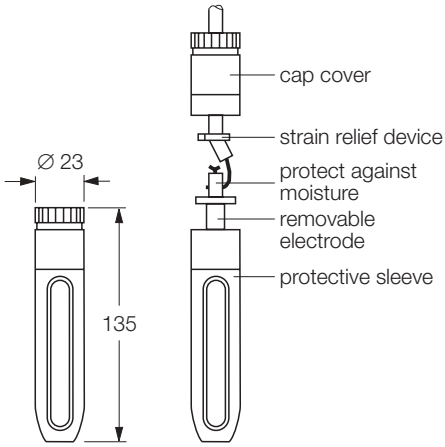

- **Immersion electrode for use in conjunction with TURCK level controls**
- **Temperature range 0...60 °C**

The immersion electrode EL1 is an accessory for TURCK's level controls. The device is particularly suited for use in open containers within a temperature range of 0...60 °C. If required, the connection of the electrode to the single-wire cable can be fully encapsulated for water-proofness by the customer.

Type	EL1/1
Ident-no.	69672
Electrode material	X12CrMoS17
Electrode surface	30 cm^2
Protective sleeve and cap cover	low-pressure polyethylene „Lupolen 8011 Lnt“
Ventilation	via longitudinal slot
Weight	190 g
Note	other versions such as single or multiple electrodes for aggressive media, higher temperatures and extended pressure ranges available on request

9

Hans Turck GmbH & Co.KG • D–45466 Mülheim/Ruhr • Tel. 0208/4952-0 • Fax 0208/4952-264 • E-Mail: turckmh@mail.turck-globe.de • www.turck.com

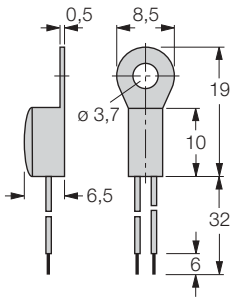

NTC Thermistor M703

The NTC thermistor (Siemens) M 703 serves as a sensor type for the MK44-121-R/... Thermistor relay (page 4-21).

Sensor type	M 703 (Siemens)
Ident-no.	6900198
Connection leads	AWG 30/PTFE, isolated
– Internal conductor material	Nickel
Connection	leads for soldering
Sensor mounting	surface mounting with metal tabs

9

 Hans Turck GmbH & Co.KG • D–45466 Mülheim/Ruhr • Tel. 0208/4952-0 • Fax 0208/4952-264 • E-Mail: turckmh@mail.turck-globe.de • www.turck.com

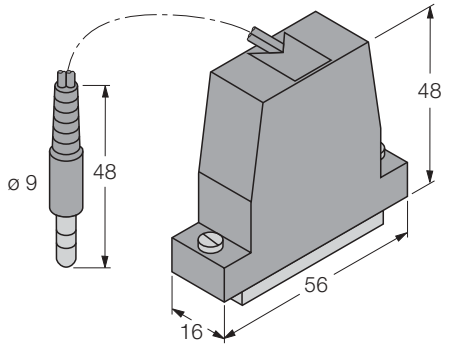

IM-PROG Programming Adapter for TURCK *interfacemodul* Series

- **Adapter for parameterisation of TURCK *interfacemodul* series devices via the serial PC interface**
- **Galvanically isolated signal transmission**

The IM-PROG serves the parameterisation of TURCK *interfacemodul* series devices via the serial interface of a PC.

The *interfacemodul* to be parameterised is connected to the serial interface of the PC via the IM-PROG using the included connection cable.

The *interfacemodul* must be connected to the voltage supply for parameterisation.

IM-PROG converts the signal level and implements the galvanic isolation between PC and the *interfacemodul*.

Type Ident-no.	IM-PROG 6890422
Connection – *interfacemodul* – PC	 3.5 mm jack 25-pole RS232 interface or via supplied adapter on the 9-pole interface
Cable length	1.2 m
Galvanic isolation	60 V

 Hans Turck GmbH & Co.KG • D–45466 Mülheim/Ruhr • Tel. 0208/4952-0 • Fax 0208/4952-264 • E-Mail: turckmh@mail.turck-globe.de • www.turck.com

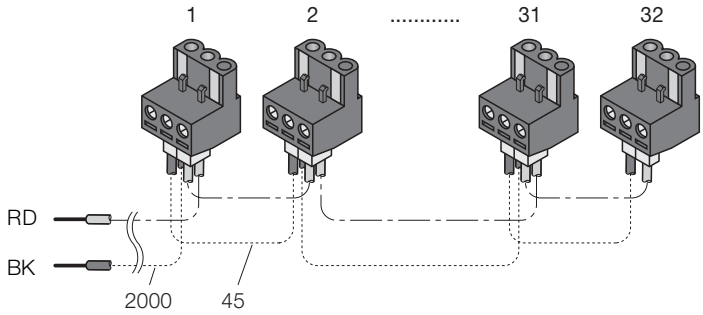

Power-Bus for the TURCK *interfacemodul* Series PB-08/03 PB-16/03 PB-32/03

- **Voltage supply for processors of the *interfacemodul* series**
- **8, 16 or 32 devices connectable**
- **Cable length between voltage supply and Power-Bus: 2 m**

The TURCK Power-Bus serves for voltage supply to processors of the *interfacemodul* series.

The Power-Bus can supply voltage up to 32 devices in 18 mm housings.

The following device types are available:
– PB-08/03: 8 module connections
– PB-16/03: 16 module connections
– PB-32/03: 32 module connections.

The cable length between the voltage supply and Power-Bus is 2 m. The cable length is approx. 45 mm between the individual terminals.

Type	PB-08/03	PB-16/03	PB-32/03
Ident-no.	6900370	6900371	6900372
Cable			
– Cable cross-section	2 x 0.75 mm²		
– Cable type	H 05 V-K		
– Cable lenght between terminals	approx. 45 mm		
– Cable length between supply voltage and Power-Bus	2 m		
– Input voltage	0...230 V AC/DC		
– Output voltage	0...230 V AC/DC		
– Cable sheath colour	RD (with DC $+U_B$) BK (with DC $-U_B$)		
Terminals	3-pole terminal blocks with coding		

9

 Hans Turck GmbH & Co.KG • D–45466 Mülheim/Ruhr • Tel. 0208/4952-0 • Fax 0208/4952-264 • E-Mail: turckmh@mail.turck-globe.de • www.turck.com

Frequency Generator FG1

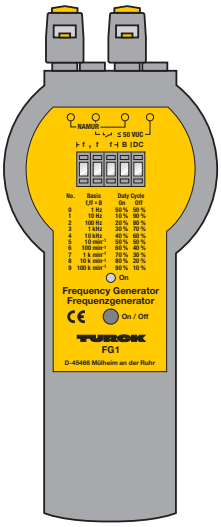

- **Simulation of sensors conform to EN 60947-5-6 (NAMUR) or NO contacts**
- **Frequency range 0.01...99900 Hz, or 0.1...999000 min^{-1}**
- **Internal voltage supply via 9 V block battery (Type 6 LR 61)**

The TURCK frequency generator FG1 serves the simulation of sensors to EN 60947-5-6 (NAMUR) or NO contacts. The NO output is protected by a Zener diode and a self-restoring fuse which activates at approx. 200 mA.

Isolating switching amplifiers or counter modules, for example, can be function tested with the frequency generator.

The decimal positions 0.01 to 9.99 of the frequency, the frequency basis 1 Hz to 10 kHz (or 10 min^{-1} (rpm) to 100000 min^{-1} (rpm)) as well as various mark-space ratios in percent can be set via the coding switch.

The frequency generator is supplied via a 9 V block battery which allows operation for about 60 hours with its capacity of 500 mAh.

The device is switched on and off via a front mounted pushbutton. The device switches off automatically after 20 minutes.

The operational readiness of the device is indicated by a front side LED which lights green when the device is switched on.

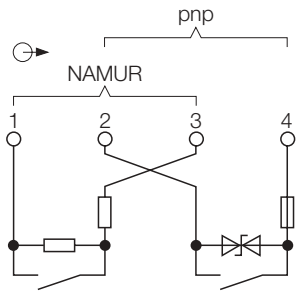

Frequency Generator FG1

Type	FG1
Ident-no.	6900277

Supply voltage U_B	from 9 V block battery (6 LR 61)
Current consumption	approx. 8 mA (A block with 500 mAh capacity has capacity for approx. 60 hours)

Frequency range	0.01...99900 Hz (0.1...999000 min^{-1})
Adjustment possibilities	
– Frequency decimal place	via coding switch
– Frequency basis	via coding switch
– Mark-space ration in percent	via coding switch

Coding switch position	Frequency decimal place	Frequency base	Mark-space ratio in %
0	0.01...9.99	1 Hz	50 % On / 50 % Off
1	0.01...9.99	10 Hz	10 % On / 90 % Off
2	0.01...9.99	100 Hz	20 % On / 80 % Off
3	0.01...9.99	1 kHz	30 % On / 70 % Off
4	0.01...9.99	10 kHz	40 % On / 60 % Off
5	0.01...9.99	10 min^{-1}	50 % On / 50 % Off
6	0.01...9.99	100 min^{-1}	60 % On / 40 % Off
7	0.01...9.99	1000 min^{-1}	70 % On / 30 % Off
8	0.01...9.99	10000 min^{-1}	80 % On / 20 % Off
9	0.01...9.99	100000 min^{-1}	90 % On / 10 % Off

Accuracy	typically 0.01 % minimum, 0.05 % across the entire adjustment range

Output circuits	
NAMUR (Socket 1 and 3)	Simulation of sensors to EN 60947-5-6 (NAMUR)
NO contact (Socket 2 and 4)	Simulation of NO contacts
NO contact protection circuitry	Zener diode and self-restoring fuse, activates at approx. 200 mA

LED indications	
– Power “ON”	green

Housing	
Material	ABS (Flammability class UL 94 HB)
Materialcover disc	Acrylic, transparent
Operating temperature range	-25…+75 °C

Dimensions

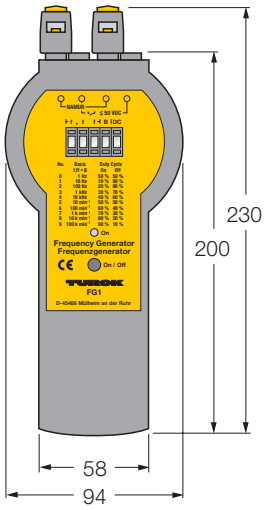

PACT*ware*™ DTM Professional License

- **License key for activation of special functions:**
  - **Monitor function**
  - **Print function**
  - **Trend viewer**
  - **Store function**

PACT*ware*™ stands for "Process Automation Configuration Tool" and is an open-source configuration software in which the manufacturers can integrate the operation of their field devices. The optimisation of the device operation is the primary objective with the PACT*ware*™ concept.

Contrary to the concept of writing to devices via a text file (Device Description = DD), PACT*ware*™ uses a common interface (Field Device Tool = FDT) between the core program and the individual software modules for device operation. Modern and user-friendly operating concepts can be implemented as a result. FDT specifies an interface in order to use the software modules for field devices (Device Type Manager = DTM) in various applications from differing manufacturers.

The DTMs which are required are available in a basic version (with functional feature limitations) as well as a professional version.

The PACT*ware* ™ core program and the basic DTMs can be downloaded free of charge on the Internet at www.turck.de.

The professional variant which includes special features can be activated by a license key which you must purchase.

The special functions are:

- **Monitor function:** The current measured value and the state of the inputs and outputs can be viewed in a window on the monitor. Cyclic-refresh can be deactivated.
- **Print function:** The parameters can be printed in three categories:
  - Offline parameterisation (all parameters)
  - Measured value (frequency/rotary speed, output current, measuring range of the output current in %, output voltage, measuring range of the output voltage in %)
  - Diagnostics (all diagnostics bits)
- **Trend viewer:** A selection of the measured values can be recorded cyclically. The changes to the values can be observed online. Value curves which are recorded can be saved in a specially formatted text file.
- **Save function:** Parameters are saved with this function.

The professional function is activated by a double click on the licence file of the CD.

DTM Professional License for:

IM34...	Ident.-No.: 6900404
MC25...	Ident.-No.: 6900405

 Hans Turck GmbH & Co.KG • D–45466 Mülheim/Ruhr • Tel. 0208/4952-0 • Fax 0208/4952-264 • E-Mail: turckmh@mail.turck-globe.de • www.turck.com

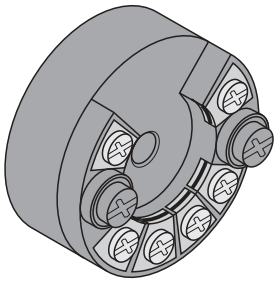

Temperature Transducer KMP-Ex0-Li

- **4...20 mA temperature transducer for Pt100 sensors**
- **Intrinsically safe transducer II 1 G EEx ia IIC T5/T6**
- **For connection of 2-, 3- or 4-wire sensors**
- **Increased accuracy < 0.25 °C**
- **Configuration via PC**
- **Excellent temperature stability**
- **Complete galvanic isolation**
- **Terminal housing, type B**

The intrinsically safe Pt100 temperature transducer KMP-Ex0-Li converts temperature-dependent signals from Pt100 detectors and provides these as temperature-linear 4...20 mA current signals.

The transducer is integrated in a terminal housing, type B. The housing has a centre hole with a diameter of Ø 6.3 mm for cable or sensor insertion. 2-, 3- or 4-wire Pt100 detectors may be connected to the input circuit of the temperature transducer.

All adjustments are programmed via the programming device KM-IM232 using a personal computer.

The following functions can be adjusted:

- number of detector cables
- line resistance (2-wire connection)
- performance of analogue output during an error condition
- measuring range
- measuring unit
- damping
- offset
- status indication
- 15-digit TAG number

Supply and signal isolation is achieved with measuring transducers, series MK33 and MC33, via a 2-wire cable. An additional power supply is not needed.

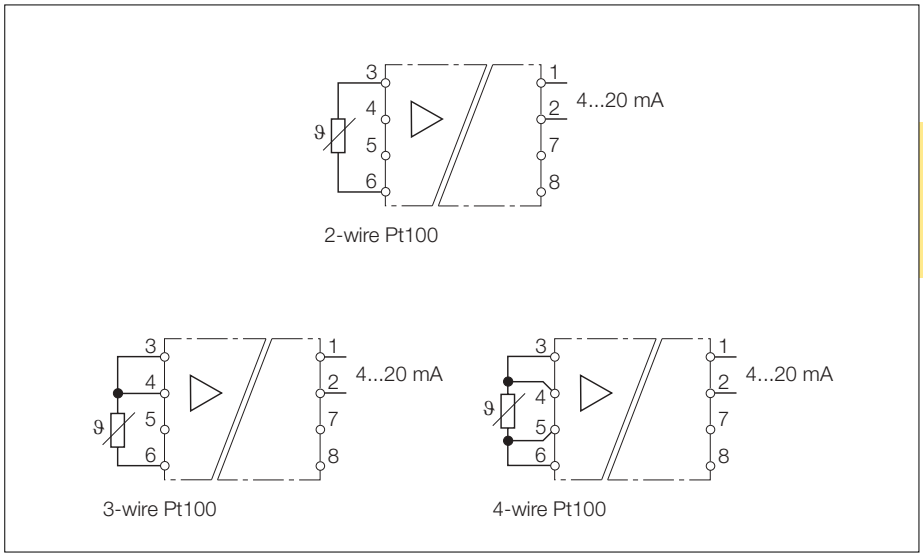

9

Temperature Transducers

Type	KMP-Ex0-Li
Ident-no.	7506620
Input circuits	intrinsically safe per EN 50014/20
Sensor element	Pt100 IEC/EN/DIN 60741-2
Sensor current	approx. 300 µA
Line resistance	< 20 Ω, adjustable
Resolution	14 bits
Short-circuit detection	< -225 °C
Wire-break detection	> 875 °C
Output circuits	
Accuracy	12 bits
Signal range	4...20 mA, 2-wire
Supply voltage U_B	8...30 VDC, reverse-polarity protected
Ripple W_{pp}	≤ 3 V_{pp}
Ex-approval acc. to certificate of conformity	DEMKO 00 ATEX 128104X
Maximum values	
– No-load voltage U_i	28 V
– Short-circuit current I_i	0.1 A
– Power P_{max}	0.7 W
– Internal inductance L_i	≤ 10 µH
– Internal capacitance C_i	≤ 10 nF
Explosion protection type	EEx ia IIC T1...T5: $-40 < T_u < +85$ °C
	EEx ia IIC T6: $-40 < T_u < +50$ °C
Marking of device	II 1 G EEx ia IIC T5/T6
Transfer characteristics	
Operating range	-200...850 °C
Measuring range	adjustable via software
Smallest range	25 °C
Accuracy	≤ 0.1 % of measuring range
Repeat accuracy	< 0.1 °C
Offset adjustment	± 10 °C, adjustable
Damping	0...30 s, adjustable
Supply voltage effect	0.01 %/V
Temperature effect	typ. 0.003 %/°C; max. 0.01 %/°C
Availability	10 s
Housing style	for terminal connection heads, type B (DIN 43729)
Dimensions	Ø 44 mm x 19 mm
Mounting	vibration protected spring-mounted screws
Connection profile	≤ 2 x 2.5 mm² or 2 x 1.5 mm² with wire sleeves
Protection degree (IEC 60529/EN 60529)	housing IP40; terminals IP00
Operating temperature	-40...+85 °C
Humidity (IEC 68-2-6)	< 98 %
Vibration resistance (IEC 68-2-6)	GL, Test 2
Long term test (IEC 770 6.3.2)	●

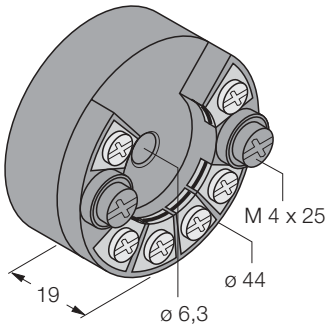

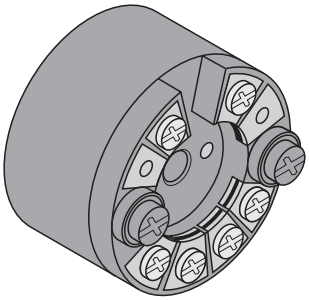

Temperature Transducer KMU-Ex0-Li

- **Universal 4...20 mA temperature transducer**
- **Intrinsically safe transducer II 1 G EEx ia IIC T5/T6**
- **For connection of thermoelements, 2-, 3- or 4-wire Pt100 components, mV inputs or variable resistors**
- **Insulation voltage 3.75 kVAC**
- **Configuration via PC**
- **Configurable linearization**
- **Excellent temperature stability**
- **Internal or external reference point**
- **Complete galvanic isolation**
- **Terminal housing, type B**

The intrinsically safe universal transducer KMU-Ex0-Li converts temperature-dependent signals from Pt100 detectors, thermoelements, resistor inputs or mV inputs and provides these as 4...20 mA current signals.

The transducer is integrated in a terminal housing, type B. The housing has a centre hole with a diameter of Ø 6.3 mm for cable or sensor insertion.

All adjustments are programmed via the programming device KM-IM232 using a personal computer.

The following functions can be adjusted:

- type of detector
- linearization
- number of detector cables
- line resistance (2-wire connection)
- performance of analogue output during an error condition
- measuring range
- measuring unit
- damping
- offset
- status indication
- 15-digit TAG number

Application

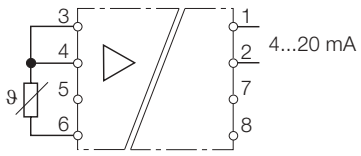

3-wire Pt100

Temperature Transducers

Wiring Diagrams

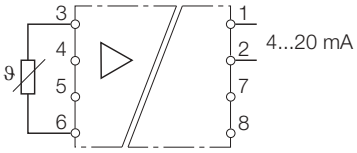

2-wire Pt100

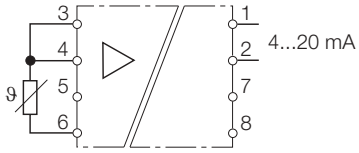

3-wire Pt100

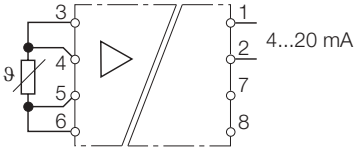

4-wire Pt100

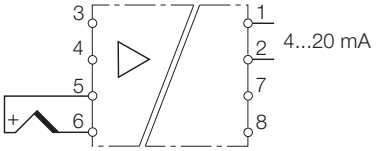

thermoelement with internal cold junction compensation

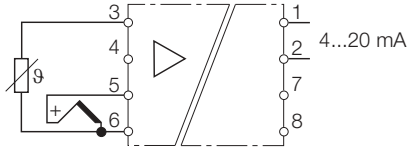

thermoelement with external compensation

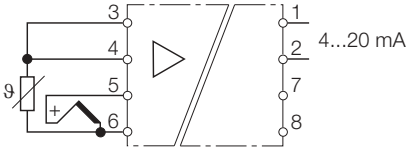

thermoelement with external 3-wire compensation

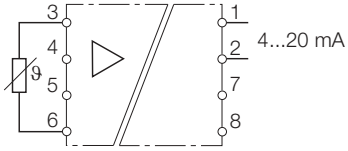

temperature-dependent resistor without cable compensation

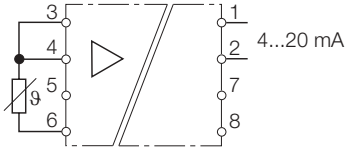

temperature-dependent 3-wire resistor

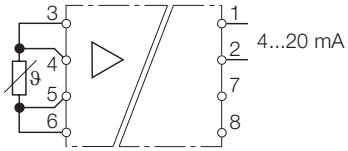

temperature-dependent 4-wire resistor

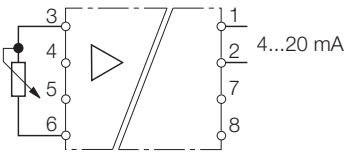

resistor without compensation

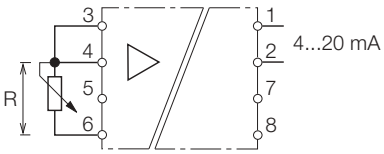

3-wire resistor

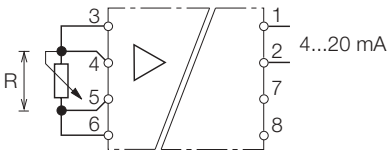

4-wire resistor

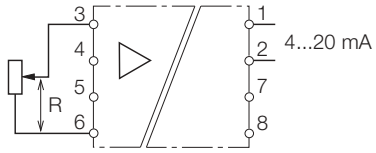

potentiometer without compensation

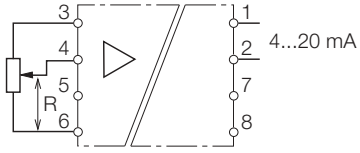

3-wire potentiometer

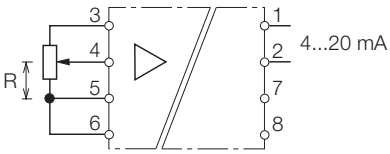

4-wire potentiometer

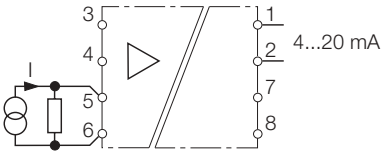

current measurement

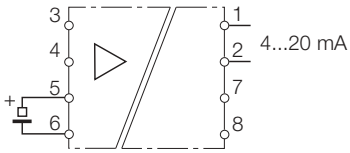

voltage measurement

Technical Data

Type	KMU-Ex0-Li
Ident-no.	7506621
Input circuits	intrinsically safe per EN 50014/20
Sensor element	as specified
Sensor current	approx. 200 µA for resistance temperature detectors
Line resistance	for T > 600 °C: < 10 Ω/line, adjustable
	for T < 600 °C: < 30 Ω/line, adjustable
Resolution	16 bits
Output circuits	
Accuracy	12 bits
Signal range	4...20 mA/20...4 mA, 2-wire
Supply voltage U_B	6.5...35 VDC, reverse-polarity protected
Ripple W_{pp}	≤ 3 V_{pp}
TAG number	15 digits
Ex-approval acc. to certificate of conformity	DEMKO 00 ATEX 128102X
Maximum values (terminals 1 and 2)	
– No-load voltage U_i	≤ 30 V
– Short-circuit current I_i	≤ 0.1 A
– Power P_{max}	≤ 0.75 W
– Internal inductance L_i	≤ 15 µH
– Internal capacitance C_i	≤ 2 nF
Explosion protection type	EEx ia IIC T1...T5: -40 < T_u < +85 °C
	EEx ia IIC T6: -40 < T_u < +50 °C
Marking of device	II 1 G EEx ia IIC T5/T6
Sensor data (terminals 3, 4, 5 and 6)	
$U_{max\ out}$	≤ 6.2 VDC
$I_{max\ out}$	≤ 20 mA
$P_{max\ out}$	≤ 30 mW
C_0	≤ 5 µF
L_0	≤ 50 mH
Transfer characteristics	
Operating range	see chart on next page
Measuring range	adjustable via software
Repeat accuracy	< 0.05 °C
Damping	0...30 s, adjustable
Temperature effect	typ. 0.003 %/°C; max. 0.01 %/°C
Rise time (10 %...90 %)	Pt100 = 1 s, T/C = 1.6 s
Availability	1.8...3.9 s
Housing style	for terminal connection heads, type B (DIN 43729)
Dimensions	Ø 44 mm x 26.3 mm
Mounting	vibration protected spring-mounted screws
Connection	flat terminals with self-lifting pressure plates
Connection profile	≤ 2 x 1.5 mm²
Protection degree (IEC 60529/EN 60529)	housing IP55; terminals IP10
Operating temperature	-40...+85 °C
Humidity (IEC 68-2-6)	< 98 %
Vibration resistance	Lloyds Register Test 2

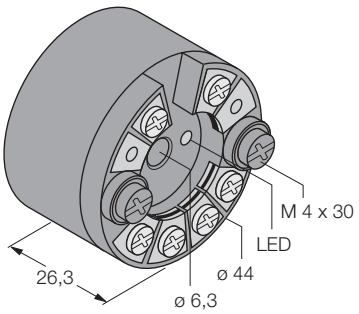

9

Temperature Transducers

Operating Ranges

Type	Standard	Range	Smallest range	Accuracy	Resolution
Pt25...1000	DIN/EN/IEC 60751	-200...+850 °C [1])	10 °C	0.1 °C	0.1 °C
Pt25...1000	a = 0.003902	-200...+850 °C [1])	10 °C	0.1 °C	0.1 °C
Pt25...1000	a = 0.003916	-200...+850 °C [1])	10 °C	0.1 °C	0.1 °C
Ni25...1000	DIN 43760	-50...+250 °C	10 °C	0.1 °C	0.1 °C
Cu25...1000	0.428 Ω/°C	-50...+200 °C	10 °C	0.1 °C	0.1 °C
B (PtRh30-Pt)	IEC 584	+100...1820 °C	50 °C	2 °C	0.1 °C
C (W5-Re)	ASTM 988	0...+2300 °C	100 °C	2 °C	0.1 °C
D (W3-Re)	ASTM 988	0...+2300 °C	100 °C	2 °C	0.1 °C
E (NiCr-CuNi)	IEC 584	-270...+900 °C	50 °C	1 °C	0.1 °C
J (Fe-CuNi)	IEC 584	-210...+1200 °C	50 °C	1 °C	0.1 °C
K (NiCr-Ni)	IEC 584	-250...+1370 °C	50 °C	1 °C	0.1 °C
L (Fe-CuNi)	DIN 43710	-200...+900 °C	50 °C	1 °C	0.1 °C
N (NiCrSi-NiSi)	IEC 584	-200...+1300 °C	50 °C	1 °C	0.1 °C
R (PtRh13-Pt)	IEC 584	-50...+1750 °C	100 °C	2 °C	0.1 °C
S (PTRh10-Pt)	IEC 584	-50...+1750 °C	100 °C	2 °C	0.1 °C
T (Cu-CuNi)	IEC 584	-250...+400 °C	40 °C	1 °C	0.1 °C
U (Cu-CuNi)	DIN 43710	-200...+600 °C	50 °C	1 °C	0.1 °C
Lin. Voltage -10...70 mV		-10...70 mV	2 mV	0.04 mV	0.1 mV
Lin. Voltage -0.1...1.1 V		-0.1...1.1 mV	20 mV	0.4 mV	1 mV
Lin. Resistance 0...390 Ω		0...390 Ω	5 Ω	0.05 Ω	0.01 Ω
Lin. Resistance 0...2200 Ω		0...2200 Ω	25 Ω	0.25 Ω	0.1 Ω

[1]) The maximum termperature range of 500...1000 °C detectors is limited, e.g. a Pt1000 detector has a range of up to 320 °C.

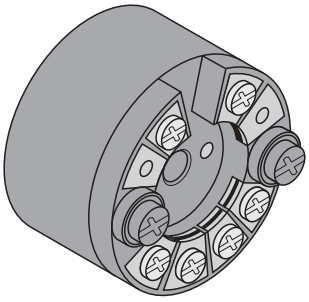

HART® Temperature Transducer KMU-Ex0-HLi

- **Universal 4...20 mA HART® transducer**
- **Intrinsically safe transducer II 1 G EEx ia IIC T5/T6**
- **For connection of thermoelements, 2-, 3- or 4-wire Pt100 components, mV inputs or variable resistors**
- **Insulation voltage 3.75 kVAC**
- **Configuration via PC**
- **Configurable linearization**
- **Excellent temperature stability**
- **Internal or external reference point**
- **Complete galvanic isolation**
- **Terminal housing, type B**

The intrinsically safe universal HART® transducer KMU-Ex0-HLi converts temperature-dependent signals from Pt100 detectors, thermoelements, resistor inputs or mV inputs and provides these as 4...20 mA current signals.

The transducer is integrated in a terminal housing, type B. The housing has a centre hole with a diameter of Ø 6.3 mm for cable or sensor insertion.

All adjustments are programmed via the programming device KM-IM232 using a personal computer.

The following functions can be adjusted:

- type of detector
- linearization
- number of detector cables
- line resistance (2-wire connection)
- performance of analogue output during an error condition
- measuring range
- measuring unit
- damping
- offset
- status indication
- 15-digit TAG number

HART® communication provides the following possibilities:
- online calibration
- online adjustment
- transmitter configuration
- online process calibration
- multidrop application in 2-wire networks

Application

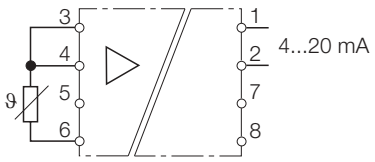

3-wire Pt100

Temperature Transducers

Wiring Diagrams

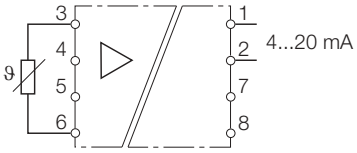

2-wire Pt100

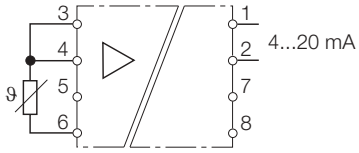

3-wire Pt100

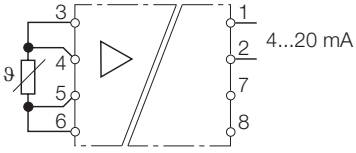

4-wire Pt100

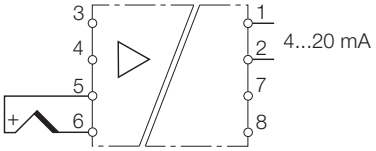

thermoelement with internal cold junction compensation

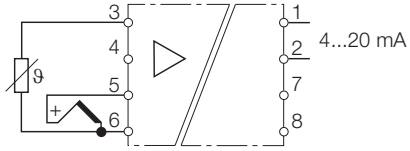

thermoelement with external compensation

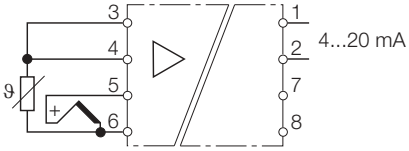

thermoelement with external 3-wire compensation

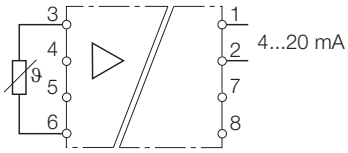

temperature-dependent resistor without cable compensation

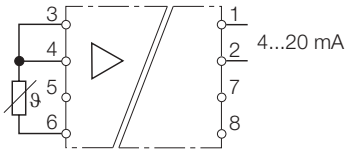

temperature-dependent 3-wire resistor

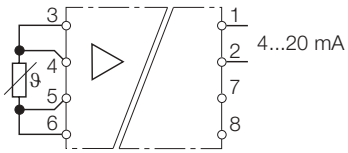

temperature-dependent 4-wire resistor

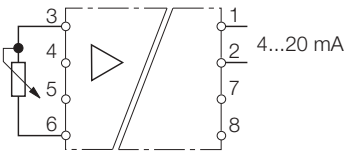

resistor without compensation

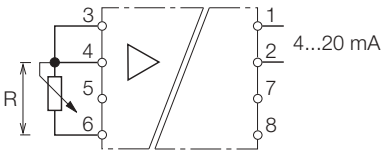

3-wire resistor

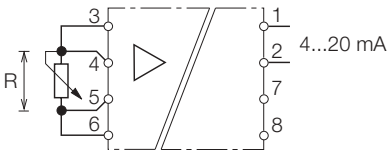

4-wire resistor

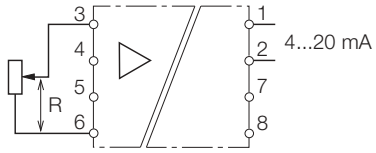

potentiometer without compensation

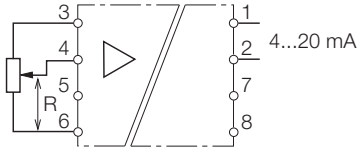

3-wire potentiometer

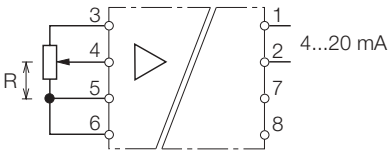

4-wire potentiometer

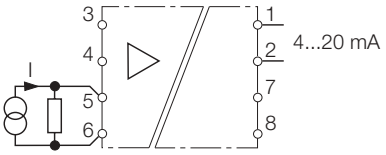

current measurement

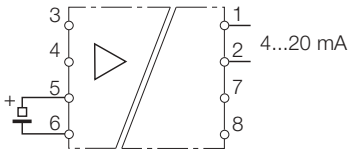

voltage measurement

Technical Data

Type	KMU-Ex0-HLi
Ident-no.	7506622
Input circuits	intrinsically safe per EN 50014/20
Sensor element	as specified
Sensor current	approx. 200 µA for resistance temperature detectors
Line resistance	for T > 600 °C: < 10 Ω/line, adjustable
	for T < 600 °C: < 30 Ω/line, adjustable
Resolution	16 bits
Output circuits	
Accuracy	12 bits
Signal range	4...20 mA/20...4 mA, 2-wire
Supply voltage U_B	6.5...30 VDC, reverse-polarity protected
Ripple W_{pp}	≤ 3 V_{pp}
Ex-approval acc. to certificate of conformity	DEMKO 00 ATEX 128100X
Maximum values (terminals 1 and 2)	
– No-load voltage U_i	≤ 30 V
– Short-circuit current I_i	≤ 0.1 A
– Power P_{max}	≤ 0.75 W
– Internal inductance L_i	≤ 15 µH
– Internal capacitance C_i	≤ 2 nF
Explosion protection type	EEx ia IIC T1...T5: -40 < T_u < +85 °C
	EEx ia IIC T6: -40 < T_u < +50 °C
Marking of device	II 1 G EEx ia IIC T5/T6
Sensor data (terminals 3, 4, 5 and 6)	
$U_{max\ out}$	≤ 6.2 VDC
$I_{max\ out}$	≤ 20 mA
$P_{max\ out}$	≤ 30 mW
C_0	≤ 10 µF
L_0	≤ 50 mH
Transfer characteristics	
Operating range	see chart on next page
Measuring range	programmable via software
Repeat accuracy	< 0.05 °C
Damping	0...30 s adjustable
Temperature effect	typ. 0.003 %/°C; max. 0.01 %/°C
Rise time (10 %...90 %)	Pt100 = 1 s, T/C = 1.6 s
Availability	1.8...3.9 s
HART® characteristics	
Protocol	HCF standard, Rev. 5
Parameters (adjustable)	read serial number
	read/set user ID
	read/set configuration
	read input value
	read output value
	list input signal
	2-point sensor adjustment
	2-point current adjustment
Housing style	for terminal connection heads, type B (DIN 43729)
Dimensions	Ø 44 mm x 26.3 mm
Mounting	vibration protected spring-mounted screws
Connection	flat terminals with self-lifting pressure plates
Connection profile	≤ 2 x 1.5 mm²
Protection degree (IEC 60529/EN 60529)	housing IP55; connections IP10
Operating temperature	-40...+85 °C
Humidity (IEC 68-2-6)	< 98 %
Vibration resistance	Lloyds Register Test 2

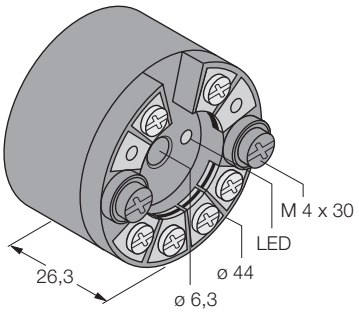

9

Temperature Transducers

Operating Ranges

Type	Standard	Range	Smallest range	Accuracy	Resolution
Pt25...1000	DIN/EN/IEC 60751	-200...+850 °C [1])	10 °C	0.1 °C	0.1 °C
Pt25...1000	a = 0.003902	-200...+850 °C [1])	10 °C	0.1 °C	0.1 °C
Pt25...1000	a = 0.003916	-200...+850 °C [1])	10 °C	0.1 °C	0.1 °C
Ni25...1000	DIN 43760	-50...+250 °C	10 °C	0.1 °C	0.1 °C
Cu25...1000	0.428 Ω/°C	-50...+200 °C	10 °C	0.1 °C	0.1 °C
B (PtRh30-Pt)	IEC 584	+100...1820 °C	50 °C	2 °C	0.1 °C
C (W5-Re)	ASTM 988	0...+2300 °C	100 °C	2 °C	0.1 °C
D (W3-Re)	ASTM 988	0...+2300 °C	100 °C	2 °C	0.1 °C
E (NiCr-CuNi)	IEC 584	-270...+900 °C	50 °C	1 °C	0.1 °C
J (Fe-CuNi)	IEC 584	-210...+1200 °C	50 °C	1 °C	0.1 °C
K (NiCr-Ni)	IEC 584	-250...+1370 °C	50 °C	1 °C	0.1 °C
L (Fe-CuNi)	DIN 43710	-200...+900 °C	50 °C	1 °C	0.1 °C
N (NiCrSi-NiSi)	IEC 584	-200...+1300 °C	50 °C	1 °C	0.1 °C
R (PtRh13-Pt)	IEC 584	-50...+1750 °C	100 °C	2 °C	0.1 °C
S (PTRh10-Pt)	IEC 584	-50...+1750 °C	100 °C	2 °C	0.1 °C
T (Cu-CuNi)	IEC 584	-250...+400 °C	40 °C	1 °C	0.1 °C
U (Cu-CuNi)	DIN 43710	-200...+600 °C	50 °C	1 °C	0.1 °C
Lin. voltage -10...70 mV		-10...70 mV	2 mV	0.04 mV	0.1 mV
Lin. voltage -0.1...1.1 V		-0.1...1.1 mV	20 mV	0.4 mV	1 mV
Lin. resistance 0...390 Ω		0...390 Ω	5 Ω	0.05 Ω	0.01 Ω
Lin. resistance 0...2200 Ω		0...2200 Ω	25 Ω	0.25 Ω	0.1 Ω

[1]) The maximum termperature range of 500...1000 °C detectors is limited, e.g. a Pt1000 detector has a range of up to 320 °C.

Standard HART® Configurator

It is possible to use either a standard HART® configurator (see drawing) or TURCK's software for PC.

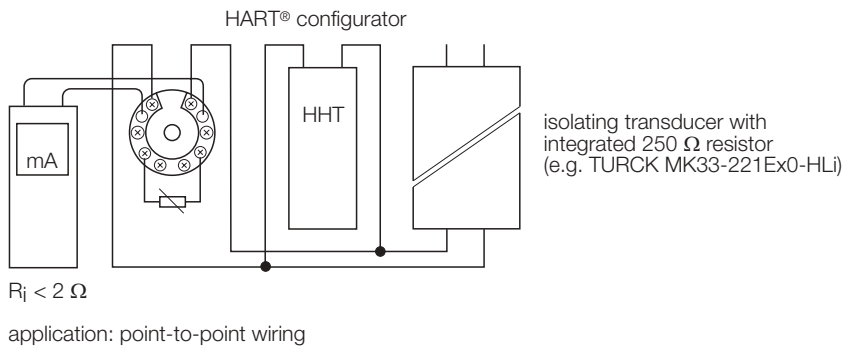

Programming Device KM-IM232

- **For configuration of TURCK temperature transducers series KM...**
- **Configuration via PC**
- **RS232C interface**
- **Simple operation**

The KM-IM232 programming device is designed for configuration of TURCK temperature transducers.

Connection to a conventional PC is established via a 9-pole RS232C interface.

The software is based on Windows and includes extensive self-explanatory help menus in three languages.

The selected configuration can be saved under a user-specified file name.

Suspend power supply to the temperature transducer via the isolating transducer during configuration.

Configuration may only be carried out in the non-hazardous area.

If the power provided via the RS232C interface is not sufficient for configuration, it is also possible to connect a 9 V battery.

The PC may also be used as a data logger. This function is set via the software and enables the user to view measuring results or to enter the set-up mode for calibration of the temperature transducer. The data logger function is available with the following transducer types:
– KMU-Ex0-Li
– KMP-Ex0-Li
– KMU-Ex0-HLi

Connection of temperature transducers

KMU-Ex0-HLi
KMU-Ex0-Li

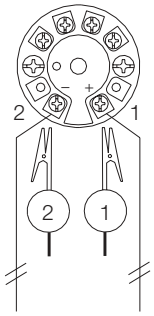

KMP-Ex0-Li

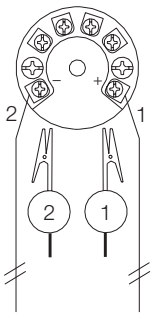

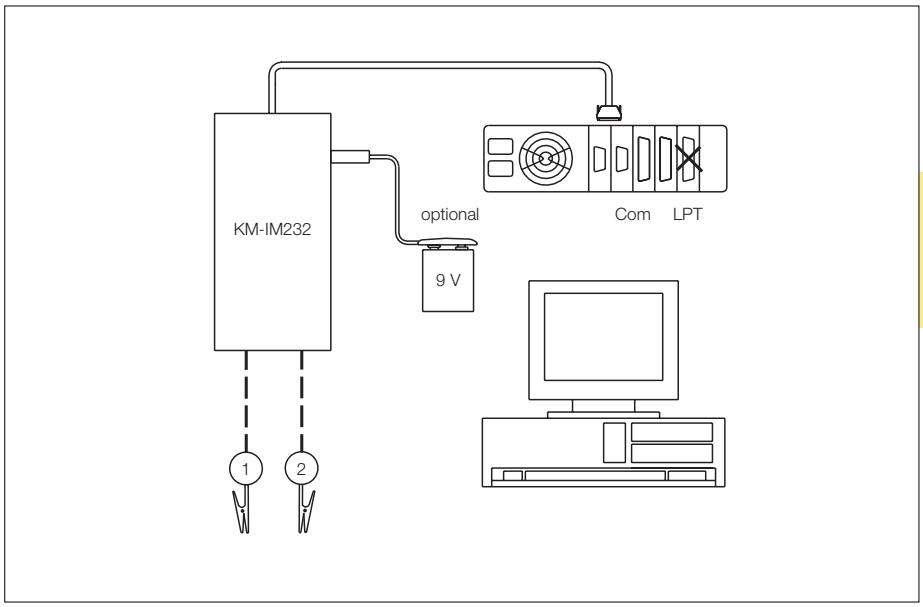

9

 Hans Turck GmbH & Co.KG • D–45466 Mülheim/Ruhr • Tel. 0208/4952-0 • Fax 0208/4952-264 • E-Mail: turckmh@mail.turck-globe.de • www.turck.com

INDEX OF TYPES

INDEX OF TYPES

Index of Types

Type	page
DTM-Professional-Licence	9 – 17
EL1/1	9 – 7
FG1	9 – 15
IM12-17-R/230VAC	1 – 9
IM12-17-R/24VDC	1 – 9
IM12-18-R/230VAC	1 – 11
IM12-22Ex-R/230VAC	1 – 13
IM12-22Ex-R/24VDC	1 – 13
IM1-121Ex-R/230VAC	1 – 15
IM1-121Ex-R/24VDC	1 – 15
IM1-22Ex-R/230VAC	1 – 17
IM1-22Ex-R/24VDC	1 – 17
IM1-44Ex-R	1 – 19
IM1-44Ex-T	1 – 21
IM1-451Ex-R	1 – 23
IM1-451Ex-T	1 – 25
IM33-11Ex-Hi/24VDC	3 – 25
IM33-22Ex-Hi/24VDC	3 – 27
IM33-FSD-Ex/L	3 – 29
IM34-11Ex-Ci	3 – 43
IM34-11Ex-i	3 – 37
IM34-12Ex-CRi	3 – 43
IM34-12-Ex-Ri	3 – 37
IM35-11Ex-Hi/24VDC	3 – 49
IM35-22Ex-Hi/24VDC	3 – 51
IM36-11Ex-i/24VDC	3 – 59
IM36-11Ex-U/24VDC	3 – 59
IM43-13-R	4 – 3
IM43-13-SR	4 – 5
IM43-14-Ri	4 – 3
IM43-14-SRi	4 – 5
IM73-12-R/230VAC	6 – 7
IM73-12-R/24VDC	6 – 7
IM82-2414/94-265VAC	7 – 13
IM-PROG	9 – 11
KM-IM232	9 – 29
KMP-Ex0-Li	9 – 19
KMU-Ex0-HLi	9 – 25
KMU-Ex0-Li	9 – 21
M703	9 – 9
MC13-241AEx0-R	1 – 6
MC13-241AEx0-T	1 – 6
MC13-41AEx0-RP	1 – 6
MC13-441AEx0-R	1 – 6
MC13-441AEx0-T	1 – 6
MC13-451AEx0-P	1 – 6
MC13-451AEx0-R	1 – 6
MC13-451AEx0-RP	1 – 6
MC13-451AEx0-T	1 – 6
MC13-452AEx0-RP	1 – 6
MC13-481AEx0-R	1 – 6
MC13-8AEx0-P	1 – 6
MC13-8AEx0-R	1 – 6
MC16-41Ex0-RP	1 – 6
MC16-42Ex0-TP	1 – 6
MC25-144-LRP	2 – 2
MC25-144Ex0-LRP	2 – 2
MC30-28-Li	3 – 5
MC30-SG20-i	3 – 5
MC31-11Ex0-Ri	3 – 5
MC31-121Ex0-LRP	3 – 5

Type	page
MC31-22Ex0-i	3 – 5
MC31-22Ex0-U	3 – 5
MC32-11Ex0-Ri	3 – 5
MC32-121Ex0-LRP	3 – 5
MC32-121Ex0-RP	3 – 5
MC32-121Ex0-RP	4 – 2
MC32-12Ex0-LRP	3 – 5
MC33-11Ex0-Ri	3 – 5
MC33-121Ex0-LRP	3 – 5
MC33-12Ex0-i	3 – 5
MC33-22Ex0-i	3 – 5
MC34-11Ex0-Ri	3 – 5
MC34-121Ex0-LRP	3 – 5
MC35-22Ex0-i	3 – 5
MC37-121Ex0-LRP	3 – 5
MC43-221-RP	4 – 2
MC72-41Ex-T	5 – 3
MC72-42Ex-T	5 – 3
MC72-43Ex-T	5 – 3
MC72-44Ex-T	5 – 3
MC73-441Ex0-R	6 – 3
MC73-442Ex0-R	6 – 3
MC73-44-R	6 – 3
MC73-481-R	6 – 3
MC73-481-RE/3	6 – 3
MC73-48-R/RSi	6 – 3
MC73-48-RE1/2/3	6 – 3
MC73-881-R	6 – 3
MC73-881-RE/3	6 – 3
MC73-88-R	6 – 3
MC73-88T	6 – 3
MC75-441-R	6 – 3
MC75-44-R	6 – 3
MC82-2425	7 – 2
MC82-2450	7 – 2
MC83-2SA1	7 – 2
MC83-4Si	7 – 2
MK1-11-R/230VAC	1 – 27
MK1-11-R/24VDC	1 – 27
MK1-22N-Ex0/24VDC	1 – 33
MK1-22P-Ex0/24VDC	1 – 33
MK1-22-R/230VAC	1 – 31
MK1-22-R/24VDC	1 – 31
MK1-2AP/24VDC	1 – 29
MK1-2RP/24VDC	1 – 29
MK13-11Ex0-R/230VAC	1 – 43
MK13-11Ex0-R/24VDC	1 – 43
MK13-11Ex0-T/230VAC	1 – 45
MK13-11Ex0-T/24VDC	1 – 45
MK13-121Ex0-R/230VAC	1 – 53
MK13-121Ex0-R/24VDC	1 – 53
MK13-121Ex0-T/230VAC	1 – 55
MK13-121Ex0-T/24VDC	1 – 55
MK13-12Ex0-DZ/230VAC	1 – 51
MK13-12Ex0-R/230VAC	1 – 47
MK13-12Ex0-R/24VDC	1 – 47
MK13-12Ex0-T/230VAC	1 – 49
MK13-12Ex0-T/24VDC	1 – 49
MK13-22Ex0-R/230VAC	1 – 59
MK13-22Ex0-R/24VDC	1 – 59
MK13-22Ex0-T/230VAC	1 – 61

Type	page
MK13-22Ex0-T/24VDC	1 – 61
MK13-22N-Ex0/24VDC	1 – 57
MK13-22P-Ex0/230VAC	1 – 57
MK13-231Ex0-R/230VAC	1 – 63
MK13-231Ex0-R/24VDC	1 – 63
MK13-231Ex0-T/230VAC	1 – 65
MK13-231Ex0-T/24VDC	1 – 65
MK13-33Ex0-R/230VAC	1 – 67
MK13-33Ex0-R/24VDC	1 – 67
MK13-33Ex0-T/230VAC	1 – 69
MK13-33Ex0-T/24VDC	1 – 69
MK13-451Ex0-R/230VAC	1 – 71
MK13-451Ex0-R/24VDC	1 – 71
MK13-451Ex0-T/230VAC	1 – 73
MK13-451Ex0-T/24VDC	1 – 73
MK13-N-Ex0/24VDC	1 – 35
MK13-NF-Ex0/24VDC	1 – 37
MK13-P-Ex0/24VDC	1 – 35
MK13-PF-Ex0/24VDC	1 – 37
MK13-PN-Ex0/24VDC	1 – 39
MK13-R-Ex0/24VDC	1 – 41
MK15-12Ex0-PN	1 – 75
MK21-122Ex0-R	2 – 9
MK21-122Ex0-Ri	2 – 13
MK21-122-R	2 – 7
MK21-122-Ri	2 – 11
MK26-22-R/230VAC	2 – 15
MK26-22-R/24VDC	2 – 15
MK31-...Ex0-Li/24VDC	3 – 13
MK31-...Ex0-LU/24VDC	3 – 13
MK31-...-Li/24VDC	3 – 15
MK31-...-LU/24VDC	3 – 15
MK31-114Ex0-LU/24VDC	3 – 17
MK32-11Ex0-Li/24VDC	3 – 21
MK32-11-Li/24VDC	3 – 23
MK33-11Ex-HLi	3 – 31
MK33-11Ex0-Li-/24VDC	3 – 33
MK33-11Ex0-PLi/24VDC	3 – 35
MK35-11Ex-HLi	3 – 53
MK35-11Ex0-Li/24VDC	3 – 55
MK35-11Ex0-LU/24VDC	3 – 57
MK43-111-R/230VAC	4 – 7
MK43-111-R/24VDC	4 – 7
MK44-121-R/230VAC	4 – 9
MK44-121-R/24VUC	4 – 9
MK71-T12-250VDC/250VDC	6 – 5
MK71-T12-60VDC/250VDC	6 – 5
MK72-S01-Ex/24VDC	5 – 10
MK72-S02-Ex/24VDC	5 – 10
MK72-S03-Ex/24VDC	5 – 11
MK72-S04-Ex/24VDC	5 – 11
MK72-S05-Ex/24VDC	5 – 12
MK72-S06-Ex/24VDC	5 – 12
MK72-S07-Ex/24VDC	5 – 13
MK72-S08-Ex/24VDC	5 – 13
MK72-S09-Ex0/24VDC	5 – 15
MK72-S10-Ex0/24VDC	5 – 18
MK72-S11-Ex0/24VDC	5 – 18
MK72-S12-Ex0/24VDC	5 – 19
MK72-S13-Ex0/24VDC	5 – 19
MK72-S14-Ex0/24VDC	5 – 20

Type	page
MK72-S15-Ex0/24VDC	5 – 20
MK72-S16-Ex0/24VDC	5 – 21
MK72-S17-Ex0/24VDC	5 – 21
MK72-S18-Ex0/24VDC	5 – 22
MK72-S19-Ex0/24VDC	5 – 22
MK72-S20-Ex0/24VDC	5 – 23
MK72-S21-Ex0/24VDC	5 – 23
MK72-S22-Ex0/24VDC	5 – 24
MK73-12-R.../K10	6 – 13
MK73-R11/230VAC	6 – 15
MK73-R111-Ex0	6 – 9
MK73-R11H/24VUC	6 – 17
MK73-R12/230VAC	6 – 19
MK73-R12/24VUC	6 – 19
MK73-R14/24VUC	6 – 21
MK73-R22/24VUC	6 – 23
MK73-R222-Ex0	6 – 9
MK73-R22A	6 – 11
MK73-R22E	6 – 11
MK73-R44A	6 – 11
MK73-R44E	6 – 11
MK73-S01/24VDC	6 – 25
MK73-S02/24VDC	6 – 27
MK73-T22A	6 – 11
MK73-T22A.../K20	6 – 11
MK73-T22E	6 – 11
MK73-T44A	6 – 11
MK73-T44A.../K20	6 – 11
MK73-T44E	6 – 11
MK73-UR12/K03/24VDC	6 – 29
MK73-Z22A	6 – 11
MK73-Z44A	6 – 11
MK81-11-R/24VDC	7 – 3
MK81-222-R/230VAC	7 – 5
MK81-222-R/24VDC	7 – 5
MK82-2401/230VUC	7 – 15
MK83-U24	7 – 17
MK91-121-R/230VAC	8 – 9
MK91-121-R/24VDC	8 – 9
MK91-12-R/230VAC	8 – 7
MK91-12-R/24VDC	8 – 7
MK91-R11/24VDC	8 – 5
MS1-12Ex0-R	1 – 77
MS1-22Ex0-R	1 – 79
MS1-33Ex0-R	1 – 81
MS1-33Ex0-T	1 – 83
MS13-11Ex0-T	1 – 85
MS13-12Ex0-R	1 – 87
MS13-12Ex0-T	1 – 89
MS13-22Ex0-R	1 – 91
MS13-22Ex0-T	1 – 93
MS13-231Ex0-R	1 – 95
MS13-231Ex0-T	1 – 97
MS13-33Ex0-R	1 – 99
MS13-33Ex0-T	1 – 101
MS21-12Ex0-R	2 – 17
MS22-Ri	2 – 19
MS23-22Ex0-R	2 – 23
MS23-R	2 – 21
MS24-112-R	2 – 27
MS24-R	2 – 25

Type	page
MS25-Ui	2 – 29
MS27-R	2 – 31
MS28-R	2 – 33
MS31-LiU/230VAC	3 – 19
MS31-LiU/24VDC	3 – 19
MS41-12Ex0-R	4 – 11
MS41-22Ex0-R	4 – 13
MS41-42Ex0-R	4 – 17
MS43-R	4 – 21
MS81-221-R/115VAC	7 – 7
MS81-221-R/230VAC	7 – 7
MS81-222-R/115VAC	7 – 9
MS81-222-R/230VAC	7 – 9
MS81-222-T/115VAC	7 – 11
MS81-222-T/230VAC	7 – 11
MS91-12-R	8 – 11
PB-08/03	9 – 13
PB-16/03	9 – 13
PB-32/03	9 – 13
TRC-P1	9 – 5
WM1	9 – 3

TURCK

Industrial Automation

TURCK WORLD-WIDE HEADQUARTERS

GERMANY
Hans Turck GmbH & Co. KG
Witzlebenstraße 7
45472 Mülheim an der Ruhr
P. O. Box 45466 Mülheim an der Ruhr
Phone (+49) (208) 4952-0
Fax (+49) (208) 4952-2 64
E-Mail turckmh@mail.turck-globe.de

BELGIUM
Multiprox N. V.
P. B. 71
Lion d'Orweg 12
9300 Aalst
Phone (+32) (53) 766566
Fax (+32) (53) 783977
E-Mail mail@multiprox.be

BRAZIL
TURCK Ltda.
Rua Apucarana 134
83324-040 Pinhais
Phone (+55) (41) 6682053
Fax (+55) (41) 6681794
E-Mail turck@turck.com.br

CZECH REPUBLIC
TURCK s.r.o.
Hradecká 1151
500 03 Hradec Králové 3
Phone (+ 420) (49) 5 51 87 66
Fax (+ 420) (49) 5 51 87 67
E-Mail turck@turck.cz

PR OF CHINA
TURCK (Tianjin) Sensor Co. Ltd.
40, Yibin Road/Nankai District
300113 Tianjin
Phone (+86) (22) 27623140
Fax (+86) (22) 27614650
E-Mail turcktj@public1.tpt.tj.cn

EASTERN EUROPE / ASIA
Hans Turck GmbH & Co. KG
Am Bockwald 2
08340 Beierfeld
Phone (+49) (3774) 1 35-0
Fax (+49) (3774) 1 35-2 22

FRANCE
TURCK BANNER S.A.S
3, Rue de Courtalin
Magny-Le-Hongre
77703 Marne-La-Vallee Cedex 4
Phone (+33) (1) 60436070
Fax (+33) (1) 60431018
E-Mail info@turckbanner.fr

GREAT BRITAIN
TURCK BANNER LIMITED
Blenheim House
Hurricane Way
Wickford, Essex SS11 8YT
Phone (+44) (1268) 578888
Fax (+44) (1268) 763648
E-Mail info@turckbanner.co.uk

HUNGARY
TURCK Hungary kft.
Könyves Kalman Krt.76
1087. Budapest
Phone (+36) (1) 4770740
Fax (+36) (1) 4770741
E-Mail turck@turck.

ITALY
TURCK BANNER S. R. L.
Via Adamello, 9
20010 Bareggio (MI)
Phone (+39) (02) 90364291
Fax (+39) (02) 90364838
E-Mail info@turckbanner.it

KOREA
Turck Korea Branch Office
Room No 406, Gyeonggi Technopark
1271-11, Sa 1-Dong, Sangnok-Gu, Ansan,
Gyeonggi-Do, Korea, 426-901
Phone (+82) (31) 5 00 45 55
Fax (+82) (31) 5 00 45 58
E-Mail sensor@sensor.co.kr

THE NETHERLANDS
TURCK B. V.
Postbus 297
8000 AG Zwolle
Phone (+31) (38) 4227750
Fax (+31) (38) 4227451
E-Mail info@turck.nl

POLAND
Turck sp.z o.o
ul. Kepska 2
45-129 Opole
Phone (+48) (77) 4434800
Fax (+48) (77) 4434801
E-Mail turck@turck.pl

ROMANIA
TURCK Automation Romania SRL
Str. Iuliu Tetrat nr. 18 Sector 1
011914 Bukarest
Phone (+40) (21) 2 30 02 79
2 30 05 94
Fax (+40) (21) 2 31 40 87
E-Mail: info@turck.ro

RUSSIA
TURCK Avtomatizazija O.O.O
Volokolamskoe Shosse 1 office 606 a
125080 Moskau
Phone (+7) (095) 1 05 00 54
Fax (+7) (095) 1 58 95 72
E-Mail turck@turck.ru

SPAIN
ELION
C/Farell,5
08014 Barcelona
Phone (+34) 932 982 000
Fax (+34) 932.982.048
E-Mail: elion@elion.es

USA
TURCK Inc.
3000 Campus Drive
Minneapolis, MN 55441-2656
Phone (+1) (763) 553-9224
553-7300
Fax (+1) (763) 553-0708
E-Mail mailbag@turck.com

... and more than 60 representatives and agencies world-wide.

www.turck.com

D200423 0304

Subject to change without notice